Table of contents

Table of Contents 1

Usage Notice 2
- Safety Information 2
- Precautions 3
- Eye Safety Warnings 5

Introduction 6
- Package Overview 6
- Product Overview 7
  - Main Unit 7
  - Control Panel 8
  - Input / Output Connections 9
  - Remote Control 10

Installation 11
- Connecting the Projector 11
  - Connect to Computer/Notebook 11
  - Connect to Video Sources 12
- Powering On/Off the Projector 13
  - Powering On the Projector 13
  - Powering Off the projector 14
  - Warning Indicator 14
- Adjusting the Projected Image 15
  - Adjusting the Projector's Height 15
  - Adjusting the Projector's Zoom / Focus 16
  - Adjusting Projected Image Size 16

User Controls 17
- Control Panel & Remote Control 17
  - Control Panel 17
  - Remote Control 18
- On-screen Display Menus 20
  - How to operate 20
  - Menu Tree 21
  - IMAGE 24
  - DISPLAY 26
  - SYSTEM 30
  - SETUP 34

Appendices 38
- Troubleshooting 38
  - Image Problems 38
  - Other Problems 39
  - Projector Status Indication 40
  - Remote Control Problems 41
- Replacing the Lamp 42
- Compatibility Modes 44
- Ceiling Mount Installation 46
- Optoma Global Offices 47
- Regulation & Safety notices 49

English

Safety Information

	The lightning flash with arrow head within an equilateral triangle is intended to alert the user to the presence of uninsulated “dangerous voltage” within the product’s enclosure that may be of sufficient magnitude to constitute a risk of electric shock to persons.
	The exclamation point within an equilateral triangle is intended to alert the user to the presence of important operating and maintenance (servicing) instructions in the literature accompanying the appliance.

WARNING: TO REDUCE THE RISK OF FIRE OR ELECTRIC SHOCK, DO NOT EXPOSE THIS APPLIANCE TO RAIN OR MOISTURE. DANGEROUS HIGH VOLTAGES ARE PRESENT INSIDE THE ENCLOSURE. DO NOT OPEN THE CABINET. REFER SERVICING TO QUALIFIED PERSONNEL ONLY.

Class B emissions limits

This Class B digital apparatus meets all requirements of the Canadian Interference-Causing Equipment Regulations.

Important Safety Instruction

1. Do not block any ventilation openings. To ensure reliable operation of the projector and to protect from over heating, it is recommended to install the projector in a location that does not block ventilation. As an example, do not place the projector on a crowded coffee table, sofa, bed, etc. Do not put the projector in an enclosure such as a book case or a cabinet that restricts air flow.
2. Do not use the projector near water or moisture. To reduce the risk of fire and/or electric shock, do not expose the projector to rain or moisture.
3. Do not install near heat sources such as radiators, heaters, stoves or any other apparatus such as amplifiers that emits heat.
4. Clean only with dry cloth.
5. Only use attachments/accessories specified by the manufacturer.
6. Do not use the unit if it has been physically damaged or abused. Physical damage/abuse would be (but not limited to):
   - Unit has been dropped.
   - Power supply cord or plug has been damaged.
   - Liquid has been spilled on to the projector.
   - Projector has been exposed to rain or moisture.
   - Something has fallen in the projector or something is loose inside.

   Do not attempt to service the unit yourself. Opening or removing covers may expose you to dangerous voltages or other hazards. Please call Optoma before you send the unit for repair.
7. Do not let objects or liquids enter the projector. They may touch dangerous voltage points and short out parts that could result in fire or electric shock.
8. See projector enclosure for safety related markings.
9. The unit should only be repaired by appropriate service personnel.

Precautions

Please follow all warnings, precautions and maintenance as recommended in this user's guide.

- Warning- Do not look into the projector's lens when the lamp is on. The bright light may hurt your eyes.
- Warning- To reduce the risk of fire or electric shock, do not expose this projector to rain or moisture.
- Warning- Please do not open or disassemble the projector as this may cause electric shock.
- Warning- When replacing the lamp, please allow the unit to cool down. Follow instructions as described on pages 42-43.
- Warning- This projector will detect the life of the lamp itself. Please be sure to change the lamp when it shows warning messages.
- Warning- Reset the "Lamp Reset" function from the on-screen display "System | Lamp Settings" menu after replacing the lamp module (refer to page 33).
- Warning- When switching the projector off, please ensure the cooling cycle has been completed before disconnecting power. Allow 90 seconds for the projector to cool down.
- Warning- Do not use lens cap when projector is in operation.
- Warning- When the lamp is approaching the end of its lifetime, the message "Replacement suggested" will show on the screen. Please contact your local reseller or service center to change the lamp as soon as possible.

Note

- When the lamp reaches the end of its life, the projector will not turn back on until the lamp module has been replaced. To replace the lamp, follow the procedures listed under "Replacing the Lamp" section on pages 42-43.

Usage Notice

Do:

- Turn off and unplug the power plug from the AC outlet before cleaning the product.
- Use a soft dry cloth with mild detergent to clean the display housing.
- Disconnect the power plug from AC outlet if the product is not being used for a long period of time.

Do not:

- Block the slots and openings on the unit provided for ventilation.
- Use abrasive cleaners, waxes or solvents to clean the unit.
- Use under the following conditions:
  - In extremely hot, cold or humid environments.
    - Ensure that the ambient room temperature is within 5 - 35°C.
    - Relative Humidity is 5 - 35°C, 80% (Max.), non-condensing.
  - In areas susceptible to excessive dust and dirt.
  - Near any appliance generating a strong magnetic field.
  - In direct sunlight.

Eye Safety Warnings

- Avoid staring/facing directly into the projector beam at all times. Keep your back to the beam as much as possible.
- When projector is used in a classroom, adequately supervise students when they are asked to point out something on the screen.
- In order to minimize the lamp power, use room blinds to reduce ambient light levels.

Package Overview

Unpack and inspect the box contents to ensure all parts listed below are in the box. If something is missing, please contact your nearest customer service center.

Projector with lens cap

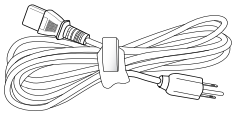

Power Cord 1.8m

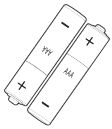

2 × AAA Batteries

IR Remote Control

Note

- Due to different applications in each country, some regions may have different accessories.

Documentation :

- ☑ User's Manual
- ☑ Warranty Card
- ☑ Quick Start Card
- ☑ WEEE Card (for EMEA only)

Product Overview

Main Unit

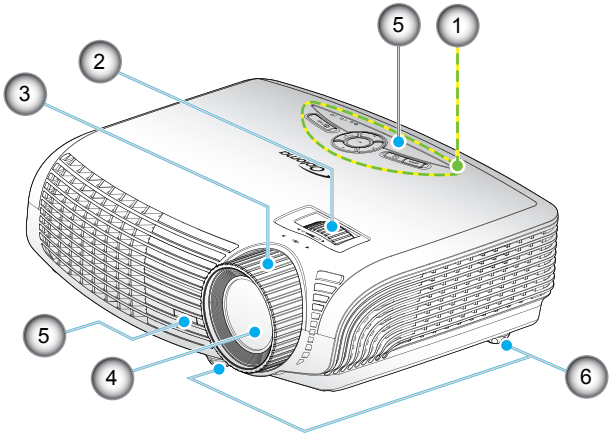

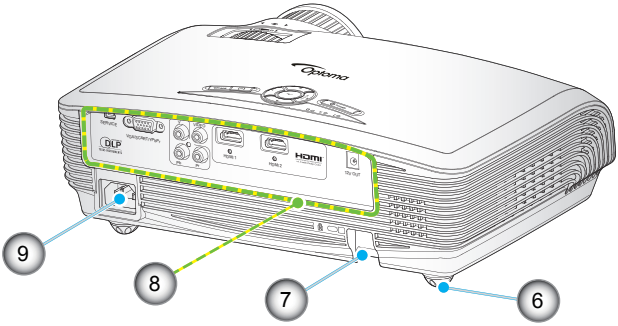

1. Control Panel
2. Zoom Ring
3. Focus Ring
4. Zoom Lens
5. IR Receivers
6. Tilt-Adjustment Feet
7. Security Bar
8. Input / Output Connections
9. Power Socket

Control Panel

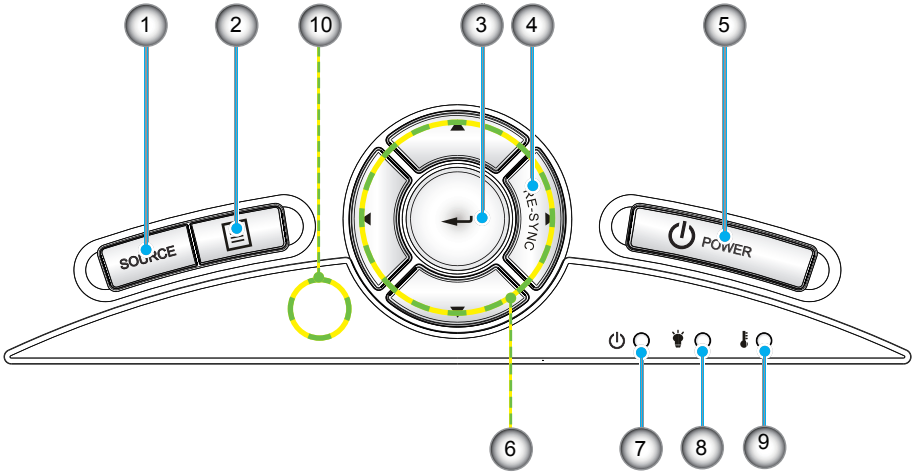

1. Source
2. Menu
3. Enter
4. Re-Sync
5. Power
6. Four Directional Select Keys
7. On/Standby LED
8. Lamp Fail LED
9. Temp LED
10. IR Receiver

Input / Output Connections

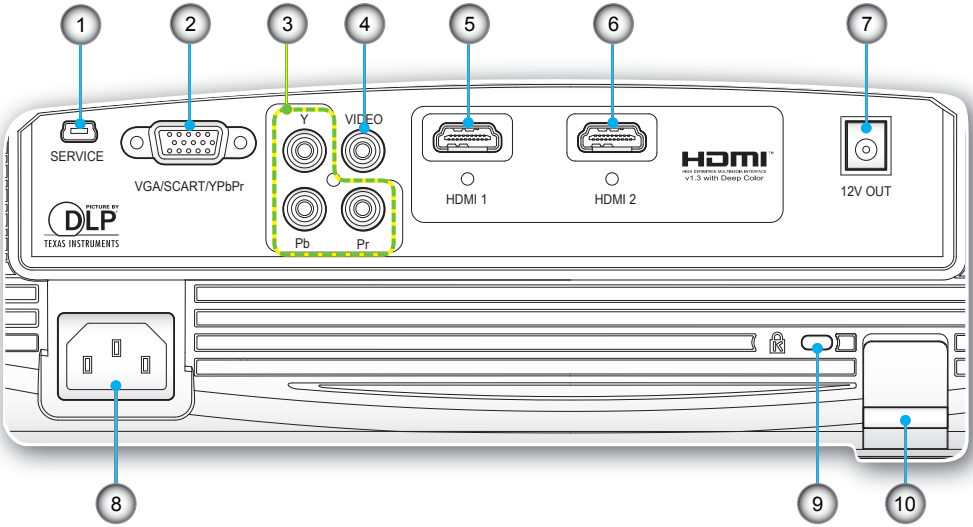

1. Service Connector
2. VGA/SCART Connector
   (PC Analog Signal/Component Video Input/HDTV/SCART)
3. Component Video Input Connectors
4. Composite Video Input Connector
5. HDMI 1 Connector
6. HDMI 2 Connector
7. 12V Trigger Relay Connector
8. Power Socket
9. Kensington™ Lock Port
10. Security Bar

Note

- "12V OUT" is only for trigger control. Not a power supplier port.
- "12V OUT" is activated when the projector is turned on and continues to stay on till you turn off the projector.

Remote Control

1. Power On
2. Power Off
3. 16:9
4. Native
5. Contrast
6. Overscan
7. Enter
8. Re-Sync
9. D-Sub Source
10. Video Source
11. HDMI 2 Source
12. YPbPr Source
13. HDMI 1 Source
14. Menu
15. Source
16. Source Lock
17. EdgeMask
18. Brightness
19. LBX
20. 4:3
21. Lamp Mode
22. Mode
23. Four Directional Select Keys

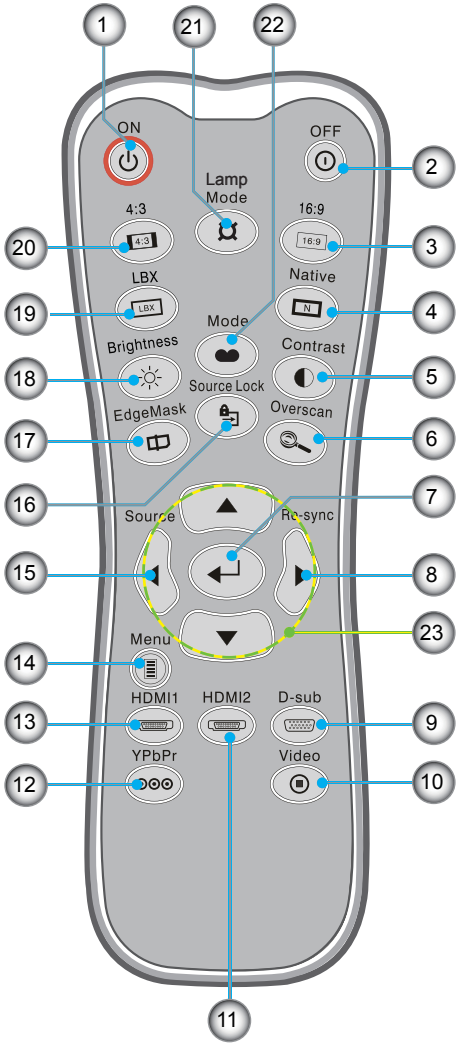

Connecting the Projector

Connect to Computer/Notebook

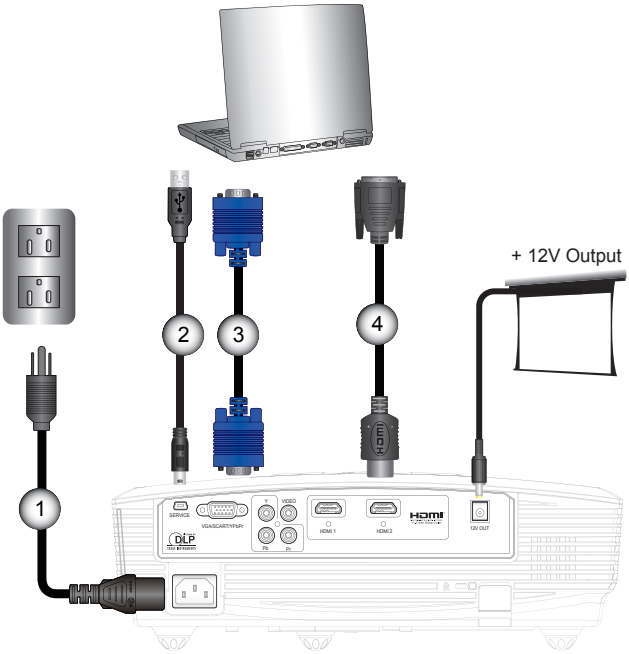

Note

- "12V OUT" is only for trigger control. Not a power supplier port.
- "12V OUT" is activated when the projector is turned on and continues to stay on till you turn off the projector.

Note

- Due to the difference in applications for each country, some regions may have different accessories.
- (*) Optional accessory

1.....Power Cord
2.....*USB Cable
3..... *VGA Cable
4.....*DVI/HDMI Cable

Connect to Video Sources

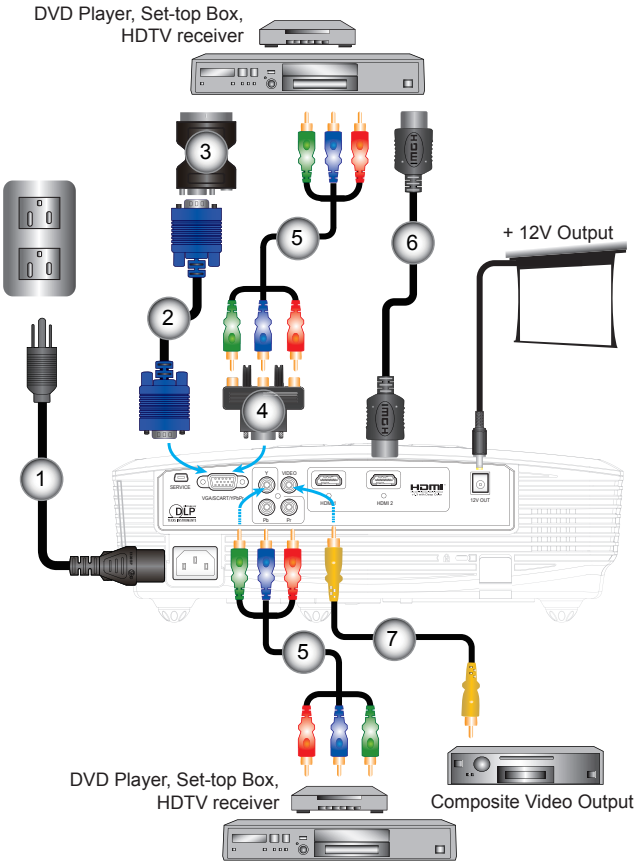

Note

- "12V OUT" is only for trigger control. Not a power supplier port.
- "12V OUT" is activated when the projector is turned on and continues to stay on till you turn off the projector.

Note

- Due to the difference in applications for each country, some regions may have different accessories.
- (*) Optional accessory

1	Power Cord
2	*VGA Cable
3	*SCART/VGA Adaptor
4	*15-Pin to 3 RCA Component/HDTV Adaptor
5	*3 RCA Component Cable
6	*HDMI Cable
7	*Composite Video Cable

Powering On/Off the Projector

Powering On the Projector

1. Remove the lens cap. ❶
2. Securely connect the power cord and signal cable. When connected, the ON/STANDBY LED will turn Amber.
3. Turn on the lamp by pressing "⏻" button either on the top of the projector or on the remote. The ON/STANDBY LED will now turn Green. ❷

   The startup screen will display in approximately 10 seconds. The first time you use the projector, you can select your preferred language from quick menu after the startup screen displays.
4. Turn on and connect the source that you want to display on the screen (computer, notebook, video player, etc). The projector will detect the source automatically. If not, push menu button and go to "SETUP".
   Make sure that the "Source Lock" has been set to "Off".

❖ If you connect multiple sources at the same time, press the "SOURCE" button on the control panel or direct source keys on the remote control to switch between inputs.

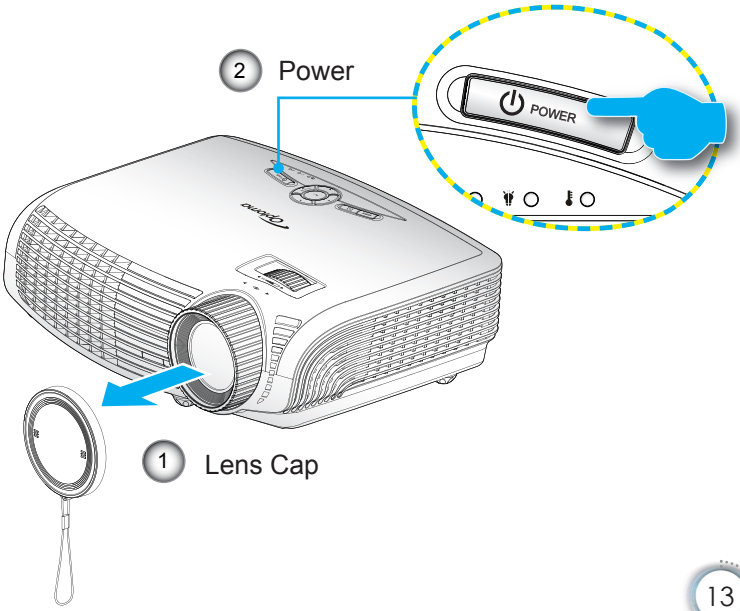

Note

❖ Turn on the projector first and then select the signal sources.

Powering Off the Projector

1. Press the "⏻" button on the remote control or "⏻" button on the control panel of the projector two times with one second interval in between to turn off the projector. First push of button will display the following message on the screen.

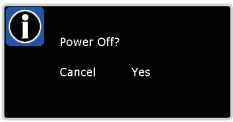

   Press the "⏻" button (or the "⏻" button) again to confirm the shut down. If the button is not pressed, the message will disappear after 15 seconds.
2. The cooling fans continue to operate for about 60 seconds for cooling cycle and the ON/STANDBY LED will Flash Green. When the ON/STANDBY LED lights solid Amber, the projector has entered standby mode.

   If you wish to turn the projector back on, you must wait until the projector has completed the cooling cycle and has entered standby mode. Once in standby mode, simply press "⏻" button to restart the projector.
3. Disconnect the power cord from the electrical outlet and the projector.
4. Do not turn on the projector immediately following a power off procedure.

Note

- Contact the nearest service center if the projector displays these symptoms. See pages 47-48 for more information.

Warning Indicator

- When the "LAMP" indicator lights Red ("ON/STANDBY" indicator flashes Amber), the projector will automatically shut down. Please contact your nearest service center for assistance.
- When the "TEMP" indicator lights Red ("ON/STANDBY" indicator flashes Amber), it indicates the projector has overheated. The projector will shut down automatically. Under normal conditions, the projector can be switched on again after it has cooled down.
- When the "TEMP" indicator flashes Red ("ON/STANDBY" indicator flashes Amber), it indicates the fan has failed.

Adjusting the Projected Image

Adjusting the Projector's Height

The projector is equipped with elevator feet for adjusting the image height.

1. Locate the adjustable foot you wish to modify on the underside of the projector.
2. Rotate the adjustable ring counter clockwise to raise the projector or clockwise to lower it. Repeat with the remaining feet as needed.

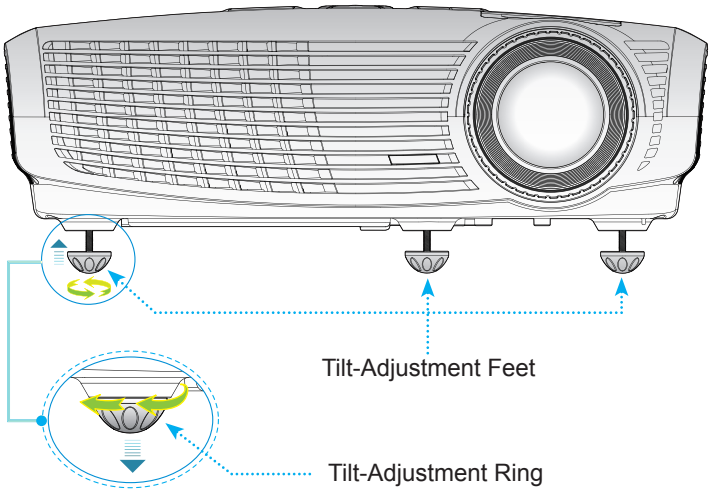

Adjusting the Projector's Zoom / Focus

You may turn the zoom ring to zoom in or out. To focus the image, rotate the focus ring until the image is clear.
The projector will focus at distances from 4.89 to 32.68 feet (1.49 to 9.96 meters).

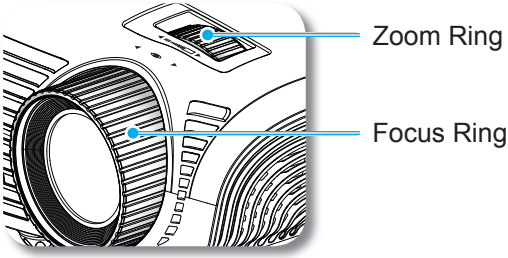

Adjusting Projection Image Size

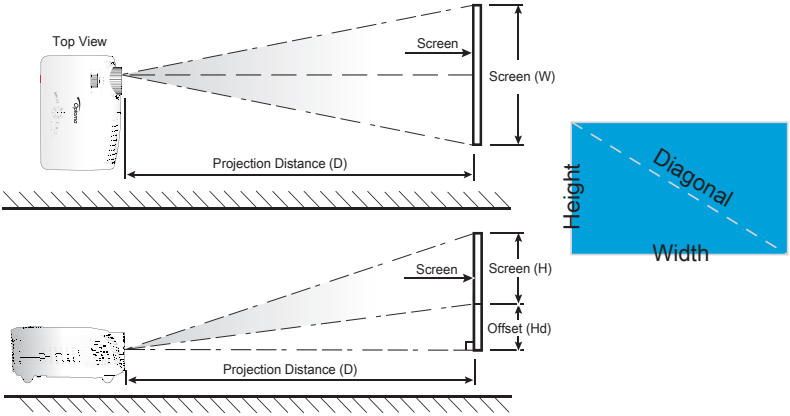

Diagonal length (inch) size of 16:9 Screen	Screen Size W X H				Projection distance (D)				Offset (Hd)	
	(m)		(feet)		(m)		(feet)			
	Width	Height	Width	Height	wide	tele	wide	tele	(m)	(feet)
38	0.84	0.47	2.76	1.55	-	1.51	-	4.97	0.08	0.25
45	1.00	0.56	3.27	1.84	1.49	1.79	4.89	5.88	0.09	0.29
50	1.11	0.62	3.63	2.04	1.66	1.99	5.45	6.54	0.10	0.33
60	1.33	0.75	4.36	2.45	1.99	2.39	6.54	7.84	0.12	0.39
70	1.55	0.87	5.08	2.86	2.32	2.79	7.63	9.15	0.14	0.46
80	1.77	1.00	5.81	3.27	2.66	3.19	8.72	10.46	0.16	0.52
90	1.99	1.12	6.54	3.68	2.99	3.59	9.81	11.77	0.18	0.59
100	2.21	1.25	7.26	4.09	3.32	3.98	10.89	13.07	0.20	0.65
120	2.66	1.49	8.72	4.90	3.98	4.78	13.07	15.69	0.24	0.78
150	3.32	1.87	10.89	6.13	4.98	5.98	16.34	19.61	0.30	0.98
200	4.43	2.49	14.53	8.17	6.64	7.97	21.79	26.15	0.40	1.31
300	6.64	3.74	21.79	12.26	9.96	-	32.68	-	0.60	1.96

❖ This table is for user's reference only.

Control Panel & Remote Control

There are two ways for you to control the functions: Control Panel and Remote Control.

Control Panel

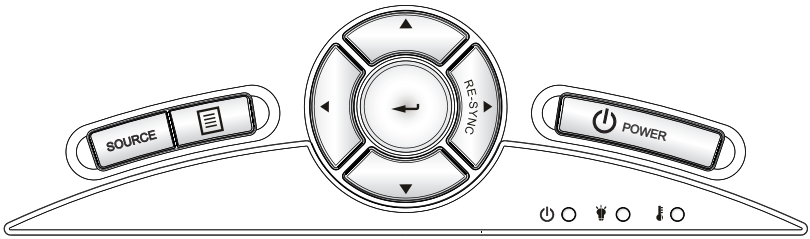

Using the Control Panel	
Power	Refer to the “Power On/Off the Projector” section on pages 13-14.
RE-SYNC	Automatically synchronize the projector to the input source.
Enter	Confirm your item selection.
SOURCE	Press “SOURCE” to select an input signal.
Menu	Press “Menu” to launch the on-screen display (OSD) menu. To exit OSD, Press “Menu” again.
Four Directional Select Keys	Use ▲ ▼ ◀ ▶ to select items or make adjustments to your selection.
Lamp LED	Indicate the projector’s lamp status.
Temp LED	Indicate the projector’s temperature status.
On/Standby LED	Indicate the projector’s status.

Remote Control

Using the Remote Control

Power On	⏻	Refer to the “Power On” section on page 13.
Power Off	⏻	Refer to the “Power On/Off the Projector” section on page 14.
Lamp Mode		Increase the brightness of the image. (refer to page 33)
Mode		Select the display mode from Cinema, Bright, Photo, Reference and User.
4:3	4:3	Scale the image at a 4:3 aspect ratio.
16:9	16:9	Scale the image at a 16:9 aspect ratio.
LBX	LBX	Enable the viewing of the letterboxed nonanamorphically enhanced movie at full screen width. Part of the original image will be lost if the image aspect ratio is less than 2.35:1.
Native	N	The input source will be displayed without scaling.
Brightness		Adjust the brightness of the image.
Contrast		Control the degree of difference between the lightest and darkest parts of the picture.
EdgeMask		Mask off a few pixels on each edge of the image to be displayed. Use this function to adjust if image source happens to have noise near any edge of the display image.
Source Lock		Select auto detection all connector ports or lock current connector port.
Overscan		Mask off a few pixels on each edge of the image to be displayed. Use the function to adjust if image source happens to have noise near any edge of the display image.

Remote Control

Using the Remote Control

Enter		Confirm your item selection.
Source		Press “Source” to select an input signal.
Re-sync		Automatically synchronizes the projector to the input source.
Menu		Display or exit the on-screen display menus for projector.
HDMI 1		Press “HDMI 1” to choose source from HDMI 1 connector.
HDMI 2		Press “HDMI 2” to choose source from HDMI 2 connector.
D-Sub		Press “D-Sub” to choose source from VGA/SCART/YPbPr connector.
YPbPr		Press “YPbPr” to choose Component video source.
Video		Press “Video” to choose Composite video source.
Four Directional Select Keys		Use ▲ ▼ ◀ ▶ to select items or make adjustments to your selection.

On-screen Display Menus

The Projector has multilingual On-screen Display menus that allow you to make image adjustments and change a variety of settings. The projector will automatically detect the source.

How to operate

1. To open the OSD menu, press “Menu” on the Remote Control or Projector Keypad.
2 When OSD is displayed, use ◀ ▶ keys to select any item in the main menu. While making a selection on a particular page, press ▼ or “Enter” key to enter sub menu.
3. Use ▲ ▼ keys to select the desired item and adjust the settings using ◀ ▶ key.
4. Select the next item to be adjusted in the sub menu and adjust as described above.
5. Press “Enter” to confirm, and the screen will return to the main menu.
6. To exit, press “Menu” again. The OSD menu will close and the projector will automatically save the new settings.

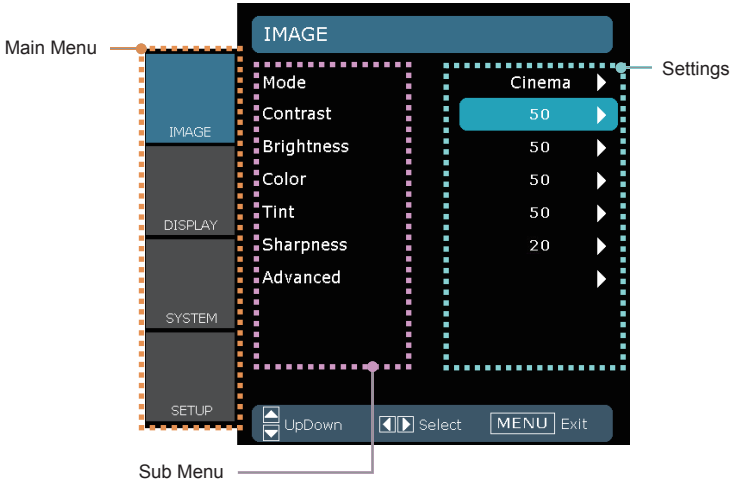

Menu Tree

- **IMAGE**
  - Mode — Cinema/Bright/Photo/Reference/User
  - Contrast
  - Brightness
  - Color
  - Tint
  - Sharpness
  - Advanced
- **IMAGE | ADVANCED**
  - Noise Reduction
  - Gamma
  - # B/W Extension — On/Off
  - Color Temp. — Warm/Medium/Cold
  - RGB Gain/Bias
- **IMAGE | ADVANCED | GAMMA**
  - Film — Curve Type/Offset/Reset
  - Video — Curve Type/Offset/Reset
  - Graphics — Curve Type/Offset/Reset
  - Standard — Curve Type/Offset/Reset
- **IMAGE | ADVANCED | RGB Gain/Bias**
  - Red Gain
  - Green Gain
  - Blue Gain
  - Red Bias
  - Green Bias
  - Blue Bias
- **DISPLAY**
  - Format — 4:3/16:9/LBX/Native
  - Overscan
  - Edge Mask
  - V Image Shift
  - V Keystone
  - SuperWide — On/Off/AUTO
- **SYSTEM**
  - Menu Location
  - Lamp Settings
  - Projection
  - Image AI — On/Off
  - Test Pattern — None/Grid/White
  - Background Color — Dark Blue/Black/Gray
  - 12V Trigger — On/Off
- **SYSTEM | LAMP SETTINGS**
  - Lamp Hours
  - Lamp Reminder — On/Off
  - Bright Mode — On/Off
  - Lamp Reset — No/Yes
- **SETUP**
  - Language — English/Deutsch/Français/Italiano/Español/Português/Polski/Nederlands/Русский/Suomi/Svenska/Norsk/Dansk/ελληνικά/Magyar/Čeština/中文(繁體)/中文(简体)/日本語/한국어/عربي/Türkçe
  - Input Source — HDMI 1/HDMI 2/VGA/Component/Video
  - Source Lock — On/Off
  - High Altitude — On/Off
  - Auto Power Off (min)
  - * Signal — Phase/Tracking/H. Position/V. Position (RGB); White Level/Black Level/Saturation/Hue/**IRE (Video)
  - Color Space — RGB/YCbCr
  - Reset — Current/All

Note

- (#) “B/W Extension” can’t support when source is HDMI, analog or digital RGB via DVI port.
- (*) “Signal” is not supported when the source is HDMI or DVI-D.
- (**) “IRE” is only supported on NTSC signal.

IMAGE

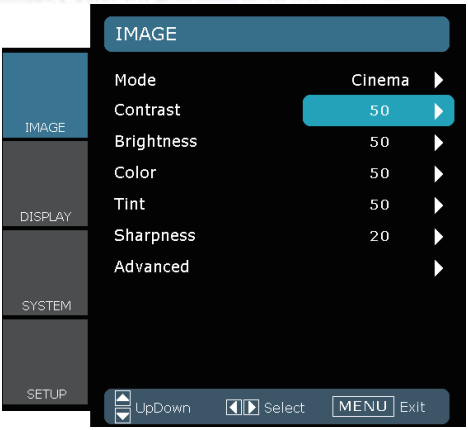

Mode

There are many factory presets optimized for various types of images.

- Cinema: For home theater.
- Bright: Maximum brightness input.
- Photo: Optimized for displaying photographic images.
- Reference: This mode is intended to reproduce, as close as possible, the image the way the movie director intended. Color, color temperature, brightness, contrast and gamma settings are all configured to standard reference levels.
- User: User's settings.

Contrast

The contrast controls the degree of difference between the lightest and darkest parts of the picture.

- Press the ◀ to decrease the contrast.
- Press the ▶ to increase the contrast.

Brightness

Adjust the brightness of the image.

- Press the ◀ to darken image.
- Press the ▶ to lighten the image.

IMAGE

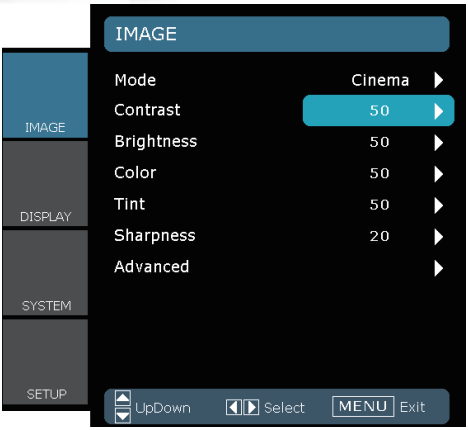

Color

Adjust a video image from black and white to fully saturated color.

- Press the ◀ to decrease the color saturation in the image.
- Press the ▶ to increase the color saturation in the image.

Tint

Adjust the color balance of red and green.

- Press the ◀ to increase the amount of green in the image.
- Press the ▶ to increase the amount of red in the image.

Sharpness

Adjust the sharpness of the image.

- Press the ◀ to decrease the sharpness.
- Press the ▶ to increase the sharpness.

IMAGE | Advanced

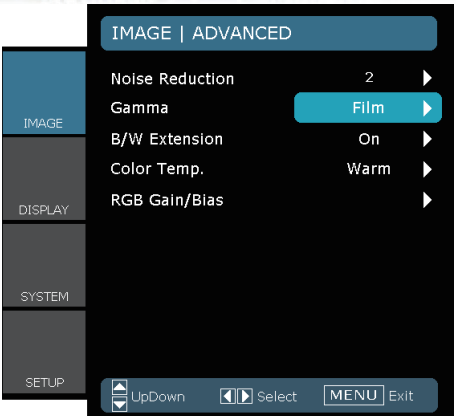

Noise Reduction

The motion Adaptive Noise Reduction reduces the amount of visible noise interlaced signals. The range is from “0” to “10”. (0: Off)

Note

- “B/W Extension” can’t support when source is HDMI, analog or digital RGB via DVI port.

B/W Extension

Black and White Extension can stretch the black and white levels to automatically increase the contrast of input image. This unit has 2 pre-set modes that allow the user to switch among the pre-sets to obtain different image effects. (Off/On)

Color Temp

If set to cold temperature, the image looks more blue. (cold image)
If set to warm temperature, the image looks more red. (warm image)

RGB Gain/Bias

Press ▶ into the next menu as below and then use ▲ or ▼ to select item. Use ◀ or ▶ to select Red, Green, or Blue for brightness (Gain) and contrast (Bias).

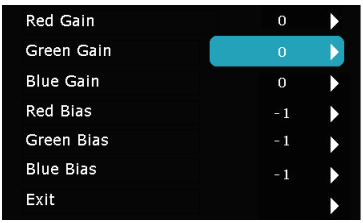

IMAGE | Advanced

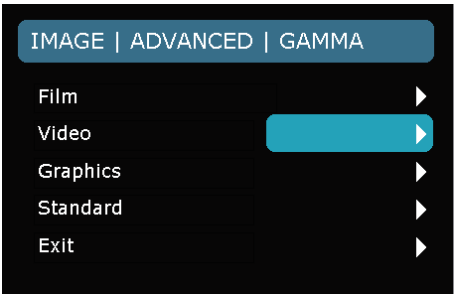

Gamma

This allows you to set up gamma curve type. After the initial setup and fine tuning is completed, utilize the Gamma Adjustment steps to optimize your image output.

- Film: for home theater.
- Video: for video or TV source.
- Graphics: for image source.
- Standard: for standardized setting.

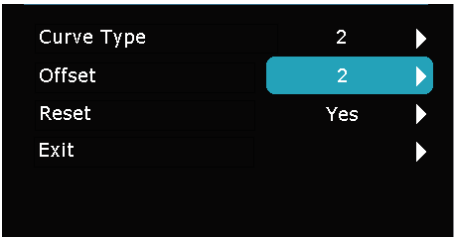

- Curve: The type of gamma curve.
- Offset: The input offset of gamma can range the start level of base point in gamma curve .
- Reset: Choose “Yes” to return the factory default settings for color adjustments.

DISPLAY

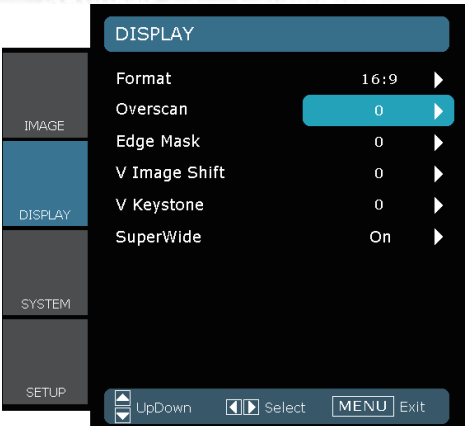

Format

Use this function to choose your desired aspect ratio.

- 4:3: This format is for 4x3 input sources.
- 16:9: This format is for 16x9 input sources, like HDTV and DVD enhanced for Widescreen TV.
- Native: This format displays the original image without any scaling.
- LBX: This format is for non-16x9, letterbox source and for users who use external anamorphic lens to display 2.35:1 aspect ratio using full resolution.

Detail informations about LBX mode :

1. Some Letter-Box DVDs are not enhanced for 16x9 TVs. In this situation, the image will not look right when displayed in 16:9 mode.

   In this situation, please try to using the 4:3 mode to view the DVD.

   If the content is not 4:3, there will be black bars around the image in 16:9 display. For this type of content, you can use LBX mode to fill the image on the 16:9 display.

2. If you use an external anamorphic lens, this LBX mode also allows you to watch a 2.35:1 content (include Anamorphic DVD and HDTV film source) that support anamorphic wide is enhanced for 16x9 Display in a wide 2.35:1 image.

   In this case, there are no black bars. Lamp power and vertical resolution are fully utilized.

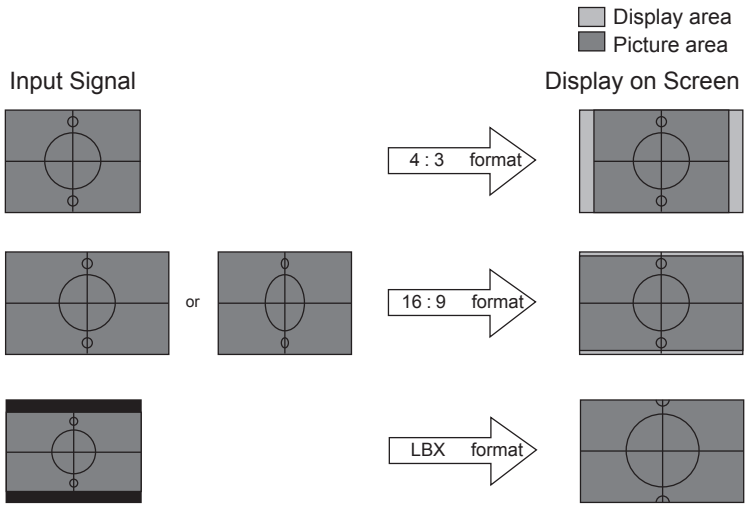

DISPLAY

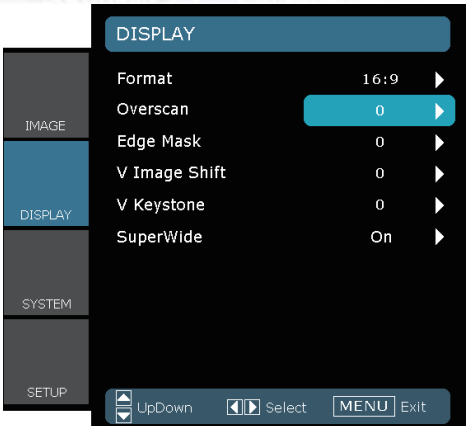

Note

- Each I/O has different setting of "Overscan".
- "Overscan" and "Edge Mask" can't work at same time.

Overscan

Overscan function removes the noise in a video image. Overscan the image to remove video encoding noise on the edge of video source.

Edge Mask

- Press the ◀ to reduce the size of an image.
- Press the ▶ to magnify an image on the projection screen.

V Image Shift

Shift the projected image position vertically.

V Keystone

Press the ◀ or ▶ to adjust image distortion vertically. If the image looks trapezoidal, this option can help make the image rectangular.

DISPLAY

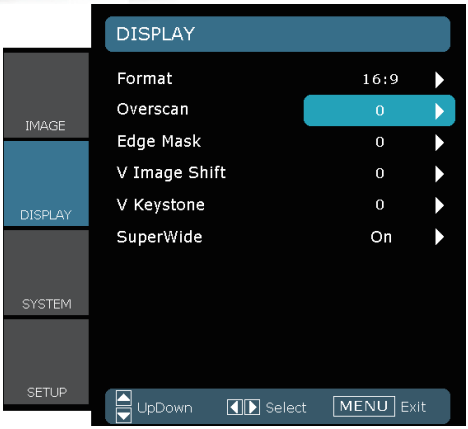

SuperWide

SuperWide is a feature that uses a special 2.0:1 aspect ratio screen enabling both 16:9 and 2.35:1 aspect ratio movies to be shown without black bars at the top and bottom of the screen

- Off: Your desired aspect ratio can be selected - 4:3, 16:9, LBX and Native.
- On: Only formats 4:3 and 16:9 can be selected.
- Auto: To solve the differences of the film formats, the option can keep the format in the same ratio.

Note

- “SuperWide“ is “Off“ as default.

How to use “SuperWide”

1. Obtain a 2.0:1 aspect ratio screen
2. Switch SuperWide ON
3. Align the projector image correctly on the screen
4. Enjoy movies without black bars

SYSTEM

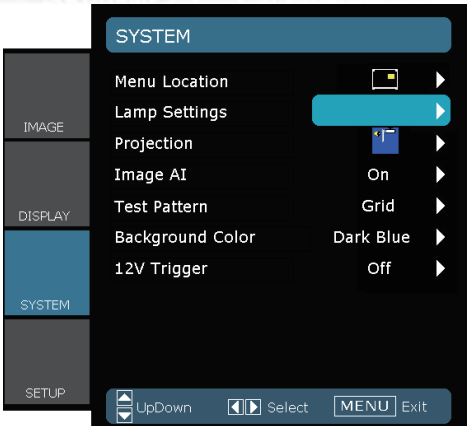

Menu Location

Choose the menu location on the display screen.

Projection

Front-Projection

This is the default selection. The image is projected straight on the screen.

Rear-Desktop

When selected, the image will appear reversed.

Front-Ceiling

When selected, the image will turn upside down.

Rear-Ceiling

When selected, the image will appear reversed in upside down position.

Note

- Rear-Desktop and Rear-Ceiling are to be used with a translucent screen.

SYSTEM

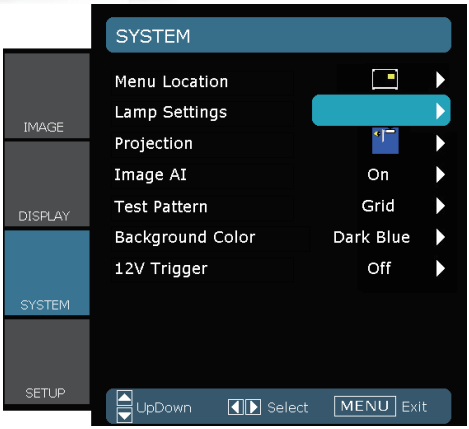

Image AI

Image AI improves the contrast of the picture by optimizing the brightness of the lamp according to the picture content.

- On: The dynamic image performance manager is active in making sure your greatest pleasure from seeing a movie dynamically with the most dark details revealed, vivid and bright image performed all the way.
- Off: The dynamic image performance manager is on standby.

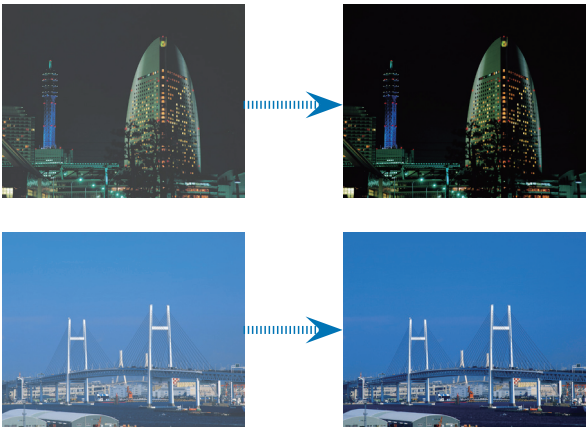

SYSTEM

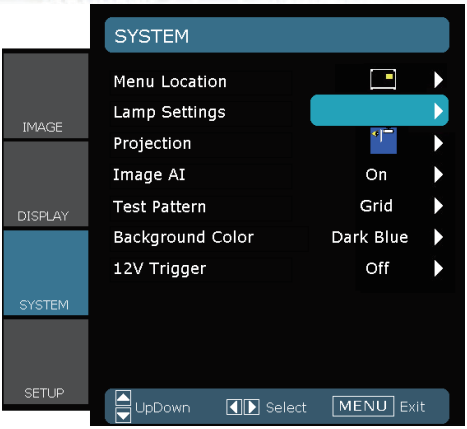

Test Pattern

Display a test pattern. There are Grid, White pattern and None.

Background Color

Use this feature to display a “Dark Blue”, “Black”, or “Gray” screen when no signal is available.

12V Trigger

12V trigger provides a standard trigger for motorized screens.

Note

- “12V OUT” is only for trigger control. Not a power supplier port.
- “12V OUT” is activated when the projector is turned on and continues to stay on till you turn off the projector.

SYSTEM | Lamp Settings

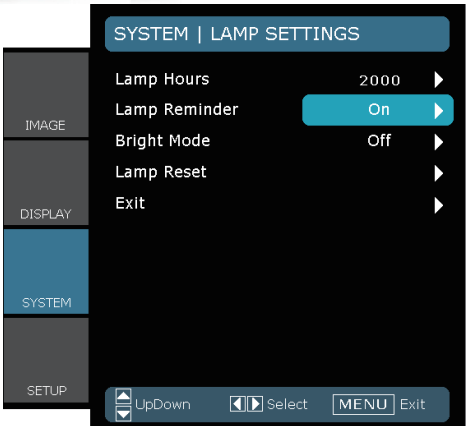

Lamp Hour

Display the cumulative lamp operating time.

Lamp Reminder

Choose this function to show or to hide the warning message when the changing lamp message is displayed. The message will appear up 30 hours before suggested replacement of lamp.

Bright Mode

Choose “On” to increase the brightness. Choose “Off” to return normal mode.

Lamp Reset

Reset the lamp life hour after replacing the lamp.

SETUP

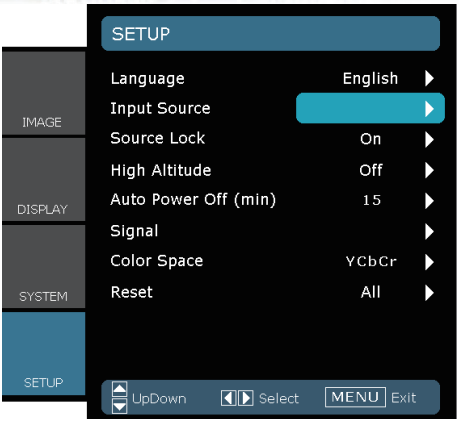

Language

Choose the multilingual OSD menu. Press ◀ or ▶ into the sub menu and then use the ▲ or ▼ key to select your preferred language. Press “Select (Enter)” to finalize the selection.

Input Source

Use this option to enable / disable input sources. Press ↵ to enter the sub menu and select which sources you require. Press “Enter” to finalize the selection. The projector will not search for inputs that are not selected.

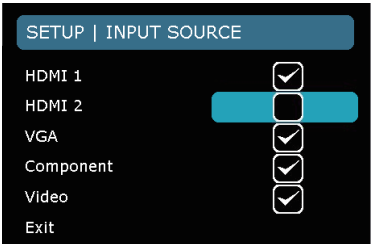

SETUP

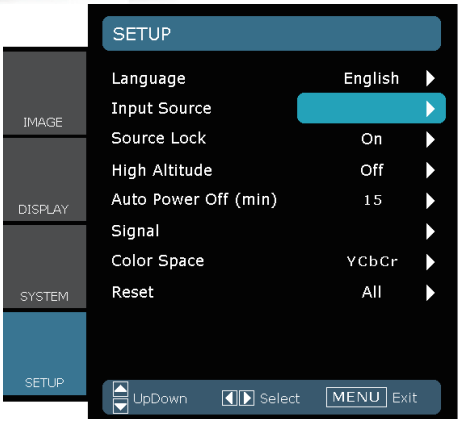

Source Lock

When this function is turned off, the projector will search for other signals if the current input signal is lost. When this function is turned on, it will search for a specified connection port.

High Altitude

Choose “On” to turn on High Altitude mode. Operates the fans at full speed continuously to allow for proper high altitude cooling of the projector.

Auto Power Off (min)

Set the interval of power-off of the system, if there is no signal input.

Color Space

Select an appropriate color matrix type from RGB or YCbCr.

Reset

Return the adjustments and settings to factory default values.

- Current : Return the current menu’s settings to factory default.
- All : Return the settings for all menus to factory default values.

SETUP | Signal

- RGB Source

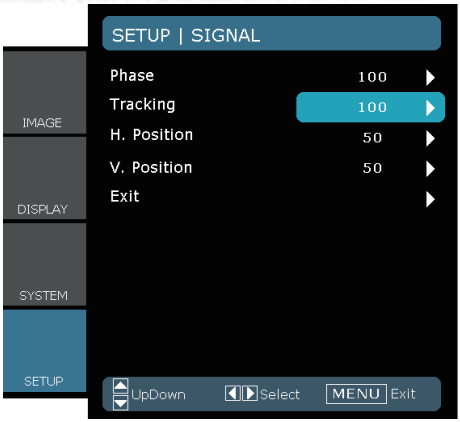

Note

- "Signal" is not supported when the source is HDMI or DVI-D.

Signal

- Phase: Change the display data frequency to match the frequency of your computer's graphic card. When you experience a vertical flickering bar, use this function to make an adjustment.
- Tracking: Synchronize the signal timing of the display with the graphics card. If you experience an unstable or flickering image, use this function to correct it.
- H Position: Adjust the horizontal position.
- V Position: Adjust the vertical position.

SETUP | Signal

- Video Source

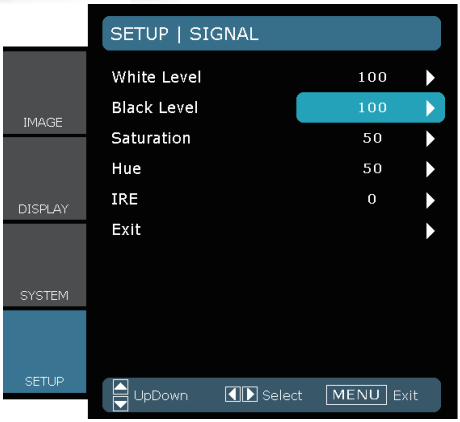

Note

- "Signal" is not supported when the source is HDMI or DVI-D.

Note

- "IRE" is only supported on NTSC signal.

Signal

- White Level: Allow user adjust White Level when inputting S-Video or Video/CVBS signals.
- Black Level: Allow user adjust Black Level when inputting S-Video or Video/CVBS signals.
- Saturation: Adjust a video image from black and white to fully saturated color. Press the ◀ to decrease the amount of color in the image. Press the ▶ to increase the amount of color in the image.
- Hue: Adjust the color balance of red and green. Press the ◀ to increase the amount of green in the image. Press the ▶ to increase the amount of red in the image.
- IRE: Adjust measurement of composite video signals.

Troubleshooting

If you experience a problem with your projector, please refer to the following information. If a problem persists, please contact your local reseller or service center.

Image Problems

? No image appears on-screen

- Ensure all the cables and power connections are correctly and securely connected as described in the “Installation” section.
- Ensure all the pins of connectors are not bent or broken.
- Check if the projection lamp has been securely installed. Please refer to the “Replacing the lamp” section.
- Make sure you have removed the lens cap and the projector is switched on.

? Image is out of focus

- Make sure the lens cap is removed.
- Adjust the Focus Ring on the projector lens.
- Make sure the projection screen is between the required distance 4.89 to 32.68 feet (1.49 to 9.96 meters) from the projector. See page 16.

? The image is stretched when displaying 16:9 DVD title

- When you play anamorphic DVD or 16:9 DVD, the projector will show the best image in 16:9 format on projector side.
- If you play the LBX format DVD title, please change the format as LBX in projector OSD.
- If you play 4:3 format DVD titles, please change the format to 4:3 in the projector OSD.
- If the image is still stretched, you will also need to adjust the aspect ratio by referring to the following:
- Please setup the display format as 16:9 (wide) aspect ratio type on your DVD player.

? Image is too small or too large

- Adjust the Zoom Ring on the top of the projector.
- Move the projector closer to or further from the screen.
- Press “Menu” button on the remote control or projector panel, go to “Display → Format” and try the different settings.

? Image has slanted sides

- If possible, reposition the projector so that it is horizontally centered on the screen and below the bottom of the screen.

? Image is reversed

- Select “SYSTEM → Projection” from the OSD and adjust the projection direction.

Other Problems

? The projector stops responding to all controls

- If possible, turn off the projector, then unplug the power cord and wait at least 60 seconds before reconnecting power.

? Lamp burns out or makes a popping sound

- When the lamp reaches its end of life, it will burn out and may make a loud popping sound. If this happens, the projector will not turn on until the lamp module has been replaced. To replace the lamp, follow the procedures in the “Replacing the Lamp” section on pages 42-43.

Projector Status Indication

LED lighting message

Message	ON/STANDBY LED	Temp-LED	Lamp-LED
	(Green/Amber)	(Red)	(Red)
Standby State (Input power cord)	Amber	○	○
Power on (Warming)	Flashing Green	○	○
Lamp lighting	Green	○	○
Power off (Cooling)	Flashing Green	○	○
Error (Over Temp.)	Flashing Amber	☼	○
Error (Fan fail)	Flashing Amber	Flashing	○
Error (Lamp fail)	Flashing Amber	○	☼

* ON/STANDBY LED be ON when OSD appears, be OFF when OSD disappears.

Note

Steady light ⇨ ☼

No light ⇨ ○

On Screen Messages

- Fan failed:
  The projector will switch off automatically.

- Over temperature:
  The projector will switch off automatically.

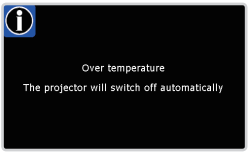

- Replacing the lamp:
  Lamp is approaching the end of it's rated life.
  Replcement suggested.

Remote Control Problems

If the remote control does not work

- Check the operating angle of the remote control is within ±15° both horizontally and vertically of one of the IR receivers on the projector.
- Make sure there are not any obstructions between the remote control and the projector. Move to within 8 m of the projector.
- Make sure the batteries are inserted correctly.
- Replace batteries if they are exhausted.

Replacing the lamp

The projector automatically detects the lamp life. When the lamp life is nearing the end of use, you will receive a warning message.

When you see this message, please contact your local reseller or service center to change the lamp as soon as possible. Make sure the projector has been cooled down for at least 30 minutes before changing the lamp.

CAUTION!

HIGH PRESSURE LAMP MAY EXPLODE IF IMPROPERLY HANDED. REFER TO LAMP REPLACEMENT INSTRUCTIONS.

ATTENTION:

Les lampes à haute pression peuvent exploser si elles sont mal utilisées.

Confier l'entretien à une personne qualifiée.

Warning: If ceiling mounted, please use caution when opening the lamp access panel. It is recommended to wear safety glasses if changing the bulb when ceiling mounted. “Caution must be used to prevent any loose parts from falling out of projector.”

Warning: Lamp compartment may be hot! Allow it to cool down before changing the lamp!

Warning: To reduce the risk of personal injury, do not drop the lamp module or touch the lamp bulb. The bulb may shatter and cause injury if it is dropped.

Note

- The screws on the lamp cover and the lamp cannot be removed.
- The projector cannot be turned on if the lamp cover has not been placed back on the projector.
- Do not touch the glass area of the lamp. Hand oil can cause the lamp to shatter. Use a dry cloth to clean the lamp module if it was accidentally touched.

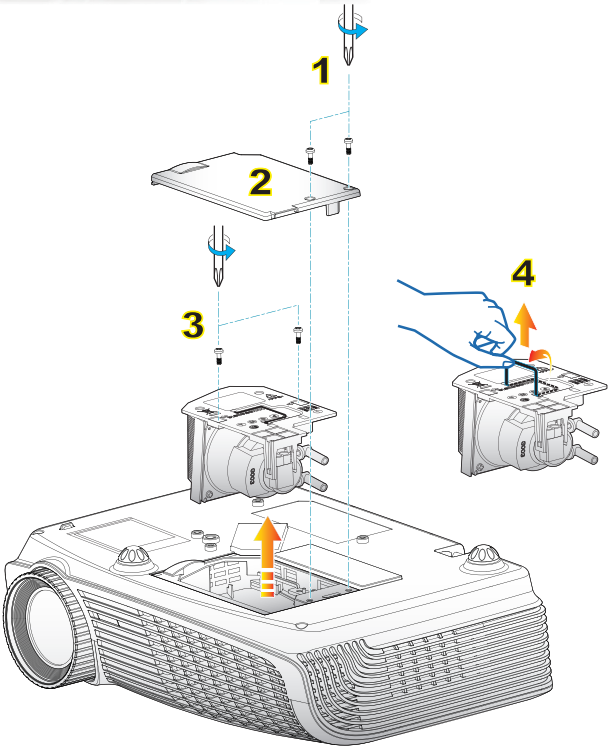

Lamp Replacement Procedure:

1. Switch off the power to the projector by pressing the "⏻" button.
2. Allow the projector to cool down for at least 30 minutes.
3. Disconnect the power cord.
4. Unscrew the two screws on the cover. 1
5. Lift up and remove the cover. 2
6. Unscrew the two screws on the lamp module. 3
7. Lift up the lamp handle and remove the lamp module slowly and carefully. 4

To replace the lamp module, reverse the previous steps.

8. Turn on the projector and use "Lamp Reset" after the lamp module is replaced.

Lamp Reset: (i) Press "Menu" → (ii) Select "SYSTEM" → (iii) Select "Lamp Settings" → (iv) Select "Lamp Reset" → (v) Select "Yes".

Compatibility Modes

Computer Compatibility

Mode	Resolution	V.Frequency (Hz)	Analog	Digital
SVGA	800 x 600	56	✓	×
	800 x 600	60	✓	✓
	800 x 600	72	✓	✓
	800 x 600	75	✓	✓
	800 x 600	85	✓	✓
XGA	1024 x 768	60	✓	✓
	1024 x 768	70	✓	✓
	1024 x 768	75	✓	✓
	1024 x 768	85	✓	×
WXGA	1280 x 768	60	✓	✓
	1280 x 800	60	✓	×
HD	1280 x 720	60	✓	✓
	1280 x 1024	60	✓	✓
	1280 x 1024	75	✓	✓
	1920 x 1080	24	×	✓
	1920 x 1080	60	×	✓
SXGA+	1400 x 1050	60	✓	✓
UXGA	1600 x 1200	60	✓	✓
Power Book G4				
SVGA	800 x 600	60	✓	×
	800 x 600	75	✓	×
	800 x 600	85	✓	×
XGA	1024 x 768	60	✓	×
	1024 x 768	70	✓	×
	1024 x 768	75	✓	×
	1024 x 768	85	✓	×
WXGA	1280 x 768	60	✓	×
HD	1280 x 720	60	✓	×
	1280 x 1024	60	✓	×
	1280 x 1024	75	✓	×
SXGA+	1400 x 1050	60	✓	×
UXGA	1600 x 1200	60	✓	×
iMAC				
XGA	1024 x 768	60	✓	×

Note

- For widescreen resolution (WXGA), the compatibility support is dependent on Notebook/PC models.

Video Compatibility

NTSC	M (3.58MHz), 4.43 MHz
PAL	B, D, G, H, I, M, N
SECAM	B, D, G, K, K1, L
SDTV/HDTV	480i/p, 576i/p, 720p@50Hz/60Hz, 1080i/p@50Hz/60Hz

Ceiling Mount Installation

1. To prevent damage to your projector, please use the Optoma ceiling mount.
2. If you wish to use a third party ceiling mount kit, please ensure the screws used to attach a mount to the projector meet the following specifications:
   - Screw type: M3*3
   - Maximum screw length: 10mm
   - Minimum screw length: 7.5mm

Note

- Please note that damage resulting from incorrect installation will invalidate the warranty.

Note

Warning:

1. If you buy a ceiling mount from another company, please be sure to use the correct screw size. Screw size will vary depending on the thickness of the mounting plate.
2. Be sure to keep at least 10 cm gap between the ceiling and the bottom of the projector.
3. Avoid installing the projector near a heat source.

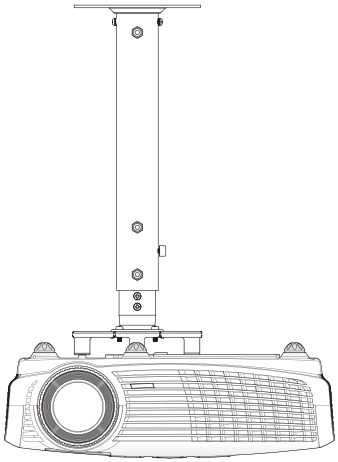

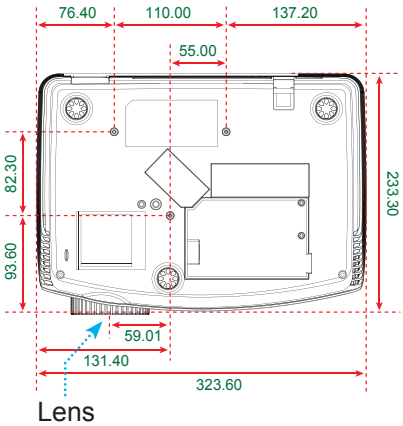

Unit: mm

Optoma Global Offices

For service or support please contact your local office.

USA

715 Sycamore Drive
Milpitas, CA 95035, USA
www.optomausa.com

Tel : 408-383-3700
Fax: 408-383-3702
Service : services@optoma.com

Canada

5630 Kennedy Road, Mississauga,
ON, L4Z 2A9, Canada
www.optoma.ca

Tel : 905-361-2582
Fax: 905-361-2581
Service : canadacsragent@optoma.com

Europe

42 Caxton Way, The Watford Business Park
Watford, Hertfordshire,
WD18 8QZ, UK
www.optoma.eu
Service Tel : +44 (0)1923 691865

Tel : +44 (0) 1923 691 800
Fax: +44 (0) 1923 691 888
Service : service@tsc-europe.com

France

Bâtiment E
81-83 avenue Edouard Vaillant
92100 Boulogne Billancourt, France

Tel : +33 1 41 46 12 20
Fax: +33 1 41 46 94 35
Service : savoptoma@optoma.fr

Spain

C/ José Hierro,36 Of. 1C
28529 Rivas VaciaMadrid,
Spain

Tel : +34 91 499 06 06
Fax: +34 91 670 08 32

Deutschland

Werftstrasse 25
D40549 Düsseldorf,
Germany

Tel : +49 (0) 211 506 6670
Fax: +49 (0) 211 506 66799
Service : info@optoma.de

Scandinavia

Grev Wedels Plass 2
3015 Drammen
Norway

Tel : +47 32 26 89 90
Fax: +47 32 83 78 98
Service : info@optoma.no

Latin America

715 Sycamore Drive
Milpitas, CA 95035, USA
www.optoma.com.br

Tel : 408-383-3700
Fax: 408-383-3702
www.optoma.com.mx

Korea

WOOMI TECH.CO.,LTD.
4F,Minu Bldg.33-14, Kangnam-Ku,
seoul,135-815, KOREA

Tel : +82+2+34430004
Fax: +82+2+34430005

Japan

東京都足立区綾瀬3-25-18
株式会社オーエスエム
サポートセンター:0120-46-5040

E-mail : info@osscreen.com
www.os-worldwide.com

Taiwan

5F., No. 108, Minchiuan Rd.
Shindian City,
Taipei Taiwan 231, R.O.C.
www.optoma.com.tw

Tel : +886-2-2218-2360
Fax: +886-2-2218-2313
Service : services@optoma.com.tw
asia.optoma.com

Hong Kong

Unit A, 27/F Dragon Centre,
79 Wing Hong Street,
Cheung Sha Wan,
Kowloon, Hong Kong

Tel : +852-2396-8968
Fax: +852-2370-1222
www.optoma.com.hk

China

5F, No. 1205, Kaixuan Rd.,
Changning District
Shanghai, 200052, China

Tel : +86-21-62947376
Fax: +86-21-62947375
www.optoma.com.cn

Regulation & Safety notices

This appendix lists the general notices of your projector.

FCC notice

This device has been tested and found to comply with the limits for a Class B digital device pursuant to Part 15 of the FCC rules. These limits are designed to provide reasonable protection against harmful interference in a residential installation. This device generates, uses and can radiate radio frequency energy and, if not installed and used in accordance with the instructions, may cause harmful interference to radio communications.

However, there is no guarantee that interference will not occur in a particular installation. If this device does cause harmful interference to radio or television reception, which can be determined by turning the device off and on, the user is encouraged to try to correct the interference by one or more of the following measures:

- Reorient or relocate the receiving antenna.
- Increase the separation between the device and receiver.
- Connect the device into an outlet on a circuit different from that to which the receiver is connected.
- Consult the dealer or an experienced radio/television technician for help.

Notice: Shielded cables

All connections to other computing devices must be made using shielded cables to maintain compliance with FCC regulations.

Caution

Changes or modifications not expressly approved by the manufacturer could void the user's authority, which is granted by the Federal Communications Commission, to operate this projector.

Operation conditions

This device complies with Part 15 of the FCC Rules. Operation is subject to the following two conditions:

1. This device may not cause harmful interference and
2. This device must accept any interference received, including interference that may cause undesired operation.

Notice: Canadian users

This Class B digital apparatus complies with Canadian ICES-003.

Remarque à l'intention des utilisateurs canadiens

Cet appareil numerique de la classe B est conforme a la norme NMB-003 du Canada.

Declaration of Conformity for EU countries

- EMC Directive 2004/108/EC (including amendments)
- Low Voltage Directive 2006/95/EC
- R & TTE Directive 1999/5/EC (if product has RF function)

Disposal instructions

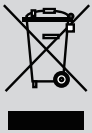

Do not throw this electronic device into the trash when discarding. To minimize pollution and ensure utmost protection of the global environment, please recycle it.