Panasonic

Operating Instructions
Functional Manual

DLP™ Projector **Commercial Use**

Model No. PT-DZ21K2
PT-DS20K2
PT-DW17K2
PT-DZ16K2

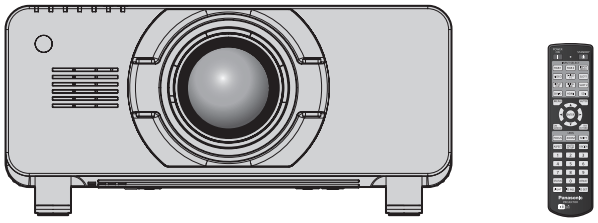

The projection lens is sold separately.

Thank you for purchasing this Panasonic product.

- This manual is common to all the models regardless of suffixes of the Model No.
  - for India
    PT-DZ21K2D / PT-DS20K2D / PT-DW17K2D / PT-DZ16K2D
  - for other countries or regions
    PT-DZ21K2 / PT-DS20K2 / PT-DW17K2 / PT-DZ16K2
- Before operating this product, please read the instructions carefully and save this manual for future use.
- Before using this product, be sure to read “Read this first!” (➡ pages 5 to 14).

EU

reaL D 3D

ENGLISH

TQBJ0889-1

Contents

Read this first! 5

Chapter 1 Preparation

Precautions for use **18**
- Cautions when transporting 18
- Cautions when installing 18
- Security 21
- DIGITAL LINK 21
- Art-Net 21
- Early Warning Software 21
- Disposal 21
- Cautions on use 22
- Accessories 23
- Optional accessories 24

About your projector **25**
- Remote control 25
- Projector body 27

Preparing the remote control **30**
- Inserting and removing the batteries 30
- When using the multiple projectors 30
- Connecting the remote control to the projector with a cable 31

Chapter 2 Getting Started

Setting up **33**
- Installation mode 33
- Parts for ceiling mount (optional) 34
- Projected image and throw distance 34
- Adjusting adjustable feet 49

Attaching/removing the projection lens (optional) **50**
- Attaching the projection lens 50
- Removing the projection lens 51

Connecting **52**
- Before connecting 52
- Connecting example: AV equipment 53
- Connecting example: Computers 54
- Connecting example using DIGITAL LINK 55

Chapter 3 Basic Operations

Switching on/off the projector **58**
- Connecting the power cord 58
- Power indicator 58
- Switching on the projector 59
- When the initial setting screen is displayed 60
- Making adjustments and selections 63
- Switching off the projector 64

Projecting **65**
- Selecting the input signal 65
- Adjusting the focus, zoom, and shift 65
- Adjusting the lens position and focus when the fixed-focus lens (Model No.: ET-D75LE90) is used 66
- Setting the lens position 67
- Adjustment range by the lens position shift (optical shift) 67
- Adjusting the lens mounter when the focus is unbalanced 69

Operating with the remote control **71**
- Switching the input 71
- Using the shutter function 72
- Using the on-screen display function 73
- Using the automatic setup function 73
- Switching the image aspect ratio 73
- Using the function button 74
- Displaying internal test pattern 74
- Using the status function 74
- Using the AC voltage monitor function 75
- Setting ID number of the remote control 75

Chapter 4 Settings

Menu navigation **77**
- Navigating through the menu 77
- Main menu 78
- Sub-menu 79

[PICTURE] menu **83**
- [PICTURE MODE] 83
- [CONTRAST] 83
- [BRIGHTNESS] 84
- [COLOR] 84
- [TINT] 84
- [COLOR TEMPERATURE] 84
- [GAMMA] 86
- [SYSTEM DAYLIGHT VIEW] 87
- [SHARPNESS] 87
- [NOISE REDUCTION] 88
- [DYNAMIC IRIS] 88
- [SYSTEM SELECTOR] 89
- sRGB-compliant video 90

[POSITION] menu **91**
- [SHIFT] 91
- [ASPECT] 91
- [ZOOM] 92
- [CLOCK PHASE] 93
- [GEOMETRY] 93

[ADVANCED MENU] menu **96**
[DIGITAL CINEMA REALITY] 96
[BLANKING] 96
[INPUT RESOLUTION] 97
[CLAMP POSITION] 97
[EDGE BLENDING] 98
[FRAME RESPONSE] 99
[FRAME CREATION] 100
[FRAME LOCK] 100
[RASTER POSITION] 101
[DISPLAY LANGUAGE] menu **102**
Changing the display language 102
[3D SETTINGS] menu **103**
[3D SYSTEM SETTING] 103
[3D SYNC SETTING] 103
[3D INPUT FORMAT] 104
[LEFT/RIGHT SWAP] 104
[3D COLOR MATCHING] 104
[3D PICTURE BALANCE] 105
[DARK TIME SETTING] 105
[3D FRAME DELAY] 106
[3D TEST MODE] 106
[3D TEST PATTERN] 106
[SAFETY PRECAUTIONS MESSAGE] 107
[3D SAFETY PRECAUTIONS] 107
[DISPLAY OPTION] menu **108**
[COLOR MATCHING] 108
[LARGE SCREEN CORRECTION] 109
[SCREEN SETTING] 109
[AUTO SIGNAL] 110
[AUTO SETUP] 110
[BACKUP INPUT SETTING] 111
[SIMUL INPUT SETTING] 112
[RGB IN] 113
[DVI-D IN] 114
[HDMI IN] 115
[DIGITAL LINK IN] 117
[SDI IN] 118
[ON-SCREEN DISPLAY] 119
[IMAGE ROTATION] 121
[BACK COLOR] 121
[STARTUP LOGO] 121
[UNIFORMITY] 122
[SHUTTER SETTING] 122
[FREEZE] 123
[WAVEFORM MONITOR] 123
[CUT OFF] 125
[PROJECTOR SETUP] menu **126**
[PROJECTOR ID] 126
[PROJECTION METHOD] 126
[LAMP SELECT] 126
[LAMP RELAY] 127
[BRIGHTNESS CONTROL] 128
[STANDBY MODE] 133
[SCHEDULE] 133
[INITIAL STARTUP] 135
[STARTUP INPUT SELECT] 135
[RS-232C] 135
[STATUS] 137
[AC VOLTAGE MONITOR] 138
[NO SIGNAL SHUT-OFF] 138
[REMOTE2 MODE] 139
[FUNCTION BUTTON] 139
[DATE AND TIME] 139
[LENS CALIBRATION] 140
[LENS MEMORY] 141
[SAVE ALL USER DATA] 142
[LOAD ALL USER DATA] 143
[INITIALIZE] 143
[SERVICE PASSWORD] 143
[P IN P] menu **144**
Using P IN P function 144
[TEST PATTERN] menu **146**
[TEST PATTERN] 146
[SIGNAL LIST] menu **147**
Registering new signals 147
Renaming the registered signal 147
Deleting the registered signal 147
Protecting the registered signal 148
Expanding signal lock-in range 148
Sub memory 149
[SECURITY] menu **150**
[SECURITY PASSWORD] 150
[SECURITY PASSWORD CHANGE] 150
[DISPLAY SETTING] 150
[TEXT CHANGE] 151
[CONTROL DEVICE SETUP] 151
[CONTROL DEVICE PASSWORD CHANGE] 152

[NETWORK] menu **154**
[DIGITAL LINK MODE] 154
[DIGITAL LINK SETUP] 154
[DIGITAL LINK STATUS] 155
[NETWORK SETUP] 155
[NETWORK CONTROL] 156
[NETWORK STATUS] 156
[DIGITAL LINK MENU] 157
[Art-Net SETUP] 157
[Art-Net CHANNEL SETTING] 157
[Art-Net STATUS] 158
Network connection 158
Connecting to a twisted-pair-cable transmitter 159
Accessing from the web browser 160

Chapter 5 Maintenance

Lamp/temperature/filter indicators **179**
When an indicator lights up 179
Maintenance/replacement **181**
Before performing maintenance/replacement 181
Maintenance 181
Replacing the unit 183
Troubleshooting **188**
Self-diagnosis display **190**

Chapter 6 Appendix

Technical information **194**
PJLink protocol 194
Using Art-Net function 195
Control commands via LAN 198
<SERIAL IN>/<SERIAL OUT> terminal 201
<REMOTE 2 IN> terminal 206
Two-window display combination list 207
Control device password 208
Upgrade Kit 208
List of compatible signals 209
Specifications **215**
Dimensions **219**
Precautions for attaching the ceiling mount bracket **220**
Index **221**

Read this first!

WARNING: THIS APPARATUS MUST BE EARTHED.

WARNING: To prevent damage which may result in fire or shock hazard, do not expose this appliance to rain or moisture.
This device is not intended for use in the direct field of view at visual display workplaces. To avoid incommoding reflexions at visual display workplaces this device must not be placed in the direct field of view.
The equipment is not intended for used at a video workstation in compliance BildscharbV.

The sound pressure level at the operator position is equal or less than 70 dB (A) according to ISO 7779.

WARNING:
1. Remove the plug from the mains socket when this unit is not in use for a prolonged period of time.
2. To prevent electric shock, do not remove cover. No user serviceable parts inside. Refer servicing to qualified service personnel.
3. Do not remove the earthing pin on the mains plug. This apparatus is equipped with a three prong earthing-type mains plug. This plug will only fit an earthing-type mains socket. This is a safety feature. If you are unable to insert the plug into the mains socket, contact an electrician. Do not defeat the purpose of the earthing plug.

WARNING:
This equipment is compliant with Class A of CISPR32.
In a residential environment this equipment may cause radio interference.

CAUTION: To assure continued compliance, follow the attached installation instructions. This includes using the provided power cord and shielded interface cables when connecting to computer or peripheral devices. Also, any unauthorized changes or modifications to this equipment could void the user's authority to operate this device.

This is a device to project images onto a screen, etc., and is not intended for use as indoor lighting in a domestic environment.

Directive 2009/125/EC

WARNING: TO REDUCE THE RISK OF FIRE OR ELECTRIC SHOCK, DO NOT EXPOSE THIS PRODUCT TO RAIN OR MOISTURE.

WARNING: RISK OF ELECTRIC SHOCK. DON'T OPEN

Indicated on the projector

The lightning flash with arrowhead symbol, within an equilateral triangle, is intended to alert the user to the presence of uninsulated "dangerous voltage" within the product's enclosure that may be of sufficient magnitude to constitute a risk of electric shock to persons.

The exclamation point within an equilateral triangle is intended to alert the user to the presence of important operating and maintenance (servicing) instructions in the literature accompanying the product.

WARNING: TURN THE POWER OFF AND DISCONNECT THE POWER PLUG FROM THE WALL OUTLET BEFORE REPLACING THE LAMP UNIT.

CAUTION (North/Middle/South America/Taiwan)

This equipment is equipped with a three-pin grounding-type power plug. Do not remove the grounding pin on the power plug. This plug will only fit a grounding-type power outlet. This is a safety feature. If you are unable to insert the plug into the outlet, contact an electrician. Do not defeat the purpose of the grounding plug.

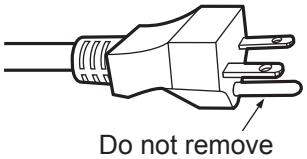

WARNING (USA and Canada)

- Not for use in a computer room as defined in the Standard for the Protection of Electronic Computer/Data Processing Equipment, ANSI/NFPA 75.
- For permanently connected equipment, a readily accessible disconnect device shall be incorporated in the building installation wiring.
- For pluggable equipment, the socket-outlet shall be installed near the equipment and shall be easily accessible.

For USA-California Only

This product contains a CR Coin Cell Lithium Battery which contains Perchlorate Material – special handling may apply.
See www.dtsc.ca.gov/hazardouswaste/perchlorate

NOTICE USA only:

- This product has a High Intensity Discharge (HID) lamp that contains mercury. Disposal may be regulated in your community due to environmental considerations. For disposal or recycling information, please visit Panasonic website: http://www.panasonic.com/environmental or call 1-888-769-0149.

NOTIFICATION (Canada)

This class A digital apparatus complies with Canadian ICES-003.

Contains mercury / Contenu avec mercure

For more information on safe handling procedures, the measures to be taken in case of accidental breakage and safe disposal options visit: ec.gc.ca/mercure-mercury/.
Dispose of or recycle in accordance with applicable laws.

Pour plus de renseignements sur les procédures de manutention sécuritaire, les mesures à prendre en cas de bris accidentel et les options d'élimination sécuritaire visitez : ec.gc.ca/mercure-mercury/.
Mettez au rebut ou recyclez conformément aux lois applicables.

FCC NOTICE (USA)

Verification

Model Number:	PT-DZ21K2 / PT-DS20K2 / PT-DW17K2 / PT-DZ16K2
Trade Name:	Panasonic
Responsible Party:	Panasonic Corporation of North America
Address:	Two Riverfront Plaza, Newark, NJ 07102-5490
General Contact:	http://www.panasonic.com/support
Projector Contact:	http://panasonic.net/avc/projector/

This device complies with Part 15 of the FCC Rules.
Operation is subject to the following two conditions:
(1) This device may not cause harmful interference, and (2) this device must accept any interference received, including interference that may cause undesired operation.

Caution:
This equipment has been tested and found to comply with the limits for a Class A digital device, pursuant to part 15 of the FCC Rules. These limits are designed to provide reasonable protection against harmful interference when the equipment is operated in a commercial environment. This equipment generates, uses, and can radiate radio frequency energy and, if not installed and used in accordance with the instruction manual, may cause harmful interference to radio communications. Operation of this equipment in a residential area is likely to cause harmful interference in which case the user will be required to correct the interference at his own expense.

FCC Warning:
To assure continued compliance, follow the attached installation instructions. This includes using the provided power cord and shielded interface cables when connecting to computer or peripheral devices. Also, any unauthorized changes or modifications to this equipment could void the user’s authority to operate this device.

IMPORTANT: THE MOLDED PLUG (U.K. only)

FOR YOUR SAFETY, PLEASE READ THE FOLLOWING TEXT CAREFULLY.

This appliance is supplied with a molded three pin mains plug for your safety and convenience. A 13 amp fuse is fitted in this plug. Should the fuse need to be replaced, please ensure that the replacement fuse has a rating of 13 amps and that it is approved by ASTA or BSI to BS1362.

Check for the ASTA mark or the BSI mark on the body of the fuse.

If the plug contains a removable fuse cover, you must ensure that it is refitted when the fuse is replaced. If you lose the fuse cover, the plug must not be used until a replacement cover is obtained. A replacement fuse cover can be purchased from an Authorized Service Center.

If the fitted molded plug is unsuitable for the mains socket in your home, then the fuse should be removed and the plug cut off and disposed of safely. There is a danger of severe electrical shock if the cut off plug is inserted into any 13 amp socket.

If a new plug is to be fitted, please observe the wiring code as shown below.
If in any doubt, please consult a qualified electrician.

WARNING: THIS APPLIANCE MUST BE EARTHED.

IMPORTANT: The wires in this mains lead are colored in accordance with the following code:

Green - and - Yellow: Earth
Blue: Neutral
Brown: Live

As the colors of the wire in the mains lead of this appliance may not correspond with the colored markings identifying the terminals in your plug, proceed as follows.

The wire which is colored GREEN - AND - YELLOW must be connected to the terminal in the plug which is marked with the letter E or by the Earth symbol ⏚ or colored GREEN or GREEN - AND - YELLOW.

The wire which is colored BLUE must be connected to the terminal in the plug which is marked with the letter N or colored BLACK.

The wire which is colored BROWN must be connected to the terminal in the plug which is marked with the letter L or colored RED.

How to replace the fuse: Open the fuse compartment with a screwdriver and replace the fuse.

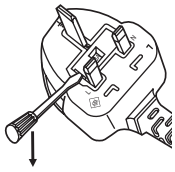

Importer's name and address within the European Union

Panasonic Marketing Europe GmbH

Panasonic Testing Centre

Winsbergring 15, 22525 Hamburg, Germany

WARNING:

■ POWER

The wall outlet or the circuit breaker shall be installed near the equipment and shall be easily accessible when problems occur. If the following problems occur, cut off the power supply immediately.
Continued use of the projector in these conditions will result in fire or electric shock.
- If foreign objects or water get inside the projector, cut off the power supply.
- If the projector is dropped or the cabinet is broken, cut off the power supply.
- If you notice smoke, strange smells or noise coming from the projector, cut off the power supply.

Please contact an Authorized Service Center for repairs, and do not attempt to repair the projector yourself.

During a thunderstorm, do not touch the projector or the cable.
Electric shocks can result.

Do not do anything that might damage the power cord or the power plug.
If the power cord is used while damaged, electric shocks, short-circuits or fire will result.
- Do not damage the power cord, make any modifications to it, place it near any hot objects, bend it excessively, twist it, pull it, place heavy objects on top of it or wrap it into a bundle.

Ask an Authorized Service Center to carry out any repairs to the power cord that might be necessary.

Do not use anything other than the provided power cord.
Failure to observe this will result in electric shocks or fire. Please note that if you do not use the provided power cord to ground the device on the side of the outlet, this may result in electric shocks.

Completely insert the power plug into the wall outlet and the power connector into the projector terminal.
If the plug is not inserted correctly, electric shocks or overheating will result.
- Do not use plugs which are damaged or wall outlets which are coming loose from the wall.

Do not handle the power plug and power connector with wet hands.
Failure to observe this will result in electric shocks.

Do not overload the wall outlet.
If the power supply is overloaded (ex., by using too many adapters), overheating may occur and fire will result.

Clean the power plug regularly to prevent it from becoming covered in dust.
Failure to observe this will cause a fire.
- If dust builds up on the power plug, the resulting humidity can damage the insulation.
- If not using the projector for an extended period of time, pull the power plug out from the wall outlet.

Pull the power plug out from the wall outlet and wipe it with a dry cloth regularly.

WARNING:

■ ON USE/INSTALLATION

Do not place the projector on soft materials such as carpets or sponge mats.
Doing so will cause the projector to overheat, which can cause burns, fire or damage to the projector.

Do not set up the projector in humid or dusty places or in places where the projector may come into contact with oily smoke or steam.
Using the projector under such conditions will result in fire, electric shocks or deterioration of components. Deterioration of components (such as ceiling mount brackets) may cause the projector which is mounted on the ceiling to fall down.

Do not install this projector in a place which is not strong enough to take the full weight of the projector or on top of a surface which is sloped or unstable.
Failure to observe this will cause projector to fall down or tip over the projector, and severe injury or damage could result.

Do not cover the air intake/exhaust ports or place anything within 500 mm (19-11/16") of them.
Doing so will cause the projector to overheat, which can cause fire or damage to the projector.
- Do not place the projector in narrow, badly ventilated places.
- Do not place the projector on cloth or papers, as these materials could be drawn into the air intake port.

Do not place your hands or other objects close to the air exhaust port.
Doing so will cause burns or damage your hands or other objects.
- Heated air comes out of the air exhaust port. Do not place your hands or face, or objects which cannot withstand heat close to this port.

Do not look at or place your skin into the light emitted from the lens while the projector is being used.
Doing so can cause burns or loss of sight.
- Strong light is emitted from the projector’s lens. Do not look at or place your hands directly into this light.
- Be especially careful not to let young children look into the lens. In addition, turn off the power and switch off the main power when you are away from the projector.

Do not project an image with the lens cover of the projection lens (optional) attached.
Doing so can cause fire.

Never attempt to remodel or disassemble the projector.
High voltages can cause fire or electric shocks.
- For any inspection, adjustment and repair work, please contact an Authorized Service Center.

Do not allow metal objects, flammable objects, or liquids to enter inside of the projector. Do not allow the projector to get wet.
Doing so may cause short circuits or overheating, and result in fire, electric shock, or malfunction of the projector.
- Do not place containers of liquid or metal objects near the projector.
- If liquid enters inside of the projector, consult your dealer.
- Particular attention must be paid to children.

Use the ceiling mount bracket specified by Panasonic.
Using the ceiling mount bracket other than the specified one will result in falling accidents.
- Attach the supplied safety cable to the ceiling mount bracket to prevent the projector from falling down.

Installation work (such as ceiling mount bracket) should only be carried out by a qualified technician.
If installation is not carried out and secured correctly, it can cause injury or accidents, such as electric shocks.
- Be sure to use the wire provided with the ceiling mount bracket as an extra safety measure to prevent the projector from falling down. (Install in a different location to the ceiling mount bracket.)

WARNING:

■ ACCESSORIES

Do not use or handle the batteries improperly, and refer to the following.
Failure to observe this will cause burns, batteries to leak, overheat, explode or catch fire.
- Do not use unspecified batteries.
- Do not charge dry cell batteries.
- Do not disassemble dry cell batteries.
- Do not heat the batteries or place them into water or fire.
- Do not allow the + and – terminals of the batteries to come into contact with metallic objects such as necklaces or hairpins.
- Do not store or carry batteries together with metallic objects.
- Store the batteries in a plastic bag and keep them away from metallic objects.
- Make sure the polarities (+ and –) are correct when inserting the batteries.
- Do not use a new battery together with an old battery or mix different types of batteries.
- Do not use batteries with the outer cover peeling away or removed.

If the battery fluid leaks, do not touch it with bare hands, and take the following measures if necessary.
- Battery fluid on your skin or clothing could result in skin inflammation or injury.
  Rinse with clean water and seek medical advice immediately.
- Battery fluid coming in contact with your eyes could result in loss of sight.
  In this case, do not rub your eyes. Rinse with clean water and seek medical advice immediately.

Do not remove unspecified screws during the lamp unit replacement.
Doing so can cause electric shocks, burns, or injury.

Do not disassemble the lamp unit.
If the lamp breaks, it could cause injury.

Lamp replacement
The lamp has high internal pressure. If improperly handled, an explosion and severe injury or accidents will result.
- The lamp can easily explode if struck against hard objects or dropped.
- Before replacing the lamp unit, be sure to turn the power off and to disconnect the power plug from the wall outlet.
  Electric shocks or explosions can result if this is not done.
- When replacing the lamp unit, turn the power off and allow the lamp to cool for at least one hour before handling it otherwise it can cause burns.
- Be careful to hold the lamp unit cover and to loosen the lamp unit cover fixing screws with the projector installed upward in the vertical direction since the lamp unit cover may open and drop off on its weight.
  This can cause severe injury or accidents.
- When you loosen or fix the lamp case fixing screws with the projector installed upward in the vertical direction, make sure to hold the lamp case handle since the lamp case may drop off on its weight.
  This can cause severe injury or accidents.

Do not allow children to reach the lens fixing screw.
Accidentally swallowing them can cause physical harm.
- If swallowed, seek medical advice immediately.

Remove the depleted batteries from the remote control promptly.
- Leaving them in the unit may result in fluid leakage, overheating, or explosion of the batteries.

CAUTION:

■ POWER

When disconnecting the power cord, be sure to hold the power plug and power connector.
If the power cord itself is pulled, the lead will become damaged, and fire, short-circuits or serious electric shocks will result.

When not using the projector for an extended period of time, disconnect the power plug from the wall outlet.
Failure to do so may result in fire or electric shock.

Before replacing the projection lens, be sure to turn off the power and disconnect the power plug from the wall outlet.
- Unexpected projection of light may cause injury to eyes.
- Replacing the projection lens without removing the power plug may result in electric shock.

Disconnect the power plug from the wall outlet before carrying out any cleaning and replacing the unit.
Failure to do so may result in electric shock.

■ ON USE/INSTALLATION

Do not place heavy objects on top of the projector.
Failure to observe this will cause the projector to become unbalanced and fall, which could result in damage or injury. The projector will be damaged or deformed.

Do not put your weight on this projector.
You could fall or the projector could break, and injury will result.
- Be especially careful not to let young children stand or sit on the projector.

Do not place the projector in extremely hot locations.
Doing so will cause the outer casing or internal components to deteriorate, or result in fire.
- Take particular care in locations exposed to direct sunlight or near heaters.

Do not install the projector in a location where salt pollution or corrosive gas may occur.
Doing so may result in falling due to corrosion.

Do not place your hands in the openings beside the optical lens, while shifting the lens.
Failure to observe this could cause injury.

Do not stand in front of the lens while the projector is being used.
Doing so can cause damage and burns to clothing.
- Strong light is emitted from the projector’s lens.

Do not place objects in front of the lens while the projector is being used.
Doing so can cause fire, damage to an object, or malfunction of the projector.
- Strong light is emitted from the projector’s lens.

The projector must be carried or installed by two or more people.
Failure to do so may cause falling accidents.

Always disconnect all cables before moving the projector.
Moving the projector with cables still attached can damage the cables, which will cause fire or electric shocks to occur.

When mounting the projector on the ceiling, keep mounting screws and power cord from contact with metal parts inside the ceiling.
Contact with metal parts inside the ceiling can cause electric shocks.

■ ACCESSORIES

Do not use the old lamp unit.
If used it could cause lamp explosion.

If the lamp has broken, ventilate the room immediately. Do not touch or bring your face close to the broken pieces.
Failure to observe this will cause the user to absorb the gas which was released when the lamp broke and which contains nearly the same amount of mercury as fluorescent lamps, and the broken pieces will cause injury.
- If you believe that you have absorbed the gas or that the gas has got into your eyes or mouth, seek medical advice immediately.
- Ask your dealer about replacing the lamp unit and check the inside of the projector.

CAUTION:

When not using the projector for an extended period of time, remove the batteries from the remote control.
Failure to observe this will cause the batteries to leak, overheat, catch fire or explode, which may result in fire or contamination of surrounding area.

■ MAINTENANCE

Do not attach the air filter unit while it is wet.
Doing so may result in electric shock or malfunctions.
- After you clean the air filter units, dry them thoroughly before reattaching them.

Do not touch the fan with your fingers or any other parts of your body when replacing the lamp unit.
Doing so can cause injury.

Ask your dealer about cleaning inside the projector once a year.
Continuous use while dust is accumulated inside the projector may result in fire.
- For cleaning fee, ask your dealer.

■ VIEWING 3D VIDEO (PT-DZ21K2 and PT-DS20K2 only)

Those with a medical history of oversensitivity to light, heart problems, or poor physical health should not view 3D images.
This may lead to a worsening of medical conditions.

If you feel tiredness or discomfort, or other abnormality while viewing with 3D Eyewear, discontinue viewing.
Continuing use may cause health problems. Take a break as necessary.

When viewing 3D movies, aim to view one movie at a time and take a break as necessary.

When viewing 3D images, for example when playing 3D games or using a PC where two way interaction is possible, take an appropriate break every 30 to 60 minutes.
Watching for long periods of time may cause eye fatigue.

When preparing contents, use contents properly created to be used for 3D.
This may cause eye fatigue or health problems.

When viewing 3D images, pay attention to people and objects in the vicinity.
3D video may be mistaken for actual objects, and the related bodily movements can cause damage to objects and lead to injury.

Use 3D Eyewear when viewing 3D videos.

Do not tilt your head when viewing with 3D Eyewear.

Those who are near or far sighted, those with weaker eyesight in one eye, or those with astigmatism should use corrective glasses etc. when using 3D Eyewear.

If the image appears distinctly double when viewing 3D video, discontinue viewing.
Watching for long periods of time may cause eye fatigue.

View at a distance of at least three times the effective height of the screen.
Viewing at distance closer than the recommended distance may cause eye fatigue. As with movies, if there are black bands at the top and bottom of the video, view at a distance of 3 times or more of the height of the video section.

Children younger than 5 or 6 years old should not use 3D Eyewear.
As it is difficult to gauge the reactions of children to fatigue and discomfort their condition may worsen suddenly. If a child uses the 3D Eyewear, guardians should beware of the child's eyes becoming tired.

To remove the battery

Remote Control Battery

1. Press the guide and lift the cover.

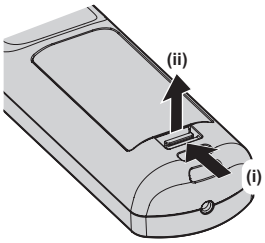

2. Remove the batteries.

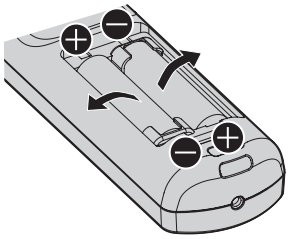

Brazil Only

Brasil Apenas

■ Manuseio de baterias usadas

BRASIL
Após o uso, as pilhas e/ou baterias deverão ser entregues ao estabelecimento comercial ou rede de assistência técnica autorizada.

Cobrir os terminais positivo (+) e negativo (-) com uma fita isolante adesiva, antes de depositar numa caixa destinada para o recolhimento. O contato entre partes metálicas pode causar vazamentos, gerar calor, romper a blindagem e produzir fogo. (Fig. 1)

Fig. 1
Como isolar os terminais

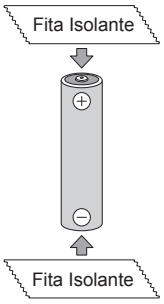

Não desmonte, não remova o invólucro, nem amasse a bateria. O gás liberado pela bateria pode irritar a garganta, danificar o lacre do invólucro ou o vazamento provocar calor, ruptura da blindagem e produzir fogo devido ao curto circuito dos terminais. Não incinere nem aqueça as baterias, elas não podem ficar expostas a temperaturas superiores a 100 °C (212 °F). O gás liberado pela bateria pode irritar a garganta, danificar o lacre do invólucro ou o vazamento provocar calor, ruptura da blindagem e produzir fogo devido ao curto circuito dos terminais provocado internamente.
Evite o contato com o liquido que vazar das baterias. Caso isto ocorra, lave bem a parte afetada com bastante água. Caso haja irritação, consulte um médico.

■ Remoção das baterias

1. Pressione a guia e levante a tampa.

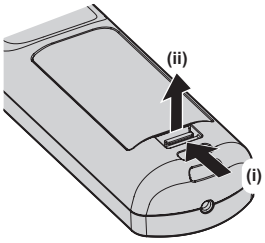

2. Remova as baterias.

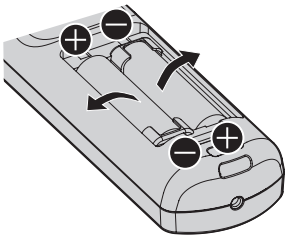

■ Trademarks

- Windows and Internet Explorer are registered trademarks or trademarks of Microsoft Corporation in the United States and other countries.
- Mac, Mac OS, and Safari are trademarks of Apple Inc., registered in the United States and other countries.
- PJLink™ is a registered trademark or pending trademark in Japan, the United States, and other countries and regions.
- HDMI, the HDMI Logo, and High-Definition Multimedia Interface are trademarks or registered trademarks of HDMI Licensing LLC in the United States and other countries.
- RoomView and Crestron RoomView are registered trademarks of Crestron Electronics, Inc.
  Crestron Connected™ and Fusion RV are trademarks of Crestron Electronics, Inc.
- HDBaseT™ is a trademark of HDBaseT Alliance.
- Art-Net™ Designed by and Copyright Artistic Licence Holdings Ltd
- DisplayPort is a trademark or registered trademark of the Video Electronics Standards Association.
- Adobe, Adobe Flash Player, and Adobe Reader are trademarks or registered trademarks of Adobe Systems Inc. in the United States and/or other countries.
- RealD 3D is a trademark of RealD Inc.
- Some of the fonts used in the on-screen menu are Ricoh bitmap fonts, which are manufactured and sold by Ricoh Company, Ltd.
- All other names, company names, and product names mentioned in this manual are trademarks or registered trademarks of their respective owners.
  Please note that the ® and ™ symbols are not specified in this manual.

■ Illustrations in this manual

- Illustrations of the projector, screen, and other parts may vary from the actual product.
- Illustrations of the projector with the power cord attached are only examples. The shape of the supplied power cords varies depending on the country where you purchased the product.

■ Reference pages

- Reference pages in this manual are indicated as (➡ page 00).

■ Term

- In this manual, the “Wireless/wired remote control unit” accessory is referred to as “Remote control”.

Features of the Projector

High resolution and clear picture quality

▶ Sharpness is enhanced by improvement of the unique picture quality correction technology and the optical system. The drawing performance of the moving image has also drastically improved by adopting the double speed driving of the DLP chip*1 and the unique image processing technology*1.

*1 Only for PT-DZ21K2, PT-DS20K2, and PT-DZ16K2

Easy setup and improved serviceability

▶ Inherited the highly flexible installability with the abundant lineup of the optional lenses and supporting of the portrait installation*1. The range of installation area has broadened by realizing equivalent of 50 % noise reduction in sound pressure level compared with the conventional models*2.

*1 Only for PT-DZ21K2, PT-DS20K2, and PT-DW17K2
*2 PT-DZ21K series, PT-DS20K series, PT-DW17K series, PT-DZ16K series

Improved cost-effectiveness in maintenance fee

▶ In addition to adoption of the extended-life filter, it has realized recommended lamp replacement interval of 3 000 hours*1. This will reduce the maintenance cost.

*1 1 000 hours when using the Replacement lamp unit (for portrait mode)

Quick Steps

For details, refer to the corresponding pages.

1. **Set up the projector.**
   (➡ page 33)

2. **Attach the projection lens (optional).**
   (➡ page 50)

3. **Connect with external devices.**
   (➡ page 52)

4. **Connect the power cord.**
   (➡ page 58)

5. **Switch on the projector.**
   (➡ page 59)

6. **Make initial settings.**
   (➡ page 60)
   - Take this step when you switch on the power for the first time after purchasing the projector.

7. **Select the input signal.**
   (➡ page 65)

8. **Adjust the image.**
   (➡ page 65)

Chapter 1 Preparation

This chapter describes things you need to know or check before using the projector.

Precautions for use

Cautions when transporting

- Before using the projector, remove the dust sponge from the mounting portion of the projection lens and store it for the future use. When transporting the projector, remove the projection lens before attaching the dust sponge. Otherwise dust will accumulate inside and may cause malfunctions.
- Transport the projector with 2 or more people. Failure to do so may drop the projector, which may result in damage or deformation of the projector, or injury.
- When transporting the projector, hold it securely by its bottom and avoid excessive vibration and impacts. They may damage the internal components and result in malfunctions.
- Do not transport the projector with the adjustable feet extended. Doing so may damage the adjustable feet.

Cautions when installing

■ After attaching the projection lens, be sure to attach the lens mount cover.

Otherwise dust will accumulate inside and may cause malfunctions.

■ Do not set up the projector outdoors.

The projector is designed for indoor use only.

■ Do not set up the projector in the following locations.

- Places where vibration and impacts occur such as in a car or vehicle: Doing so may cause damage to internal components or malfunction.
- Location close to sea or where corrosive gas may occur: The projector may fall due to corrosion. Also, failure to do so may shorten the life of the components and result in malfunctions.
- Near the exhaust of an air conditioner: Depending on the conditions of use, the screen may fluctuate in rare cases due to the heated air from the air exhaust port or the hot or cooled air. Make sure that the exhaust from the projector or other equipment, or the air from the air conditioner does not blow toward the front of the projector.
- Places with sharp temperature fluctuations such as near lights (studio lamps): Doing so may shorten the life of the lamp, or result in deformation of the outer case due to heat, which may cause malfunctions.

  The operating environment temperature of the projector should be between 0 °C (32 °F) and 45 °C (113 °F) when using it at elevations lower than 1 400 m (4 593') above sea level, and should be between 0 °C (32 °F) and 40 °C (104 °F) when using it at high altitudes (between 1 400 m (4 593') and 2 700 m (8 858') above sea level).

  If you use the smoke cut filter, the operating environment temperature should be between 0 °C (32 °F) and 35 °C (95 °F). However, it cannot be used at high altitudes.

  If you use the Replacement lamp unit (for portrait mode), the operating environment temperature should be between 0 °C (32 °F) and 40 °C (104 °F) when using it at elevations lower than 1 400 m (4 593') above sea level, and should be between 0 °C (32 °F) and 35 °C (95 °F) when using it at high altitudes (between 1 400 m (4 593') and 2 700 m (8 858') above sea level). If you use the Replacement lamp unit (for portrait mode) together with the smoke cut filter, the operating environment temperature should be between 0 °C (32 °F) and 30 °C (86 °F). (Only for PT-DZ21K2, PT-DS20K2, PT-DW17K2)
- Near high-voltage power lines or near motors: Doing so may interfere with the operation of the projector.
- Places where there is high-power laser equipment: Directing a laser beam onto the projection lens surface causes damage to the DLP chips.

■ Be sure to ask a specialized technician or your dealer when installing the projector on a ceiling.

The optional Ceiling mount bracket is required.

Model No.: ET-PKD520H (for high ceilings), ET-PKD520S (for low ceilings), ET-PKD520B (Projector Mount Bracket)

■ Ask a qualified technician or your dealer to install the cable wiring for DIGITAL LINK connection.

Image and sound may be disrupted if cable transmission characteristics cannot be obtained due to inadequate installation.

■ The projector may not work properly due to strong radio wave from the broadcast station or the radio.

If there is any facility or equipment which outputs strong radio waves near the installation location, install the projector at a location sufficiently far from the source of the radio waves. Or, wrap the LAN cable connected to the <DIGITAL LINK/LAN> terminal using a piece of metal foil or a metal pipe which is grounded at both ends.

■ Focus adjustment

The high clarity projection lens is thermally affected by the light from the light source, making the focus unstable in the period just after switching on the power. It is recommended that images be projected continuously for at least 30 minutes before the focus is adjusted.

■ Do not install the projector at elevations of 2 700 m (8 858') or higher above sea level.

Doing so may shorten the life of the components and result in malfunctions.

■ Do not use the projector tilted to the right or left.

Using the projector at a vertical angle that exceeds ±15° may reduce the life of components or result in malfunctions.

■ When using the Replacement lamp unit (for portrait mode), install the projector with the terminals surface facing down.

(Only for PT-DZ21K2, PT-DS20K2, PT-DW17K2)

Do not use the projector tilted to the right and left, front and back. Using the projector at an angle that exceeds 15° in either direction may reduce the life of the components or result in malfunctions.

The PT-DZ16K2 cannot be used with the portrait installation.

■ Cautions when setting up the projector

- Use the adjustable feet only for the floor standing installation and for adjusting the angle. Using them for other purposes may damage the projector.
- The adjustable feet can be removed if not needed in the installation. However, do not use the screw holes where the adjustable feet were removed to fix the projector in place.
  Also, insert only the screws that are specified in the user manual of the optional accessories into the screw holes of the adjustable feet. Failure to do so may cause damage to the projector.
- When installing the projector in a location other than on the floor using the adjustable feet or the ceiling mount, secure the projector using the six screw holes for ceiling mount (as shown in the figure).
  (Screw diameter: M6, tapping depth inside the projector: 30 mm (1-3/16"), torque: 4 ± 0.5 N·m)

Make a clearance of at least 5 mm (3/16") between the projector bottom and the setting surface by inserting spacers (metallic) between them.

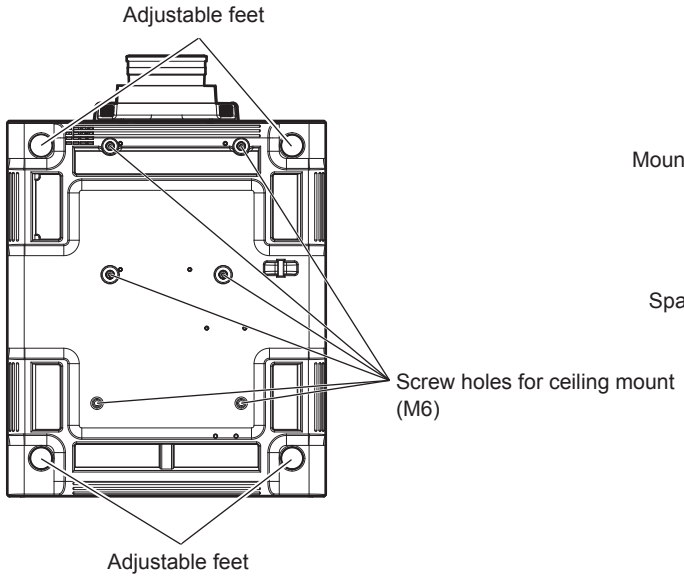

Positions of screw holes for ceiling mount and adjustable feet

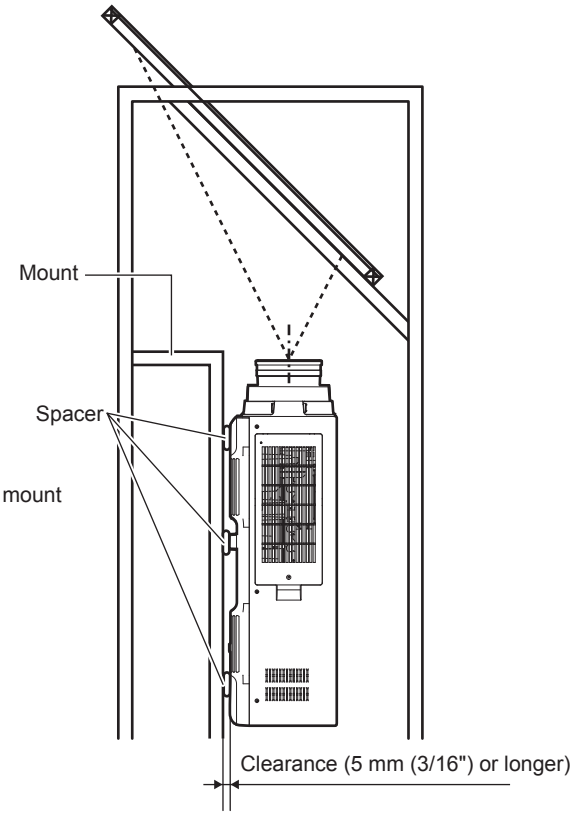

Ensure the inflow of air into the air intake port. Otherwise the projector may not work properly.

- Do not stack projectors on top of each other.
- Do not use the projector supporting it by the top.
- Do not use the projector tilted at an angle that exceeds ±15° from the horizontal plane.
- Do not block the ventilation ports (intake and exhaust) of the projector.
- Prevent hot and cool air from the air conditioning system to blow directly to the ventilation ports (intake and exhaust) of the projector.

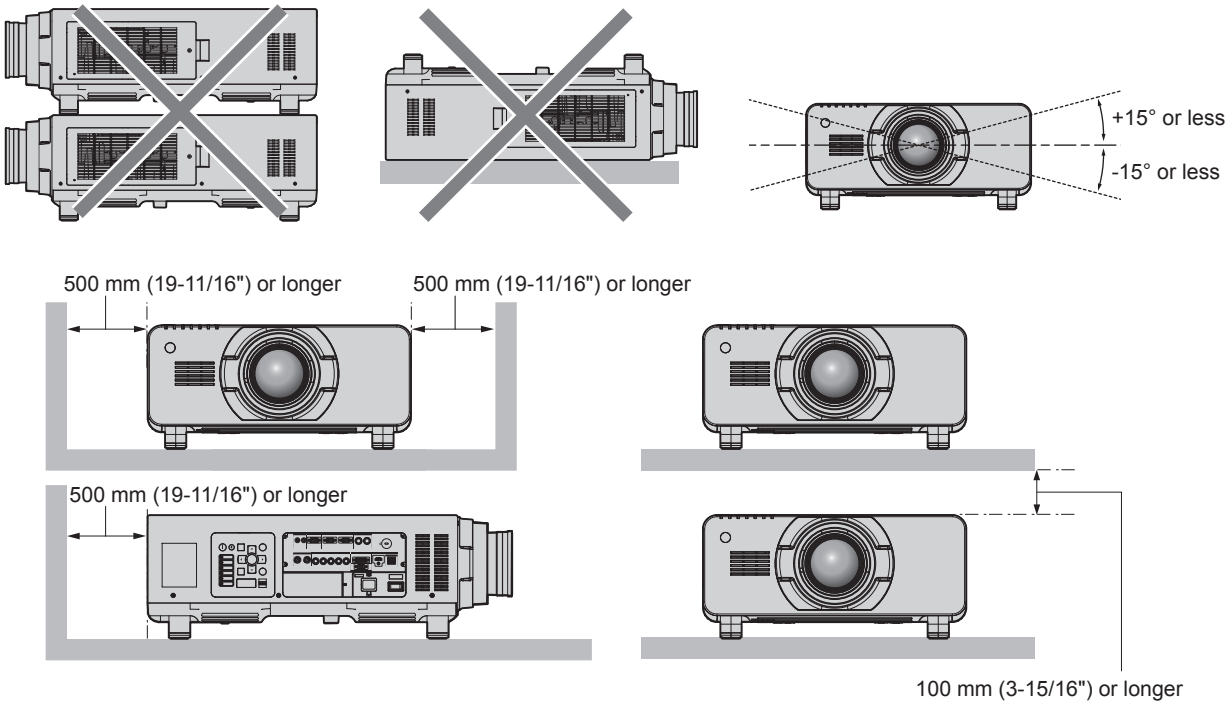

- Do not install the projector in a confined space.
  When installing the projector in a confined space, provide air conditioning or ventilation separately. Exhaust heat may accumulate when the ventilation is not enough, triggering the protection circuit of the projector.

Security

When using this product, take safety measures against the following incidents.
- Personal information being leaked via this product
- Unauthorized operation of this product by a malicious third party
- Interfering or stopping of this product by a malicious third party

Take sufficient security measures. (➡ pages 150, 174)
- Make your password difficult to guess as much as possible.
- Change your password periodically.
- Panasonic Corporation or its affiliate companies will never ask for your password directly. Do not divulge your password in case you receive such inquiries.
- The connecting network must be secured by a firewall, etc.
- Set a password for the web control and restrict the users who can log in.

DIGITAL LINK

“DIGITAL LINK” is a technology to transmit the video, audio, Ethernet, and serial control signals using a twisted pair cable by adding unique functions by Panasonic to the HDBaseT™ communication standard formulated by HDBaseT Alliance.

This projector supports the optional Panasonic DIGITAL LINK output supported device (Model No.: ET-YFB100G, ET-YFB200G) and peripheral devices by other manufacturers (twisted-pair-cable transmitters such as the “XTP transmitter” of Extron Electronics) that use the same HDBaseT™ standard. For the devices of other manufacturers that the operation has been verified with this projector, visit the Panasonic website (http://panasonic.net/avc/projector/). Note that the verification for devices of other manufacturers has been made for the items set by Panasonic Corporation, and not all the operations have been verified. For operation or performance problems caused by the devices of other manufacturers, contact the respective manufacturers. This projector does not support audio transmission because it is not equipped with audio function.

Art-Net

“Art-Net” is an Ethernet communication protocol based on the TCP/IP protocol.

By using the DMX controller and the application software, illumination and stage system can be controlled. Art-Net is made based on DMX512 communication protocol.

Early Warning Software

The projector supports “Early Warning Software”, which monitors the status of the display (projector or flat panel display) and the peripheral devices inside an intranet, and notifies of abnormality of such equipment and detects signs of possible abnormality. Also, maintenance can be performed in advance, because this software gives notification of approximate time to replace consumables of the display, to clean each part of the display, and to replace the components of the display.

Depending on the type of license, the number of displays that can be registered for monitoring varies. Limited to the first 90 days after installation in a computer, it is possible to register up to 2048 units of displays free of charge.

Download the software from the Panasonic website (http://panasonic.net/avc/projector/pass/). It is necessary to register and login to PASS*1 to download.

*1 PASS: Panasonic Professional Display and Projector Technical Support Website
Visit the Panasonic website (http://panasonic.net/avc/projector/pass/) for details.

Disposal

To dispose of the product, ask your local authorities or dealer for correct methods of disposal.

The lamp contains mercury. When disposing of used lamp units, contact your local authorities or dealer for correct methods of disposal.

Cautions on use

■ To get a good picture quality

In order to view a beautiful image in higher contrast, prepare an appropriate environment. Draw curtains or blinds over windows and turn off any lights near the screen to prevent outside light or light from indoor lamps from shining onto the screen.

■ Do not touch the surface of the projection lens with your bare hands.

If the surface of the projection lens becomes dirty from fingerprints or anything else, this will be magnified and projected onto the screen.
Attach the supplied lens cover to the optional projection lens when not using the projector.

■ DLP chips

- The DLP chips are precision-made. Note that in rare cases, pixels of high precision could be missing or always lit. Such a phenomenon does not indicate malfunction.
- Directing a high-power laser beam onto the projection lens surface can damage the DLP chips.

■ Do not move the projector or subject it to vibration or impact while it is operating.

Doing so may shorten the life of the built-in motor.

■ Lamp

The light source of the projector is a high-pressure mercury lamp.
A high-pressure mercury lamp has the following characteristics.

- The luminance of the lamp will decrease by duration of usage.
- The lamp may burst with a loud sound or have its service life shortened because of shock, chipping, or degradation due to cumulative runtime.
- The lamp life varies greatly depending on individual differences and usage conditions. In particular, frequent on/off switching of the power greatly deteriorate the lamp and affects the lamp life.
- Continuous use for over one week will deteriorate the lamp. The degradation of the lamp due to continuous use can be reduced by using the [PROJECTOR SETUP] menu → [LAMP RELAY].
- In rare cases, the lamps burst shortly after projection starts.
- The risk of bursting increases when the lamp is used beyond its replacement cycle. Make sure to replace the lamp unit regularly.
  (“When to replace the lamp unit” (➡ page 184), “How to replace the lamp unit” (➡ page 184))
- If the lamp bursts, gas contained inside of the lamp is released in the form of smoke.
- It is recommended that you store the replacement lamp unit as a contingency.

■ Computer and external device connections

- When connecting a computer or an external device, read this manual carefully regarding the use of power cords and shielded cables as well.

■ Viewing 3D images

(Only for PT-DZ21K2, PT-DS20K2)
The projector can display the 3D video signal input in various formats such as “frame packing”, “side by side”, etc.
You are required to prepare external devices for viewing 3D images (such as 3D eyewear, video signal output devices) which are suitable for your 3D system. Connections of the projector and external devices vary depends on the 3D system to be used, see the operating instructions of external devices you use.
Refer to “List of 3D compatible signals” (➡ page 212) for the types of 3D video signals that can be used with the projector.

Accessories

Make sure that the following accessories are provided with your projector. Numbers enclosed in < > show the number of accessories.

Wireless/wired remote control unit <1>
(N2QAYB001052)

Power cord
(K2CM3YY00007)

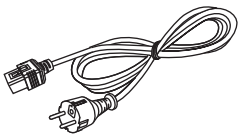

(K2CT3YY00014)

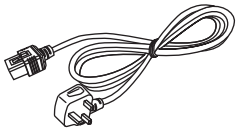

(K2CG3YY00035)

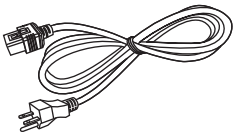

(K2CZ3YY00058)

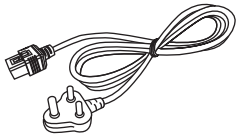

(K2CZ3YY00032)

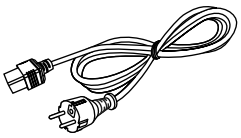

CD-ROM <1>
(TXFQB02WNLZ)

AA/R6 battery <2>

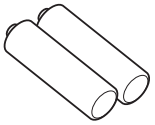

(For remote control unit)

Lens fixing screw <1>
(XYN4+J18FJ)

Attention

- After unpacking the projector, discard the power cord cap and packaging material properly.
- Do not use the supplied power cord for devices other than this projector.
- For missing accessories, consult your dealer.
- Store small parts in an appropriate manner, and keep them away from small children.

Note

- The type and number of the supplied power cords vary depending on the country or region where you purchased the product.
- The model numbers of accessories are subject to change without prior notice.

Contents of the supplied CD-ROM

The contents of the supplied CD-ROM are as follows.

Instruction/list (PDF)	Operating Instructions – Functional Manual	
	Multi Monitoring & Control Software Operating Instructions	
	Logo Transfer Software Operating Instructions	
	List of Compatible Device Models	This is a list of display models (projector or flat panel display) that are compatible with the software contained in the CD-ROM and their restrictions.
Software	Multi Monitoring & Control Software (Windows)	This software allows you to monitor and control multiple displays (projector or flat panel display) connected to the LAN.
	Logo Transfer Software (Windows)	This software allows you to transfer original images, such as company logos to be displayed when projection starts, to the projector.

Optional accessories

Optional accessories (product name)	Model No.	
Projection lens	Zoom lens	ET-D75LE6, ET-D75LE8, ET-D75LE10, ET-D75LE20, ET-D75LE30, ET-D75LE40
	Fixed-focus lens	ET-D75LE50, ET-D75LE90
Ceiling mount bracket	ET-PKD520H (for high ceilings), ET-PKD520S (for low ceilings), ET-PKD520B (Projector Mount Bracket)	
Frame	ET-PFD510	
Replacement lamp unit	ET-LAD520 (1 pc), ET-LAD520F (4 pcs)	
Replacement lamp unit (for portrait mode)	ET-LAD520P (1 pc), ET-LAD520PF (4 pcs) (Supported only for PT-DZ21K2, PT-DS20K2, PT-DW17K2)	
Replacement filter unit	ET-EMF510	
Early Warning Software (Basic license/3-year license)	ET-SWA100 Series*1	
Upgrade Kit	ET-UK20 (Supported only for PT-DZ21K2, PT-DS20K2)	
Auto Screen Adjustment Upgrade Kit	ET-CUK10*2 (Supported only for PT-DZ21K2, PT-DS20K2)	
Digital Interface Box	ET-YFB100G	
DIGITAL LINK Switcher	ET-YFB200G	

*1 The suffix of the Model No. differs according to the license type.
*2 Available worldwide except in the United States.

Note

- The model numbers of optional accessories are subject to change without prior notice.
- For details about the smoke cut filter, consult your dealer.

About your projector

Remote control

■ Front

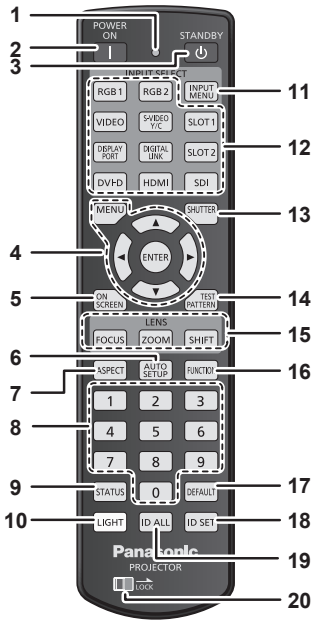

■ Top

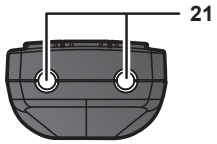

■ Bottom

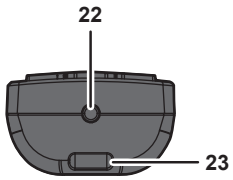

A strap can be attached depending on the usage.

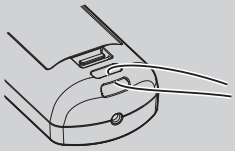

1 **Remote control indicator**
Blinks if any button in the remote control is pressed.

2 **Power on <|> button**
Sets the projector to projection mode when the <MAIN POWER> switch on the projector is set to <ON> and the power is turned off (standby mode).

3 **Power standby <⏻> button**
Sets the projector to the state where the projector is turned off (standby mode) when the <MAIN POWER> switch on the projector is set to <ON> and in projection mode.

4 **<MENU> button/<ENTER> button/▲▼◀▶ buttons**
Used to navigate through the menu screen. (➡ page 77)

5 **<ON SCREEN> button**
Switches the on-screen display function on (display) or off (hide). (➡ page 73)

6 **<AUTO SETUP> button**
Automatically adjusts the image display position while projecting the image.
[PROGRESS] is displayed while in automatic adjustment.
(➡ page 73)

7 **<ASPECT> button**
Switches the aspect ratio of the image. (➡ page 73)

8 **Number (<0> - <9>) buttons**
Used for entering an ID number or a password in a multiple projector environment.

9 **<STATUS> button**
Displays the projector information.

10 **<LIGHT> button**
Pressing this button lights up the remote control buttons. The lights will go off when the remote control operation goes idle for 10 seconds.

11 **<INPUT MENU> button**
Displays the input selection screen. (➡ page 72)

12 **Input selection buttons (<RGB1>, <RGB2>, <VIDEO>, <S-VIDEO Y/C>, <DIGITAL LINK>, <DVI-D>, <HDMI>, <SDI>)**
Switches the input signal to project. (➡ page 71)
The <DISPLAY PORT> button, the <SLOT1> button, and the <SLOT2> button are not used with the projector.
(SDI input is supported only for PT-DZ21K2, PT-DS20K2, and PT-DZ16K2.)

13 **<SHUTTER> button**
Used to temporarily turn off the image. (➡ page 72)

14 **<TEST PATTERN> button**
Displays the test pattern. (➡ page 74)

15 **Lens buttons (<FOCUS>, <ZOOM>, <SHIFT>)**
Adjusts the projection lens. (➡ page 65)

16 **<FUNCTION> button**
Assigns a frequently used operation as a shortcut button.
(➡ page 74)

17 **<DEFAULT> button**
Resets the content of the sub-menu to the factory default.
(➡ page 78)

18 **<ID SET> button**
Sets the ID number of the remote control in a multiple projector environment. (➡ page 30)

19 **<ID ALL> button**
Used to simultaneously control all the projectors with a single remote control in a multiple projector environment.
(➡ page 30)

20 **<LOCK> button**
Used to prevent unintended operation by careless pressing of the buttons and prevent draining the remote control batteries. Operation of the buttons on the remote control is disabled by sliding the <LOCK> button toward the arrow.

21 **Remote control signal transmitter**

22 **Remote control wired terminal**
This is a terminal used to connect to the projector via a cable when the remote control is used as a wired remote control.
(➡ page 31)

23 **Strap hole**

Attention

- Do not drop the remote control.
- Avoid contact with liquids or moisture.
- Do not attempt to modify or disassemble the remote control.
- Do not swing the remote control holding onto the strap when a strap is attached.
- Observe the following instructions that are indicated on the caution label at the back of the remote control:
  - Do not use old battery with new one.
  - Do not use batteries other than the type specified.
  - Be sure the batteries are inserted properly.

  For other instructions, read the instructions related to batteries that are described in “Read this first!”.

Caution label at the back of the remote control

Note

- When operating the remote control by directly pointing the remote control signal receiver of the projector, operate the remote control at a distance approx. 30 m (98'5") or shorter from the remote control signal receiver. The remote control can control at angles of up to ±15° vertically and ±30° horizontally, but the effective control range may be reduced.
- If there are any obstacles between the remote control and the remote control signal receiver, the remote control may not operate properly.
- The signal will be reflected off the screen. However, the operating range may be limited from light reflection loss due to the screen material.
- If the remote control signal receiver directly receives strong light, such as fluorescent light, the remote control may not operate properly. Use it in a place distant from the light source.
- The power indicator <ON (G)/STANDBY (R)> will blink if the projector receives a remote control signal.

Projector body

■ Front

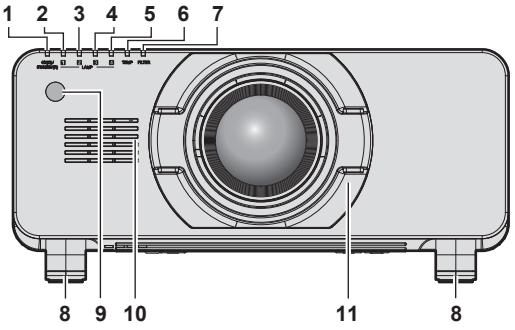

■ Side

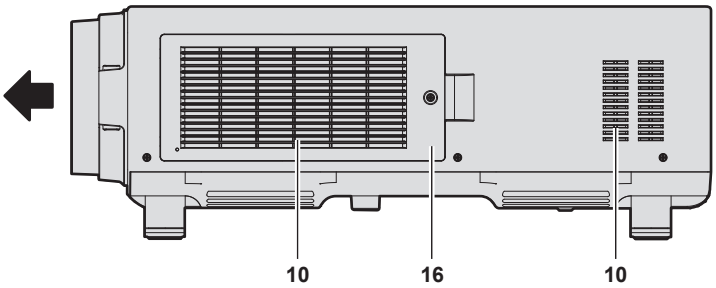

■ Rear

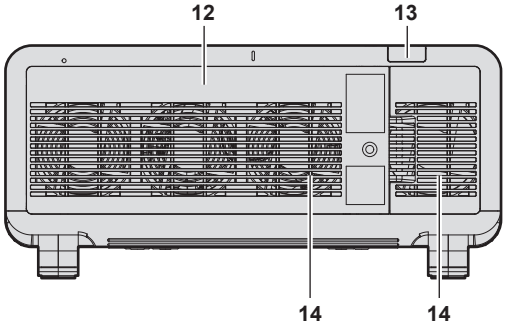

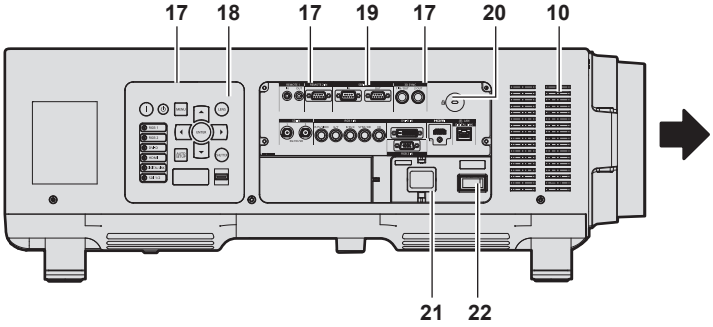

■ Bottom

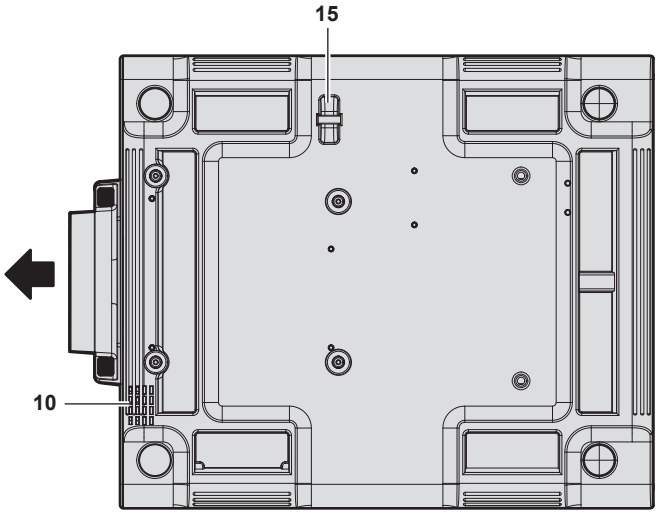

: Projection direction

WARNING

Keep your hands and other objects away from the air exhaust port.

- Keep your hands and face away.
- Do not insert your fingers.
- Keep heat-sensitive objects away.

Heated air from the air exhaust port can cause burns, injury, or deformations.

1 **Power indicator <ON (G)/STANDBY (R)>**
Indicates the status of the power.

2 **Lamp indicator <LAMP1>**
Indicates the status of lamp 1.

3 **Lamp indicator <LAMP2>**
Indicates the status of lamp 2.

4 **Lamp indicator <LAMP3>**
Indicates the status of lamp 3.

5 **Lamp indicator <LAMP4>**
Indicates the status of lamp 4.

6 **Temperature indicator <TEMP>**
Indicates the internal temperature status.

7 **Filter indicator <FILTER>**
Indicates the status of the air filter unit.

8 **Adjustable feet**
Adjusts the projection angle.

9 **Remote control signal receiver (front)**

10 **Air intake port**

11 **Lens mount cover**

12 **Lamp unit cover**

13 **Remote control signal receiver (rear)**

14 **Air exhaust port**

15 **Burglar hook port**
Attaches a burglar prevention cable, etc.

16 **Air filter cover**
The air filter unit is inside.

17 Lighting for the control panel and connecting terminals

18 Control panel (➡ page 28)

19 Connecting terminals (➡ page 29)

20 Security slot
This security slot is compatible with the Kensington security cables.

21 <AC IN> terminal
Connect the supplied power cord.

22 <MAIN POWER> switch
Turns on/off the main power.

Attention

- Do not block the ventilation ports (intake and exhaust) of the projector.

■ Control panel

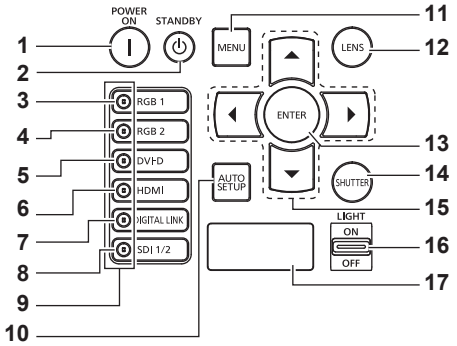

1 Power on <|> button
Sets the projector to projection mode when the <MAIN POWER> switch on the projector is set to <ON> and the power is turned off (standby mode).

2 Power standby <⏻> button
Sets the projector to the state where the projector is turned off (standby mode) when the <MAIN POWER> switch on the projector is set to <ON> and in projection mode.

3 <RGB1> button
Switches the input to RGB1.

4 <RGB2> button
Switches the input to RGB2.

5 <DVI-D> button
Switches the input to DVI-D.

6 <HDMI> button
Switches the input to HDMI.

7 <DIGITAL LINK> button
Switches the input to DIGITAL LINK.

8 <SDI 1/2> button
Switches the input to SDI.
(Only for PT-DZ21K2, PT-DS20K2, PT-DZ16K2)

9 Input selection terminal indicator
Indicator that shows the selected input terminal. This indicator lights up when a video signal is being input to the selected terminal, and blinks when there is no video signal being input.

10 <AUTO SETUP> button
Automatically adjusts the image display position while the image is projected. [PROGRESS] is displayed while in automatic adjustment. (➡ page 73)

11 <MENU> button
Displays or hides the main menu. (➡ page 77)
Returns to the previous menu when a sub-menu is displayed.
If you press the <MENU> button on the control panel for at least three seconds while the on-screen display is off (hidden), the on-screen display is turned on.

12 <LENS> button
Adjusts the focus, zoom, and shift (position) of the lens.

13 <ENTER> button
Determines and executes an item in the menu screen.

14 <SHUTTER> button
Used to temporarily turn off the image. (➡ page 72)

15 ▲▼◀▶ buttons
Used to select items in the menu screen, change settings, and adjust levels.
Also used to enter a password in [SECURITY] or enter characters.

16 <LIGHT> switch
This is the lighting switch for the connecting terminals and control panel.

17 Self-diagnosis display
Automatically displays the value of the input supply voltage, or details of errors or warnings when they occur.
(➡ pages 75, 190)

■ Connecting terminals

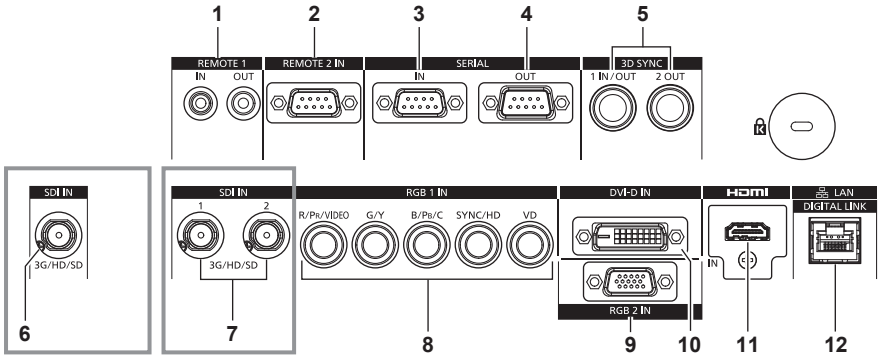

1 **<REMOTE 1 IN> terminal/<REMOTE 1 OUT> terminal**
These are terminals to connect the remote control for serial control in a multiple projector environment.

2 **<REMOTE 2 IN> terminal**
This is a terminal to remotely control the projector using the external control circuit.

3 **<SERIAL IN> terminal**
This is the RS-232C compatible terminal to externally control the projector by connecting a computer.

4 **<SERIAL OUT> terminal**
This is a terminal to output the signal connected to the <SERIAL IN> terminal.

5 **<3D SYNC 1 IN/OUT> terminal/<3D SYNC 2 OUT> terminal**
These are terminals to input or output control signals when using the projector in 3D systems.
(Only for PT-DZ21K2, PT-DS20K2)

6 **<SDI IN> terminal**
This is a terminal to input SDI signals.
(Only for PT-DZ16K2)

7 **<SDI IN 1> terminal/<SDI IN 2> terminal**
These are terminals to input SDI signals.
(Only for PT-DZ21K2, PT-DS20K2)

8 **<RGB 1 IN> terminals (<R/P_R/VIDEO>, <G/Y>, <B/P_B/C>, <SYNC/HD>, <VD>)**
These are terminals to input RGB signals, YC_BC_R/YP_BP_R signals, Y/C signals, or video signals.

9 **<RGB 2 IN> terminal**
This is a terminal to input RGB signals or YC_BC_R/YP_BP_R signals.

10 **<DVI-D IN> terminal**
This is the terminal to input DVI-D signals.

11 **<HDMI IN> terminal**
This is the terminal to input HDMI signals.

12 **<DIGITAL LINK/LAN> terminal**
This is the LAN terminal to connect to the network. This is also used when connecting a video signal transmission device via the LAN terminal.

Attention

- When a LAN cable is directly connected to the projector, the network connection must be made indoors.

Preparing the remote control

Inserting and removing the batteries

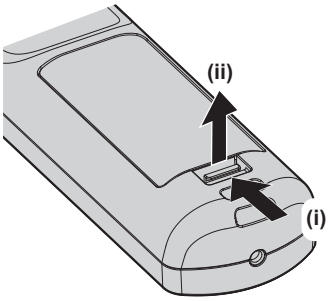

Fig. 1

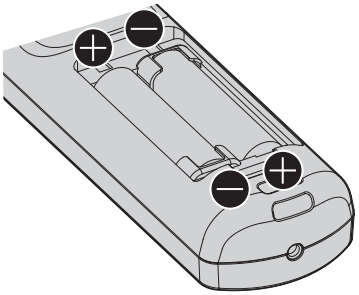

Fig. 2

1) Open the cover. (Fig. 1)

2) Insert the batteries and close the cover (insert the ⊖ side first). (Fig. 2)

- When removing the batteries, perform the steps in reverse order.

When using the multiple projectors

When you use the multiple projectors together, you can operate all the projectors simultaneously or each projector individually using single remote control, if a unique ID number is assigned to each projector.

When using the projectors by setting the ID numbers, set the ID number of the projector body after initial settings have been completed. Then, set the ID number of the remote control. For initial settings, refer to “When the initial setting screen is displayed” (➡ page 60).

The factory default ID number of the projector (projector body and remote control) is set to [ALL], so you can use it as it is. Set the ID numbers of the projector body and remote control as necessary.

For details on setting the ID number of the remote control, refer to “Setting ID number of the remote control” (➡ page 75).

Note

- Set the ID number of the projector body from the [PROJECTOR SETUP] menu → [PROJECTOR ID].

Connecting the remote control to the projector with a cable

If you control the multiple projectors with a single remote control, use commercially available M3 stereo mini jack cables to connect to the <REMOTE 1 IN>/<REMOTE 1 OUT> terminals of the projectors.
The remote control is effective even in places where an obstacle stands in the light path or where devices are susceptible to outside light.

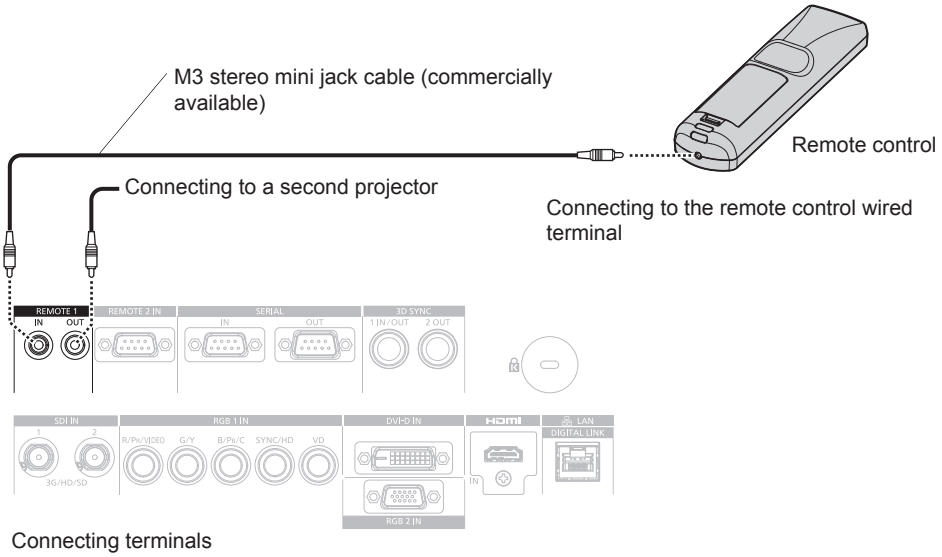

Connecting terminals

Attention

- Use a cable that is 15 m (49'3") or shorter, with 2 core shielded. The remote control may not operate when the length of the cable exceeds 15 m (49'3") or when the shielding of the cable is inadequate.

Chapter 2 Getting Started

This chapter describes things you need to do before using the projector such as the setup and connections.

Setting up

Installation mode

The installation modes of the projector are as follows. Set the [PROJECTOR SETUP] menu → [PROJECTION METHOD] (➡ page 126) depending on the installation mode.

- For the portrait setting, use the optional Replacement lamp unit (for portrait mode) (Model No.: ET-LAD520P (1 pc), ET-LAD520PF (4 pcs)). (Only for PT-DZ21K2, PT-DS20K2, PT-DW17K2)
  The PT-DZ16K2 cannot be used with the portrait installation.

Mounting on the ceiling and projecting forward

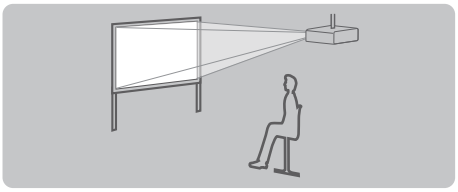

Menu item	Setting value
[PROJECTION METHOD]	[FRONT/CEILING]

Setting on a desk/floor and projecting from rear
(Using the translucent screen)

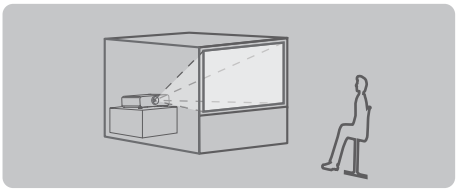

Menu item	Setting value
[PROJECTION METHOD]	[REAR/FLOOR]

Mounting on the ceiling and projecting from rear
(Using the translucent screen)

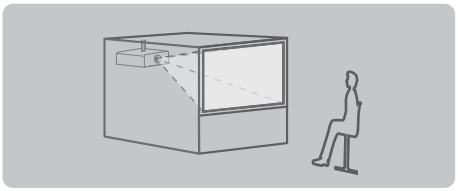

Menu item	Setting value
[PROJECTION METHOD]	[REAR/CEILING]

Setting on a desk/floor and projecting forward

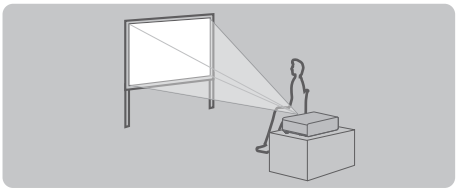

Menu item	Setting value
[PROJECTION METHOD]	[FRONT/FLOOR]

Portrait setting and projecting from the rear
(Using the translucent screen)

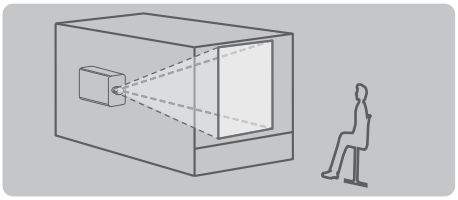

Menu item	Setting value
[PROJECTION METHOD]	[REAR/FLOOR]

Portrait setting and projecting forward

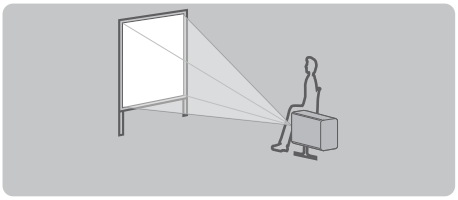

Menu item	Setting value
[PROJECTION METHOD]	[FRONT/FLOOR]

Note

- In the portrait setting, the on-screen menu is displayed sideways.
  To display the on-screen menu in portrait, go to the [DISPLAY OPTION] menu → [ON-SCREEN DISPLAY] (➡ page 119) and change the [OSD ROTATION] setting.
  (Only for PT-DZ21K2, PT-DS20K2, PT-DW17K2)

Parts for ceiling mount (optional)

The projector can be installed on the ceiling by combining the optional Ceiling mount bracket (Model No.: ET-PKD520H (for high ceilings), ET-PKD520S (for low ceilings)) and Ceiling mount bracket (Model No.: ET-PKD520B (Projector Mount Bracket)).

- Be sure to use the ceiling mount bracket specified for this projector.
- Refer to the Installation Instructions of the ceiling mount bracket when installing and setting up the projector.

Attention

- To ensure projector performance and security, installation of the Ceiling mount bracket must be carried out by your dealer or a qualified technician.

Projected image and throw distance

Install the projector referring to the projected image size and projection distance. Image size and image position can be adjusted in accordance with the screen size and screen position. When the fixed-focus lens (Model No.: ET-D75LE90) is attached, the projection relation between the screen and the projector differs from that of other lenses. Refer to “For fixed-focus lens (Model No.: ET-D75LE90)” (➡ page 35) for details.

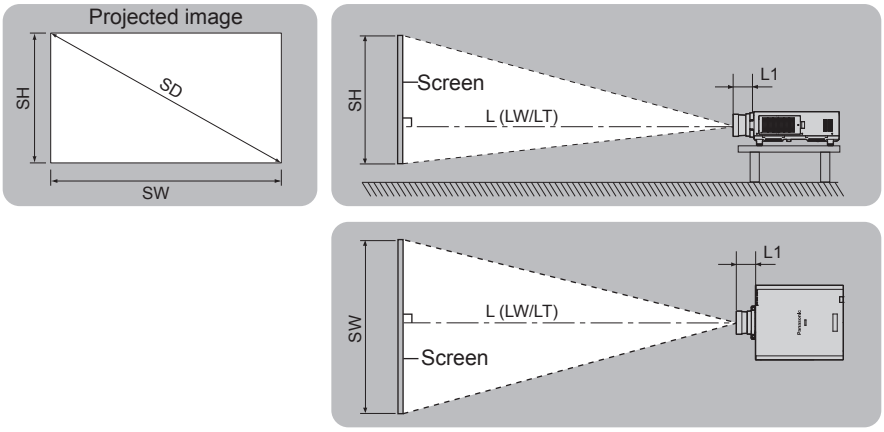

(Unit: m)

L (LW/LT)*1	Projection distance
L1	Lens protrusion dimension
SH	Projected image height
SW	Projected image width
SD	Projected image size

*1 LW: Minimum projection distance when the zoom lens is used
LT: Maximum projection distance when the zoom lens is used

(Unit: m)

Projection lens Model No.	Dimension for L1 (approximate value)
ET-D75LE6	0.212
ET-D75LE8	0.254
ET-D75LE10	0.125
ET-D75LE20	0.121
ET-D75LE30	0.121
ET-D75LE40	0.124
ET-D75LE50	0.203

■ For fixed-focus lens (Model No.: ET-D75LE90)

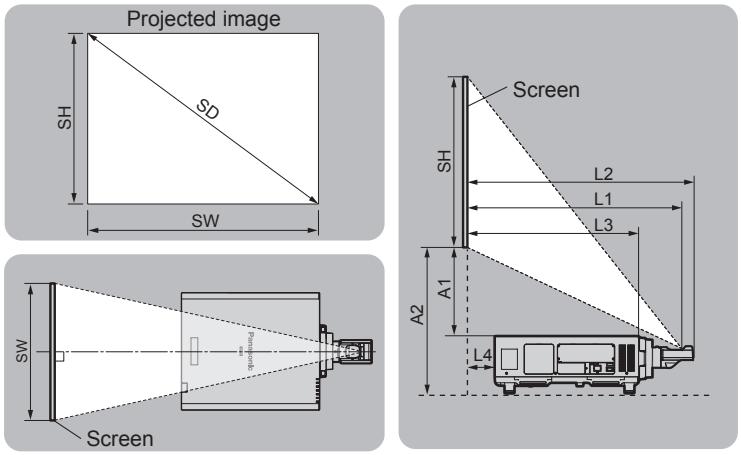

(Unit: m)

SH	Projected image height
SW	Projected image width
SD	Projected image size
L1	Projection distance (from the screen to the mirror reflection surface*1)
L2	Distance between the projector and the screen (from the screen to the tip of the lens)
L3	Distance between the projector and the screen (from the screen to the front surface of the projector)
L4	Distance between the projector and the screen (from the screen to the rear surface of the projector)
A1	Distance between the projector and the screen (from the screen bottom edge to the projector top)
A2	Distance between the projector and the screen (from the screen bottom edge to the projector bottom)

*1 The mirror reflection surface cannot be seen from the outside, because it is located inside the fixed-focus lens.

(Unit: m)

Distance between projector and screen	Formula
L2	= L1*1 + 0.029
L3	= L1*1 – 0.277
L4	= L1*1 – 1.007
A2	= A1*1 + 0.291

*1 For details of calculating values, refer to “Formula for calculating the projection distance per projection lens” (➡ page 47).

Attention

- Before setting up, read “Precautions for use” (➡ page 18).
  Especially when the fixed-focus lens (Model No.: ET-D75LE90) is used, install the projector so that its back plane is parallel to the screen, making the projected image rectangular.
  The vertical keystone distortion in moderate range can be corrected by the [POSITION] menu → [GEOMETRY] → [KEYSTONE] → [VERTICAL KEYSTONE] (➡ page 94) even after the projector is installed. For the range that can be corrected, refer to “[GEOMETRY] projection range” (➡ page 36).
- Do not use the projector and the high-powered laser equipment in the same room. The DLP chips can be damaged if a laser beam hits the projection lens surface.
- The dimension of L4 is not the distance between the rear of the projector body and the wall, but the distance between the rear of the projector body and the screen surface. Install the projector with 500 mm (19-11/16") or larger space between the rear of the projector body and the wall or any object so that the ventilation is not obstructed.
  When installing the projector in a confined space, provide air conditioning or ventilation separately. Exhaust heat may accumulate when the ventilation is not enough, triggering the protection circuit of the projector.

[GEOMETRY] projection range

[VERTICAL KEYSTONE] (viewed from the side)	[HORIZONTAL KEYSTONE] (viewed from above)
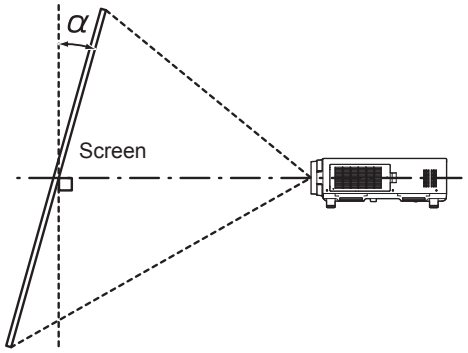	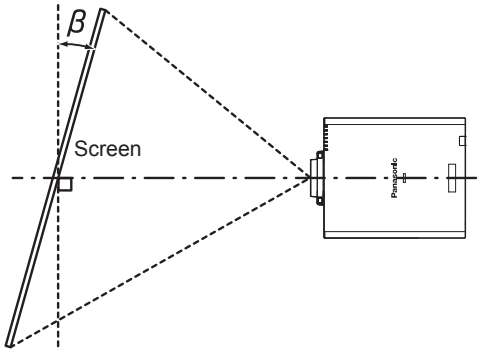
Vertical arc correction (viewed from the side)	**Horizontal arc correction (viewed from above)**
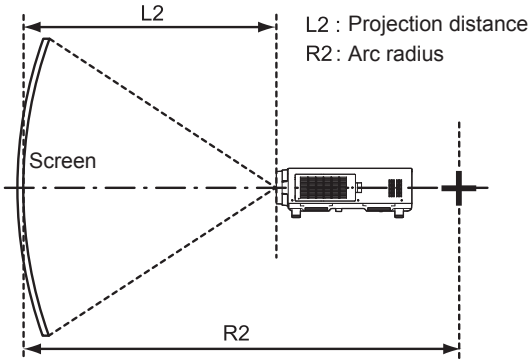	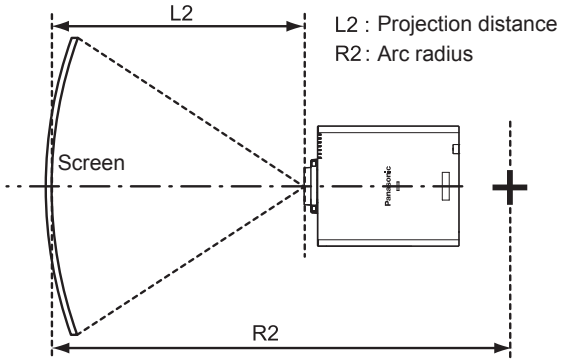
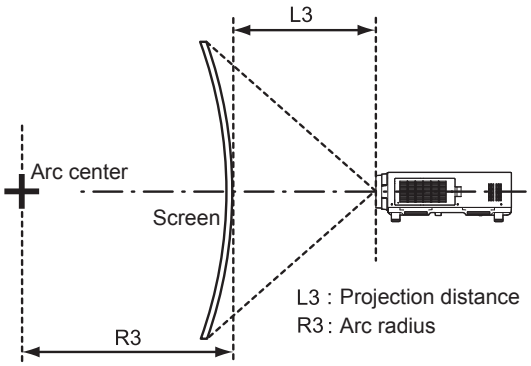	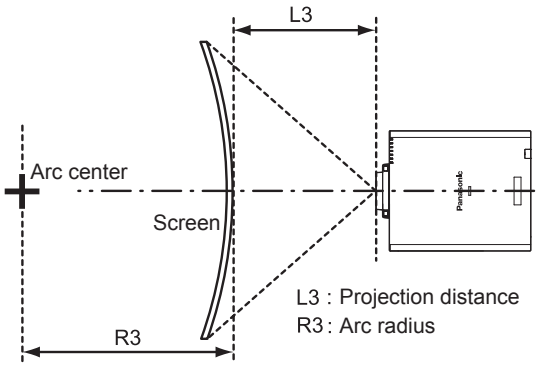

Standard status

Projection lens Model No.	Only [KEYSTONE] used		[KEYSTONE] and [CURVED] used together				Only [CURVED] used	
	Vertical keystone correction angle α (°)	Horizontal keystone correction angle β (°)	Vertical keystone correction angle α (°)	Horizontal keystone correction angle β (°)	Min. value of R2/L2	Min. value of R3/L3	Min. value of R2/L2	Min. value of R3/L3
ET-D75LE6	±28	±15	±10	±10	1.6	3.9	0.9	2.3
ET-D75LE8	±40	±15	±20	±15	0.2	0.4	0.2	0.3
ET-D75LE10	±40	±15	±20	±15	1.1	2.6	0.6	1.5
ET-D75LE20	±40	±15	±20	±15	0.9	1.7	0.5	1.0
ET-D75LE30	±40	±15	±20	±15	0.6	1.2	0.4	0.7
ET-D75LE40	±40	±15	±20	±15	0.4	0.7	0.2	0.4
ET-D75LE50	±22	±15	±8	±8	2.0	4.9	1.2	2.9
ET-D75LE90*1	+5 / –0	0	—	—	—	—	—	—

*1 Only the vertical keystone correction angle can be corrected in the direction in which the projector body moves away from the screen.

When using the optional Upgrade Kit (Model No.: ET-UK20)

(Only for PT-DZ21K2, PT-DS20K2)

Projection lens Model No.	Only [KEYSTONE] used*1		[KEYSTONE] and [CURVED] used together				Only [CURVED] used	
	Vertical keystone correction angle α (°)	Horizontal keystone correction angle β (°)	Vertical keystone correction angle α (°)	Horizontal keystone correction angle β (°)	Min. value of R2/L2	Min. value of R3/L3	Min. value of R2/L2	Min. value of R3/L3
ET-D75LE6	±28	±15	±10	±10	1.2	3.0	0.7	1.7
ET-D75LE8	±45	±40	±20	±15	0.2	0.3	0.1	0.2
ET-D75LE10	±40	±40	±20	±15	0.9	2.0	0.5	1.1
ET-D75LE20	±40	±40	±20	±15	0.7	1.3	0.4	0.7
ET-D75LE30	±45	±40	±20	±15	0.5	0.9	0.3	0.5
ET-D75LE40	±45	±40	±20	±15	0.3	0.5	0.2	0.3
ET-D75LE50	±22	±15	±8	±8	1.5	3.7	0.9	2.2
ET-D75LE90*2	+5 / –0	0	—	—	—	—	—	—

*1 When [VERTICAL KEYSTONE] and [HORIZONTAL KEYSTONE] are used simultaneously, correction cannot be made exceeding total of 55°.
*2 Only the vertical keystone correction angle can be corrected in the direction in which the projector body moves away from the screen.

Note

- When [GEOMETRY] is used, the focus of the entire screen may be lost as correction increases.
- Make the curved screen a circular arc shape with one part of a perfect circle removed.
- Adjustment range of the [GEOMETRY] items may not match the listed projection range depending on the projection lens. Use this projector within the projection range, otherwise the correction may not work.

Projection distance of each projection lens

A ±5 % error in listed projection distances may occur.
When [GEOMETRY] is used, distance is corrected to become smaller than the specified image size.

For PT-DZ21K2

■ When the image aspect ratio is 16:10

(Unit: m)

Lens type			Zoom lens											
Projection lens Model No.			ET-D75LE6		ET-D75LE10		ET-D75LE20		ET-D75LE30		ET-D75LE40		ET-D75LE8	
Throw ratio*1			0.9-1.1:1		1.3-1.7:1		1.7-2.4:1		2.4-4.7:1		4.6-7.4:1		7.3-13.8:1	
Projected image size			Projection distance (L)											
Diagonal (SD)	Height (SH)	Width (SW)	Min. (LW)	Max. (LT)	Min. (LW)	Max. (LT)	Min. (LW)	Max. (LT)	Min. (LW)	Max. (LT)	Min. (LW)	Max. (LT)	Min. (LW)	Max. (LT)
1.78 (70")	0.942	1.508	1.35	1.62	1.90	2.46	2.46	3.58	3.56	6.94	6.87	11.04	10.78	20.56
2.03 (80")	1.077	1.723	1.55	1.86	2.19	2.83	2.82	4.11	4.08	7.96	7.88	12.65	12.37	23.55
2.29 (90")	1.212	1.939	1.76	2.10	2.47	3.20	3.19	4.64	4.61	8.98	8.88	14.25	13.97	26.54
2.54 (100")	1.346	2.154	1.96	2.34	2.76	3.56	3.55	5.17	5.13	9.99	9.88	15.85	15.57	29.53
3.05 (120")	1.615	2.585	2.36	2.82	3.32	4.30	4.28	6.22	6.18	12.03	11.89	19.05	18.76	35.50
3.81 (150")	2.019	3.231	2.96	3.55	4.18	5.40	5.37	7.81	7.75	15.08	14.90	23.85	23.54	44.47
5.08 (200")	2.692	4.308	3.97	4.75	5.60	7.24	7.19	10.45	10.38	20.16	19.92	31.86	31.52	59.41
6.35 (250")	3.365	5.385	4.98	5.96	7.02	9.07	9.00	13.09	13.00	25.25	24.95	39.86	39.49	74.36
7.62 (300")	4.039	6.462	5.99	7.17	8.44	10.91	10.82	15.73	15.62	30.34	29.97	47.87	47.47	89.30
8.89 (350")	4.712	7.539	6.99	8.37	9.86	12.74	12.64	18.37	18.24	35.42	34.99	55.87	55.44	104.24
10.16 (400")	5.385	8.616	8.00	9.58	11.28	14.58	14.46	21.01	20.86	40.51	40.01	63.87	63.42	119.19
12.70 (500")	6.731	10.770	10.01	11.99	14.12	18.25	18.09	26.29	26.11	50.68	50.05	79.88	79.37	149.08
15.24 (600")	8.077	12.923	12.03	14.40	16.96	21.92	21.73	31.58	31.35	60.85	60.09	95.89	95.32	178.96
17.78 (700")	9.423	15.077	14.04	16.82	19.80	25.60	25.36	36.86	36.60	71.02	70.13	111.90	111.27	—
20.32 (800")	10.770	17.231	16.06	19.23	22.64	29.27	29.00	42.14	41.84	81.19	80.17	127.91	127.23	—
22.86 (900")	12.116	19.385	18.07	21.64	25.48	32.94	32.63	47.42	47.09	91.36	90.21	143.92	143.18	—
25.40 (1000")	13.462	21.539	20.08	24.06	28.33	36.61	36.27	52.70	52.33	101.53	100.25	159.93	159.13	—

Lens type			Fixed-focus lens			
Projection lens Model No.			ET-D75LE90*2			ET-D75LE50
Throw ratio*1			0.36:1			0.7:1
Projected image size			Projection distance (L1)	Distance between projector and screen		Projection distance (L)
Diagonal (SD)	Height (SH)	Width (SW)		(L4)	(A1)	Fixed
1.78 (70")	0.942	1.508	—	—	—	1.01
2.03 (80")	1.077	1.723	—	—	—	1.16
2.29 (90")	1.212	1.939	—	—	—	1.32
2.54 (100")	1.346	2.154	—	—	—	1.47
3.05 (120")	1.615	2.585	0.94	–0.06	0.26 - 0.34	1.78
3.81 (150")	2.019	3.231	1.18	0.17	0.35 - 0.46	2.24
5.08 (200")	2.692	4.308	1.56	0.55	0.50 - 0.65	3.01
6.35 (250")	3.365	5.385	1.95	0.94	0.66 - 0.84	3.78
7.62 (300")	4.039	6.462	2.33	1.32	0.81 - 1.03	4.56
8.89 (350")	4.712	7.539	2.72	1.71	0.96 - 1.22	5.33
10.16 (400")	5.385	8.616	3.10	2.09	1.12 - 1.41	6.10
12.70 (500")	6.731	10.770	3.87	2.86	1.43 - 1.79	7.64
15.24 (600")	8.077	12.923	4.64	3.63	1.74 - 2.17	9.18
17.78 (700")	9.423	15.077	—	—	—	10.72
20.32 (800")	10.770	17.231	—	—	—	12.27
22.86 (900")	12.116	19.385	—	—	—	13.81
25.40 (1000")	13.462	21.539	—	—	—	15.35

*1 The throw ratio is based on the value during projection with the projected image size of 3.81 m (150").
*2 When the fixed-focus lens (Model No.: ET-D75LE90) is attached, the projection relation between the screen and the projector differs from that of other lenses. Refer to “For fixed-focus lens (Model No.: ET-D75LE90)” (➡ page 35) for details.

■ When the image aspect ratio is 16:9

(Unit: m)

Lens type			Zoom lens											
Projection lens Model No.			ET-D75LE6		ET-D75LE10		ET-D75LE20		ET-D75LE30		ET-D75LE40		ET-D75LE8	
Throw ratio*1			0.9-1.1:1		1.3-1.7:1		1.7-2.4:1		2.4-4.7:1		4.6-7.4:1		7.3-13.8:1	
Projected image size			Projection distance (L)											
Diagonal (SD)	Height (SH)	Width (SW)	Min. (LW)	Max. (LT)	Min. (LW)	Max. (LT)	Min. (LW)	Max. (LT)	Min. (LW)	Max. (LT)	Min. (LW)	Max. (LT)	Min. (LW)	Max. (LT)
1.78 (70")	0.872	1.550	1.39	1.66	1.96	2.53	2.53	3.68	3.66	7.14	7.07	11.36	11.09	21.14
2.03 (80")	0.996	1.771	1.60	1.91	2.25	2.91	2.91	4.23	4.20	8.19	8.10	13.00	12.73	24.21
2.29 (90")	1.121	1.992	1.81	2.16	2.54	3.29	3.28	4.77	4.74	9.23	9.13	14.65	14.37	27.29
2.54 (100")	1.245	2.214	2.01	2.41	2.83	3.67	3.65	5.31	5.28	10.28	10.16	16.29	16.01	30.36
3.05 (120")	1.494	2.657	2.43	2.90	3.42	4.42	4.40	6.40	6.35	12.37	12.23	19.58	19.29	36.50
3.81 (150")	1.868	3.321	3.05	3.65	4.29	5.55	5.52	8.03	7.97	15.50	15.32	24.52	24.21	45.72
5.08 (200")	2.491	4.428	4.08	4.89	5.75	7.44	7.39	10.74	10.67	20.73	20.48	32.75	32.40	61.08
6.35 (250")	3.113	5.535	5.12	6.13	7.21	9.33	9.26	13.46	13.36	25.96	25.64	40.97	40.60	76.44
7.62 (300")	3.736	6.641	6.15	7.37	8.67	11.21	11.13	16.17	16.06	31.18	30.80	49.20	48.80	91.79
8.89 (350")	4.358	7.748	7.19	8.61	10.13	13.10	12.99	18.88	18.75	36.41	35.96	57.43	57.00	107.15
10.16 (400")	4.981	8.855	8.22	9.85	11.59	14.99	14.86	21.60	21.45	41.64	41.12	65.65	65.19	122.51
12.70 (500")	6.226	11.069	10.29	12.33	14.51	18.76	18.60	27.03	26.84	52.09	51.44	82.11	81.59	153.23
15.24 (600")	7.472	13.283	12.36	14.81	17.44	22.54	22.33	32.46	32.23	62.54	61.76	98.56	97.98	183.95
17.78 (700")	8.717	15.497	14.43	17.29	20.36	26.31	26.07	37.89	37.62	73.00	72.08	115.02	114.38	—
20.32 (800")	9.962	17.710	16.50	19.77	23.28	30.09	29.81	43.31	43.01	83.45	82.41	131.47	130.77	—
22.86 (900")	11.207	19.924	18.57	22.25	26.20	33.86	33.54	48.74	48.40	93.90	92.73	147.92	147.17	—
25.40 (1000")	12.453	22.138	20.64	24.73	29.12	37.63	37.28	54.17	53.79	104.36	103.05	164.38	163.56	—

Lens type			Fixed-focus lens			
Projection lens Model No.			ET-D75LE90*2			ET-D75LE50
Throw ratio*1			0.36:1			0.7:1
Projected image size			Projection distance (L1)	Distance between projector and screen		Projection distance (L)
Diagonal (SD)	Height (SH)	Width (SW)		(L4)	(A1)	Fixed
1.78 (70")	0.872	1.550	—	—	—	1.04
2.03 (80")	0.996	1.771	—	—	—	1.20
2.29 (90")	1.121	1.992	—	—	—	1.36
2.54 (100")	1.245	2.214	—	—	—	1.51
3.05 (120")	1.494	2.657	0.97	–0.04	0.27 - 0.44	1.83
3.81 (150")	1.868	3.321	1.21	0.20	0.36 - 0.58	2.31
5.08 (200")	2.491	4.428	1.60	0.60	0.52 - 0.81	3.10
6.35 (250")	3.113	5.535	2.00	0.99	0.68 - 1.04	3.89
7.62 (300")	3.736	6.641	2.39	1.39	0.83 - 1.27	4.68
8.89 (350")	4.358	7.748	2.79	1.78	0.99 - 1.50	5.48
10.16 (400")	4.981	8.855	3.19	2.18	1.15 - 1.73	6.27
12.70 (500")	6.226	11.069	3.98	2.97	1.47 - 2.19	7.85
15.24 (600")	7.472	13.283	4.77	3.76	1.78 - 2.65	9.44
17.78 (700")	8.717	15.497	—	—	—	11.02
20.32 (800")	9.962	17.710	—	—	—	12.61
22.86 (900")	11.207	19.924	—	—	—	14.19
25.40 (1000")	12.453	22.138	—	—	—	15.78

*1 The throw ratio is based on the value during projection with the projected image size of 3.81 m (150").

*2 When the fixed-focus lens (Model No.: ET-D75LE90) is attached, the projection relation between the screen and the projector differs from that of other lenses. Refer to “For fixed-focus lens (Model No.: ET-D75LE90)” (➡ page 35) for details.

■ When the image aspect ratio is 4:3

(Unit: m)

Lens type			Zoom lens											
Projection lens Model No.			ET-D75LE6		ET-D75LE10		ET-D75LE20		ET-D75LE30		ET-D75LE40		ET-D75LE8	
Throw ratio*1			1.1-1.3:1		1.6-2.0:1		2.0-2.9:1		2.9-5.6:1		5.5-8.9:1		8.8-16.5:1	
Projected image size			Projection distance (L)											
Diagonal (SD)	Height (SH)	Width (SW)	Min. (LW)	Max. (LT)	Min. (LW)	Max. (LT)	Min. (LW)	Max. (LT)	Min. (LW)	Max. (LT)	Min. (LW)	Max. (LT)	Min. (LW)	Max. (LT)
1.78 (70")	1.067	1.422	1.54	1.84	2.17	2.80	2.80	4.07	4.04	7.88	7.80	12.52	12.25	23.32
2.03 (80")	1.219	1.626	1.77	2.11	2.49	3.22	3.21	4.67	4.64	9.03	8.94	14.34	14.06	26.71
2.29 (90")	1.372	1.829	2.00	2.38	2.81	3.63	3.62	5.27	5.23	10.19	10.07	16.15	15.87	30.09
2.54 (100")	1.524	2.032	2.22	2.66	3.13	4.05	4.03	5.86	5.82	11.34	11.21	17.96	17.67	33.47
3.05 (120")	1.829	2.438	2.68	3.20	3.77	4.88	4.86	7.06	7.01	13.64	13.48	21.59	21.28	40.24
3.81 (150")	2.286	3.048	3.36	4.02	4.74	6.13	6.09	8.85	8.79	17.09	16.89	27.02	26.70	50.39
5.08 (200")	3.048	4.064	4.50	5.39	6.35	8.21	8.15	11.84	11.76	22.85	22.58	36.09	35.73	67.31
6.35 (250")	3.810	5.080	5.64	6.76	7.96	10.28	10.20	14.83	14.73	28.61	28.26	45.15	44.76	84.23
7.62 (300")	4.572	6.096	6.78	8.12	9.56	12.36	12.26	17.82	17.70	34.36	33.94	54.21	53.79	101.14
8.89 (350")	5.334	7.112	7.92	9.49	11.17	14.44	14.32	20.81	20.67	40.12	39.63	63.27	62.82	118.06
10.16 (400")	6.096	8.128	9.06	10.85	12.78	16.52	16.38	23.80	23.63	45.88	45.31	72.33	71.85	134.98
12.70 (500")	7.620	10.160	11.34	13.58	16.00	20.68	20.49	29.78	29.57	57.39	56.68	90.45	89.91	168.81
15.24 (600")	9.144	12.192	13.62	16.32	19.21	24.83	24.61	35.76	35.51	68.91	68.05	108.58	107.96	202.65
17.78 (700")	10.668	14.224	15.90	19.05	22.43	28.99	28.72	41.74	41.45	80.42	79.41	126.70	126.02	—
20.32 (800")	12.192	16.256	18.18	21.78	25.65	33.15	32.84	47.72	47.38	91.93	90.78	144.82	144.08	—
22.86 (900")	13.716	18.288	20.46	24.51	28.86	37.31	36.95	53.70	53.32	103.45	102.15	162.95	162.14	—
25.40 (1000")	15.240	20.320	22.74	27.24	32.08	41.46	41.07	59.68	59.26	114.96	113.52	181.07	180.20	—

Lens type			Fixed-focus lens			
Projection lens Model No.			ET-D75LE90*2			ET-D75LE50
Throw ratio*1			0.44:1			0.8:1
Projected image size			Projection distance (L1)	Distance between projector and screen		Projection distance (L)
Diagonal (SD)	Height (SH)	Width (SW)		(L4)	(A1)	Fixed
1.78 (70")	1.067	1.422	—	—	—	1.15
2.03 (80")	1.219	1.626	—	—	—	1.33
2.29 (90")	1.372	1.829	—	—	—	1.50
2.54 (100")	1.524	2.032	—	—	—	1.67
3.05 (120")	1.829	2.438	1.07	0.06	0.30 - 0.40	2.02
3.81 (150")	2.286	3.048	1.33	0.32	0.41 - 0.53	2.55
5.08 (200")	3.048	4.064	1.76	0.76	0.58 - 0.75	3.42
6.35 (250")	3.810	5.080	2.20	1.19	0.76 - 0.96	4.29
7.62 (300")	4.572	6.096	2.64	1.63	0.93 - 1.18	5.17
8.89 (350")	5.334	7.112	3.07	2.06	1.11 - 1.40	6.04
10.16 (400")	6.096	8.128	3.51	2.50	1.28 - 1.61	6.91
12.70 (500")	7.620	10.160	4.38	3.37	1.63 - 2.04	8.66
15.24 (600")	9.144	12.192	5.25	4.24	1.98 - 2.47	10.40
17.78 (700")	10.668	14.224	—	—	—	12.15
20.32 (800")	12.192	16.256	—	—	—	13.90
22.86 (900")	13.716	18.288	—	—	—	15.64
25.40 (1000")	15.240	20.320	—	—	—	17.39

*1 The throw ratio is based on the value during projection with the projected image size of 3.81 m (150").
*2 When the fixed-focus lens (Model No.: ET-D75LE90) is attached, the projection relation between the screen and the projector differs from that of other lenses. Refer to “For fixed-focus lens (Model No.: ET-D75LE90)” (➡ page 35) for details.

For PT-DS20K2

■ When the image aspect ratio is 4:3

(Unit: m)

Lens type			Zoom lens											
Projection lens Model No.			ET-D75LE6		ET-D75LE10		ET-D75LE20		ET-D75LE30		ET-D75LE40		ET-D75LE8	
Throw ratio*1			1.0-1.2:1		1.4-1.8:1		1.8-2.6:1		2.6-5.1:1		5.0-8.0:1		7.9-15.0:1	
Projected image size			Projection distance (L)											
Diagonal (SD)	Height (SH)	Width (SW)	Min. (LW)	Max. (LT)	Min. (LW)	Max. (LT)	Min. (LW)	Max. (LT)	Min. (LW)	Max. (LT)	Min. (LW)	Max. (LT)	Min. (LW)	Max. (LT)
1.78 (70")	1.067	1.422	1.39	1.66	1.95	2.52	2.52	3.66	3.64	7.10	7.02	11.28	11.09	21.14
2.03 (80")	1.219	1.626	1.60	1.91	2.24	2.89	2.89	4.20	4.17	8.13	8.05	12.92	12.73	24.21
2.29 (90")	1.372	1.829	1.81	2.16	2.53	3.27	3.26	4.74	4.71	9.17	9.07	14.56	14.37	27.29
2.54 (100")	1.524	2.032	2.01	2.41	2.82	3.64	3.63	5.28	5.24	10.21	10.10	16.19	16.01	30.36
3.05 (120")	1.829	2.438	2.43	2.90	3.40	4.39	4.37	6.36	6.31	12.29	12.15	19.46	19.29	36.50
3.81 (150")	2.286	3.048	3.05	3.65	4.27	5.52	5.49	7.98	7.92	15.41	15.23	24.37	24.21	45.72
5.08 (200")	3.048	4.064	4.08	4.89	5.72	7.39	7.34	10.67	10.60	20.60	20.35	32.54	32.40	61.08
6.35 (250")	3.810	5.080	5.12	6.13	7.17	9.27	9.20	13.37	13.28	25.79	25.48	40.72	40.60	76.44
7.62 (300")	4.572	6.096	6.15	7.37	8.62	11.14	11.06	16.07	15.96	30.99	30.61	48.89	48.80	91.79
8.89 (350")	5.334	7.112	7.19	8.61	10.07	13.02	12.91	18.77	18.63	36.18	35.74	57.07	57.00	107.15
10.16 (400")	6.096	8.128	8.22	9.85	11.52	14.90	14.77	21.46	21.31	41.38	40.87	65.25	65.19	122.51
12.70 (500")	7.620	10.160	10.29	12.33	14.42	18.65	18.48	26.86	26.67	51.77	51.12	81.60	81.59	153.23
15.24 (600")	9.144	12.192	12.36	14.81	17.33	22.40	22.19	32.25	32.03	62.15	61.38	97.95	97.98	183.95
17.78 (700")	10.668	14.224	14.43	17.29	20.23	26.15	25.91	37.65	37.38	72.54	71.64	114.30	114.38	—
20.32 (800")	12.192	16.256	16.50	19.77	23.13	29.90	29.62	43.04	42.74	82.93	81.89	130.65	130.77	—
22.86 (900")	13.716	18.288	18.57	22.25	26.03	33.65	33.33	48.44	48.10	93.32	92.15	147.00	147.17	—
25.40 (1000")	15.240	20.320	20.64	24.73	28.93	37.40	37.05	53.83	53.45	103.71	102.41	163.36	163.56	—

Lens type			Fixed-focus lens			
Projection lens Model No.			ET-D75LE90*2			ET-D75LE50
Throw ratio*1			0.39:1			0.8:1
Projected image size			Projection distance (L1)	Distance between projector and screen		Projection distance (L)
Diagonal (SD)	Height (SH)	Width (SW)		(L4)	(A1)	Fixed
1.78 (70")	1.067	1.422	—	—	—	1.03
2.03 (80")	1.219	1.626	—	—	—	1.19
2.29 (90")	1.372	1.829	—	—	—	1.35
2.54 (100")	1.524	2.032	—	—	—	1.50
3.05 (120")	1.829	2.438	0.96	–0.04	0.26	1.82
3.81 (150")	2.286	3.048	1.20	0.19	0.36	2.29
5.08 (200")	3.048	4.064	1.59	0.59	0.51	3.08
6.35 (250")	3.810	5.080	1.99	0.98	0.67	3.87
7.62 (300")	4.572	6.096	2.38	1.37	0.83	4.65
8.89 (350")	5.334	7.112	2.77	1.77	0.98	5.44
10.16 (400")	6.096	8.128	3.17	2.16	1.14	6.23
12.70 (500")	7.620	10.160	3.95	2.95	1.46	7.80
15.24 (600")	9.144	12.192	4.74	3.73	1.77	9.38
17.78 (700")	10.668	14.224	—	—	—	10.96
20.32 (800")	12.192	16.256	—	—	—	12.53
22.86 (900")	13.716	18.288	—	—	—	14.11
25.40 (1000")	15.240	20.320	—	—	—	15.68

*1 The throw ratio is based on the value during projection with the projected image size of 3.81 m (150").
*2 When the fixed-focus lens (Model No.: ET-D75LE90) is attached, the projection relation between the screen and the projector differs from that of other lenses. Refer to “For fixed-focus lens (Model No.: ET-D75LE90)” (➡ page 35) for details.

■ When the image aspect ratio is 16:9

(Unit: m)

Lens type			Zoom lens											
Projection lens Model No.			ET-D75LE6		ET-D75LE10		ET-D75LE20		ET-D75LE30		ET-D75LE40		ET-D75LE8	
Throw ratio*1			1.0-1.2:1		1.4-1.8:1		1.8-2.6:1		2.6-5.1:1		5.0-8.0:1		8.0-15.0:1	
Projected image size			Projection distance (L)											
Diagonal (SD)	Height (SH)	Width (SW)	Min. (LW)	Max. (LT)	Min. (LW)	Max. (LT)	Min. (LW)	Max. (LT)	Min. (LW)	Max. (LT)	Min. (LW)	Max. (LT)	Min. (LW)	Max. (LT)
1.78 (70")	0.872	1.550	1.52	1.82	2.13	2.75	2.75	4.00	3.97	7.74	7.66	12.31	12.12	23.06
2.03 (80")	0.996	1.771	1.75	2.09	2.44	3.16	3.15	4.59	4.55	8.88	8.78	14.09	13.90	26.41
2.29 (90")	1.121	1.992	1.97	2.36	2.76	3.57	3.56	5.17	5.14	10.01	9.90	15.87	15.69	29.76
2.54 (100")	1.245	2.214	2.20	2.63	3.08	3.98	3.96	5.76	5.72	11.14	11.01	17.65	17.47	33.10
3.05 (120")	1.494	2.657	2.65	3.17	3.71	4.79	4.77	6.94	6.89	13.40	13.25	21.21	21.04	39.79
3.81 (150")	1.868	3.321	3.33	3.98	4.66	6.02	5.98	8.70	8.64	16.80	16.60	26.56	26.40	49.83
5.08 (200")	2.491	4.428	4.45	5.33	6.24	8.06	8.01	11.64	11.56	22.46	22.19	35.46	35.33	66.56
6.35 (250")	3.113	5.535	5.58	6.68	7.82	10.11	10.03	14.58	14.47	28.11	27.77	44.37	44.26	83.29
7.62 (300")	3.736	6.641	6.71	8.03	9.40	12.15	12.05	17.51	17.39	33.77	33.36	53.27	53.19	100.02
8.89 (350")	4.358	7.748	7.84	9.38	10.98	14.19	14.07	20.45	20.31	39.43	38.95	62.18	62.12	116.75
10.16 (400")	4.981	8.855	8.96	10.73	12.56	16.23	16.10	23.39	23.23	45.09	44.53	71.09	71.05	133.48
12.70 (500")	6.226	11.069	11.22	13.43	15.72	20.32	20.14	29.27	29.06	56.40	55.70	88.90	88.91	166.95
15.24 (600")	7.472	13.283	13.47	16.14	18.88	24.41	24.18	35.15	34.90	67.72	66.88	106.71	106.77	200.41
17.78 (700")	8.717	15.497	15.73	18.84	22.04	28.49	28.23	41.02	40.73	79.04	78.05	124.52	124.63	—
20.32 (800")	9.962	17.710	17.98	21.54	25.20	32.58	32.27	46.90	46.57	90.35	89.22	142.34	142.49	—
22.86 (900")	11.207	19.924	20.24	24.24	28.36	36.66	36.32	52.78	52.40	101.67	100.39	160.15	160.35	—
25.40 (1000")	12.453	22.138	22.49	26.94	31.53	40.75	40.36	58.65	58.24	112.98	111.56	177.96	178.20	—

Lens type			Fixed-focus lens			
Projection lens Model No.			ET-D75LE90*2			ET-D75LE50
Throw ratio*1			0.39:1			0.8:1
Projected image size			Projection distance (L1)	Distance between projector and screen		Projection distance (L)
Diagonal (SD)	Height (SH)	Width (SW)		(L4)	(A1)	Fixed
1.78 (70")	0.872	1.550	—	—	—	1.13
2.03 (80")	0.996	1.771	—	—	—	1.30
2.29 (90")	1.121	1.992	—	—	—	1.47
2.54 (100")	1.245	2.214	—	—	—	1.64
3.05 (120")	1.494	2.657	1.05	0.04	0.30 - 0.54	1.99
3.81 (150")	1.868	3.321	1.31	0.30	0.40 - 0.71	2.50
5.08 (200")	2.491	4.428	1.73	0.73	0.57 - 0.98	3.36
6.35 (250")	3.113	5.535	2.16	1.15	0.74 - 1.26	4.22
7.62 (300")	3.736	6.641	2.59	1.58	0.91 - 1.53	5.08
8.89 (350")	4.358	7.748	3.02	2.01	1.08 - 1.81	5.93
10.16 (400")	4.981	8.855	3.45	2.44	1.26 - 2.08	6.79
12.70 (500")	6.226	11.069	4.30	3.30	1.60 - 2.63	8.51
15.24 (600")	7.472	13.283	5.16	4.15	1.94 - 3.18	10.22
17.78 (700")	8.717	15.497	—	—	—	11.94
20.32 (800")	9.962	17.710	—	—	—	13.66
22.86 (900")	11.207	19.924	—	—	—	15.37
25.40 (1000")	12.453	22.138	—	—	—	17.09

*1 The throw ratio is based on the value during projection with the projected image size of 3.81 m (150").
*2 When the fixed-focus lens (Model No.: ET-D75LE90) is attached, the projection relation between the screen and the projector differs from that of other lenses. Refer to “For fixed-focus lens (Model No.: ET-D75LE90)” (➡ page 35) for details.

For PT-DW17K2

■ When the image aspect ratio is 16:9

(Unit: m)

Lens type			Zoom lens											
Projection lens Model No.			ET-D75LE6		ET-D75LE10		ET-D75LE20		ET-D75LE30		ET-D75LE40		ET-D75LE8	
Throw ratio*1			1.0-1.2:1		1.4-1.9:1		1.8-2.7:1		2.7-5.2:1		5.1-8.2:1		8.2-15.4:1	
Projected image size			Projection distance (L)											
Diagonal (SD)	Height (SH)	Width (SW)	Min. (LW)	Max. (LT)	Min. (LW)	Max. (LT)	Min. (LW)	Max. (LT)	Min. (LW)	Max. (LT)	Min. (LW)	Max. (LT)	Min. (LW)	Max. (LT)
1.78 (70")	0.872	1.550	1.56	1.87	2.18	2.82	2.82	4.10	4.07	7.94	7.86	12.62	12.43	23.65
2.03 (80")	0.996	1.771	1.79	2.14	2.51	3.24	3.23	4.70	4.67	9.10	9.01	14.45	14.26	27.08
2.29 (90")	1.121	1.992	2.02	2.42	2.83	3.66	3.65	5.31	5.27	10.26	10.15	16.27	16.09	30.51
2.54 (100")	1.245	2.214	2.25	2.70	3.15	4.08	4.06	5.91	5.87	11.42	11.30	18.10	17.92	33.94
3.05 (120")	1.494	2.657	2.72	3.25	3.80	4.92	4.89	7.11	7.07	13.74	13.59	21.75	21.58	40.80
3.81 (150")	1.868	3.321	3.41	4.08	4.78	6.17	6.14	8.92	8.86	17.22	17.02	27.23	27.08	51.09
5.08 (200")	2.491	4.428	4.56	5.47	6.40	8.27	8.21	11.93	11.85	23.03	22.75	36.36	36.23	68.25
6.35 (250")	3.113	5.535	5.72	6.85	8.02	10.36	10.28	14.95	14.84	28.83	28.48	45.49	45.39	85.40
7.62 (300")	3.736	6.641	6.87	8.24	9.64	12.46	12.36	17.96	17.83	34.63	34.20	54.62	54.54	102.55
8.89 (350")	4.358	7.748	8.03	9.62	11.26	14.55	14.43	20.97	20.82	40.43	39.93	63.75	63.70	119.70
10.16 (400")	4.981	8.855	9.18	11.01	12.88	16.65	16.50	23.98	23.81	46.23	45.66	72.88	72.85	136.85
12.70 (500")	6.226	11.069	11.49	13.78	16.12	20.83	20.65	30.01	29.80	57.83	57.11	91.14	91.16	171.16
15.24 (600")	7.472	13.283	13.80	16.55	19.36	25.02	24.80	36.03	35.78	69.43	68.56	109.40	109.47	205.46
17.78 (700")	8.717	15.497	16.11	19.32	22.60	29.21	28.94	42.06	41.76	81.03	80.02	127.66	127.78	—
20.32 (800")	9.962	17.710	18.42	22.09	25.84	33.40	33.09	48.08	47.74	92.63	91.47	145.92	146.09	—
22.86 (900")	11.207	19.924	20.73	24.86	29.08	37.59	37.23	54.11	53.72	104.23	102.92	164.18	164.39	—
25.40 (1000")	12.453	22.138	23.04	27.63	32.32	41.78	41.38	60.13	59.70	115.83	114.38	182.44	182.70	—

Lens type			Fixed-focus lens			
Projection lens Model No.			ET-D75LE90*2			ET-D75LE50
Throw ratio*1			0.40:1			0.8:1
Projected image size			Projection distance (L1)	Distance between projector and screen		Projection distance (L)
Diagonal (SD)	Height (SH)	Width (SW)		(L4)	(A1)	Fixed
1.78 (70")	0.872	1.550	—	—	—	1.16
2.03 (80")	0.996	1.771	—	—	—	1.34
2.29 (90")	1.121	1.992	—	—	—	1.51
2.54 (100")	1.245	2.214	—	—	—	1.69
3.05 (120")	1.494	2.657	1.07	0.07	0.31 - 0.58	2.04
3.81 (150")	1.868	3.321	1.34	0.33	0.41 - 0.76	2.57
5.08 (200")	2.491	4.428	1.78	0.77	0.59 - 1.05	3.45
6.35 (250")	3.113	5.535	2.22	1.21	0.76 - 1.34	4.33
7.62 (300")	3.736	6.641	2.65	1.65	0.94 - 1.63	5.21
8.89 (350")	4.358	7.748	3.09	2.09	1.12 - 1.92	6.09
10.16 (400")	4.981	8.855	3.53	2.53	1.29 - 2.21	6.96
12.70 (500")	6.226	11.069	4.41	3.40	1.64 - 2.79	8.72
15.24 (600")	7.472	13.283	5.29	4.28	1.99 - 3.37	10.48
17.78 (700")	8.717	15.497	—	—	—	12.24
20.32 (800")	9.962	17.710	—	—	—	14.00
22.86 (900")	11.207	19.924	—	—	—	15.76
25.40 (1000")	12.453	22.138	—	—	—	17.52

*1 The throw ratio is based on the value during projection with the projected image size of 3.81 m (150").

*2 When the fixed-focus lens (Model No.: ET-D75LE90) is attached, the projection relation between the screen and the projector differs from that of other lenses. Refer to “For fixed-focus lens (Model No.: ET-D75LE90)” (➡ page 35) for details.

■ When the image aspect ratio is 4:3

(Unit: m)

Lens type			Zoom lens											
Projection lens Model No.			ET-D75LE6		ET-D75LE10		ET-D75LE20		ET-D75LE30		ET-D75LE40		ET-D75LE8	
Throw ratio*1			1.4-1.6:1		1.9-2.5:1		2.5-3.6:1		3.6-6.9:1		6.8-10.9:1		10.9-20.5:1	
Projected image size			Projection distance (L)											
Diagonal (SD)	Height (SH)	Width (SW)	Min. (LW)	Max. (LT)	Min. (LW)	Max. (LT)	Min. (LW)	Max. (LT)	Min. (LW)	Max. (LT)	Min. (LW)	Max. (LT)	Min. (LW)	Max. (LT)
1.78 (70")	1.067	1.422	1.92	2.30	2.69	3.48	3.47	5.05	5.01	9.77	9.66	15.49	15.30	29.04
2.03 (80")	1.219	1.626	2.21	2.64	3.09	3.99	3.98	5.78	5.75	11.19	11.06	17.72	17.55	33.24
2.29 (90")	1.372	1.829	2.49	2.98	3.49	4.51	4.49	6.52	6.48	12.61	12.46	19.96	19.79	37.44
2.54 (100")	1.524	2.032	2.77	3.32	3.88	5.02	4.99	7.26	7.21	14.03	13.86	22.19	22.03	41.64
3.05 (120")	1.829	2.438	3.34	4.00	4.68	6.05	6.01	8.74	8.68	16.87	16.67	26.67	26.51	50.04
3.81 (150")	2.286	3.048	4.19	5.01	5.87	7.58	7.53	10.95	10.87	21.13	20.88	33.37	33.24	62.64
5.08 (200")	3.048	4.064	5.60	6.71	7.85	10.15	10.07	14.64	14.53	28.23	27.89	44.55	44.44	83.63
6.35 (250")	3.810	5.080	7.01	8.40	9.83	12.71	12.61	18.32	18.20	35.33	34.90	55.73	55.65	104.63
7.62 (300")	4.572	6.096	8.43	10.10	11.82	15.28	15.15	22.01	21.86	42.43	41.91	66.91	66.86	125.63
8.89 (350")	5.334	7.112	9.84	11.80	13.80	17.84	17.68	25.70	25.52	49.53	48.92	78.08	78.07	146.63
10.16 (400")	6.096	8.128	11.26	13.49	15.78	20.40	20.22	29.39	29.18	56.64	55.93	89.26	89.28	167.63
12.70 (500")	7.620	10.160	14.08	16.88	19.75	25.53	25.30	36.76	36.50	70.84	69.95	111.62	111.69	209.62
15.24 (600")	9.144	12.192	16.91	20.27	23.72	30.66	30.38	44.14	43.83	85.04	83.98	133.97	134.11	251.62
17.78 (700")	10.668	14.224	19.74	23.67	27.69	35.79	35.45	51.52	51.15	99.24	98.00	156.33	156.52	—
20.32 (800")	12.192	16.256	22.57	27.06	31.65	40.92	40.53	58.89	58.47	113.45	112.02	178.69	178.94	—
22.86 (900")	13.716	18.288	25.40	30.45	35.62	46.05	45.60	66.27	65.80	127.65	126.04	201.04	201.35	—
25.40 (1000")	15.240	20.320	28.22	33.84	39.59	51.17	50.68	73.64	73.12	141.85	140.07	223.40	223.77	—

Lens type			Fixed-focus lens			
Projection lens Model No.			ET-D75LE90*2			ET-D75LE50
Throw ratio*1			0.54:1			1.0:1
Projected image size			Projection distance (L1)	Distance between projector and screen		Projection distance (L)
Diagonal (SD)	Height (SH)	Width (SW)		(L4)	(A1)	Fixed
1.78 (70")	1.067	1.422	—	—	—	1.44
2.03 (80")	1.219	1.626	—	—	—	1.65
2.29 (90")	1.372	1.829	—	—	—	1.87
2.54 (100")	1.524	2.032	—	—	—	2.08
3.05 (120")	1.829	2.438	1.31	0.30	0.40 - 0.74	2.51
3.81 (150")	2.286	3.048	1.63	0.63	0.53 - 0.95	3.16
5.08 (200")	3.048	4.064	2.17	1.16	0.75 - 1.31	4.24
6.35 (250")	3.810	5.080	2.71	1.70	0.96 - 1.66	5.31
7.62 (300")	4.572	6.096	3.25	2.24	1.18 - 2.02	6.39
8.89 (350")	5.334	7.112	3.78	2.78	1.39 - 2.37	7.47
10.16 (400")	6.096	8.128	4.32	3.31	1.61 - 2.73	8.54
12.70 (500")	7.620	10.160	5.40	4.39	2.03 - 3.44	10.70
15.24 (600")	9.144	12.192	6.47	5.46	2.46 - 4.15	12.85
17.78 (700")	10.668	14.224	—	—	—	15.00
20.32 (800")	12.192	16.256	—	—	—	17.16
22.86 (900")	13.716	18.288	—	—	—	19.31
25.40 (1000")	15.240	20.320	—	—	—	21.46

*1 The throw ratio is based on the value during projection with the projected image size of 3.81 m (150").
*2 When the fixed-focus lens (Model No.: ET-D75LE90) is attached, the projection relation between the screen and the projector differs from that of other lenses. Refer to “For fixed-focus lens (Model No.: ET-D75LE90)” (➡ page 35) for details.

For PT-DZ16K2

■ When the image aspect ratio is 16:9

(Unit: m)

Lens type			Zoom lens											
Projection lens Model No.			ET-D75LE6		ET-D75LE10		ET-D75LE20		ET-D75LE30		ET-D75LE40		ET-D75LE8	
Throw ratio*1			0.9-1.1:1		1.3-1.7:1		1.7-2.4:1		2.4-4.7:1		4.6-7.4:1		7.3-13.8:1	
Projected image size			Projection distance (L)											
Diagonal (SD)	Height (SH)	Width (SW)	Min. (LW)	Max. (LT)	Min. (LW)	Max. (LT)	Min. (LW)	Max. (LT)	Min. (LW)	Max. (LT)	Min. (LW)	Max. (LT)	Min. (LW)	Max. (LT)
1.78 (70")	0.872	1.550	1.40	1.67	1.96	2.53	2.53	3.68	3.66	7.14	7.07	11.36	11.16	21.28
2.03 (80")	0.996	1.771	1.61	1.92	2.25	2.91	2.91	4.23	4.20	8.19	8.10	13.00	12.81	24.37
2.29 (90")	1.121	1.992	1.82	2.17	2.54	3.29	3.28	4.77	4.74	9.23	9.13	14.65	14.46	27.46
2.54 (100")	1.245	2.214	2.03	2.42	2.83	3.67	3.65	5.31	5.28	10.28	10.16	16.29	16.11	30.55
3.05 (120")	1.494	2.657	2.44	2.92	3.42	4.42	4.40	6.40	6.35	12.37	12.23	19.58	19.41	36.73
3.81 (150")	1.868	3.321	3.07	3.67	4.29	5.55	5.52	8.03	7.97	15.50	15.32	24.52	24.36	46.00
5.08 (200")	2.491	4.428	4.11	4.92	5.75	7.44	7.39	10.74	10.67	20.73	20.48	32.75	32.61	61.46
6.35 (250")	3.113	5.535	5.15	6.17	7.21	9.33	9.26	13.46	13.36	25.96	25.64	40.97	40.86	76.91
7.62 (300")	3.736	6.641	6.19	7.41	8.67	11.21	11.13	16.17	16.06	31.18	30.80	49.20	49.11	92.37
8.89 (350")	4.358	7.748	7.23	8.66	10.13	13.10	12.99	18.88	18.75	36.41	35.96	57.43	57.35	107.82
10.16 (400")	4.981	8.855	8.28	9.91	11.59	14.99	14.86	21.60	21.45	41.64	41.12	65.65	65.60	123.28
12.70 (500")	6.226	11.069	10.36	12.40	14.51	18.76	18.60	27.03	26.84	52.09	51.44	82.11	82.10	154.19
15.24 (600")	7.472	13.283	12.44	14.90	17.44	22.54	22.33	32.46	32.23	62.54	61.76	98.56	98.60	185.10
25.40 (1000")	12.453	22.138	20.77	24.88	29.12	37.63	37.28	54.17	53.79	104.36	103.05	164.38	164.59	—

Lens type			Fixed-focus lens			
Projection lens Model No.			ET-D75LE90*2			ET-D75LE50
Throw ratio*1			0.36:1			0.7:1
Projected image size			Projection distance (L1)	Distance between projector and screen		Projection distance (L)
Diagonal (SD)	Height (SH)	Width (SW)		(L4)	(A1)	Fixed
1.78 (70")	0.872	1.550	—	—	—	1.04
2.03 (80")	0.996	1.771	—	—	—	1.20
2.29 (90")	1.121	1.992	—	—	—	1.36
2.54 (100")	1.245	2.214	—	—	—	1.51
3.05 (120")	1.494	2.657	0.97	-0.04	0.27 - 0.44	1.83
3.81 (150")	1.868	3.321	1.21	0.20	0.36 - 0.58	2.31
5.08 (200")	2.491	4.428	1.60	0.60	0.52 - 0.81	3.10
6.35 (250")	3.113	5.535	2.00	0.99	0.68 - 1.04	3.89
7.62 (300")	3.736	6.641	2.39	1.39	0.83 - 1.27	4.68
8.89 (350")	4.358	7.748	2.79	1.78	0.99 - 1.50	5.48
10.16 (400")	4.981	8.855	3.19	2.18	1.15 - 1.73	6.27
12.70 (500")	6.226	11.069	3.98	2.97	1.47 - 2.19	7.85
15.24 (600")	7.472	13.283	4.77	3.76	1.78 - 2.65	9.44
25.40 (1000")	12.453	22.138	—	—	—	15.78

*1 The throw ratio is based on the value during projection with the projected image size of 3.81 m (150").
*2 When the fixed-focus lens (Model No.: ET-D75LE90) is attached, the projection relation between the screen and the projector differs from that of other lenses. Refer to “For fixed-focus lens (Model No.: ET-D75LE90)” (➡ page 35) for details.

■ When the image aspect ratio is 4:3

(Unit: m)

Lens type			Zoom lens											
Projection lens Model No.			ET-D75LE6		ET-D75LE10		ET-D75LE20		ET-D75LE30		ET-D75LE40		ET-D75LE8	
Throw ratio*1			1.2-1.5:1		1.7-2.2:1		2.2-3.2:1		3.2-6.2:1		6.2-9.9:1		9.8-18.5:1	
Projected image size			Projection distance (L)											
Diagonal (SD)	Height (SH)	Width (SW)	Min. (LW)	Max. (LT)	Min. (LW)	Max. (LT)	Min. (LW)	Max. (LT)	Min. (LW)	Max. (LT)	Min. (LW)	Max. (LT)	Min. (LW)	Max. (LT)
1.78 (70")	1.067	1.422	1.73	2.06	2.42	3.12	3.12	4.53	4.50	8.78	8.68	13.93	13.75	26.12
2.03 (80")	1.219	1.626	1.98	2.37	2.77	3.59	3.57	5.20	5.16	10.06	9.95	15.95	15.77	29.90
2.29 (90")	1.372	1.829	2.24	2.68	3.13	4.05	4.03	5.86	5.82	11.34	11.21	17.96	17.78	33.69
2.54 (100")	1.524	2.032	2.49	2.98	3.49	4.51	4.49	6.53	6.48	12.62	12.47	19.98	19.80	37.47
3.05 (120")	1.829	2.438	3.00	3.59	4.20	5.43	5.40	7.86	7.80	15.18	15.00	24.00	23.84	45.03
3.81 (150")	2.286	3.048	3.77	4.51	5.27	6.82	6.78	9.85	9.78	19.01	18.79	30.04	29.90	56.38
5.08 (200")	3.048	4.064	5.04	6.03	7.06	9.13	9.06	13.17	13.08	25.41	25.10	40.11	39.99	75.30
6.35 (250")	3.810	5.080	6.32	7.56	8.85	11.44	11.35	16.49	16.38	31.81	31.42	50.18	50.09	94.21
7.62 (300")	4.572	6.096	7.59	9.09	10.64	13.75	13.63	19.82	19.68	38.20	37.73	60.25	60.18	113.13
8.89 (350")	5.334	7.112	8.87	10.62	12.42	16.06	15.92	23.14	22.97	44.60	44.05	70.32	70.28	132.04
10.16 (400")	6.096	8.128	10.14	12.14	14.21	18.37	18.21	26.46	26.27	51.00	50.36	80.39	80.37	150.95
12.70 (500")	7.620	10.16	12.69	15.20	17.78	22.99	22.78	33.10	32.87	63.79	62.99	100.52	100.56	188.78
15.24 (600")	9.144	12.192	15.24	18.25	21.36	27.61	27.35	39.75	39.47	76.58	75.62	120.66	120.75	226.61
25.40 (1000")	15.240	20.320	25.44	30.47	35.65	46.08	45.64	66.32	65.85	127.75	126.15	201.21	201.52	—

Lens type			Fixed-focus lens			
Projection lens Model No.			ET-D75LE90*2			ET-D75LE50
Throw ratio*1			0.48:1			0.9:1
Projection screen size			Projection distance (L1)	Distance between projector and screen		Projection distance (L)
Diagonal (SD)	Height (SH)	Width (SW)		(L4)	(A1)	Fixed
1.78 (70")	1.067	1.422	—	—	—	1.29
2.03 (80")	1.219	1.626	—	—	—	1.48
2.29 (90")	1.372	1.829	—	—	—	1.67
2.54 (100")	1.524	2.032	—	—	—	1.87
3.05 (120")	1.829	2.438	1.18	0.17	0.35 - 0.56	2.26
3.81 (150")	2.286	3.048	1.47	0.47	0.47 - 0.73	2.84
5.08 (200")	3.048	4.064	1.96	0.95	0.66 - 1.01	3.81
6.35 (250")	3.810	5.080	2.44	1.43	0.85 - 1.30	4.78
7.62 (300")	4.572	6.096	2.93	1.92	1.05 - 1.58	5.75
8.89 (350")	5.334	7.112	3.41	2.40	1.24 - 1.86	6.72
10.16 (400")	6.096	8.128	3.89	2.89	1.43 - 2.14	7.69
12.70 (500")	7.620	10.160	4.86	3.86	1.82 - 2.71	9.63
15.24 (600")	9.144	12.192	5.83	4.82	2.21 - 3.27	11.57
25.40 (1000")	15.240	20.320	—	—	—	19.33

*1 The throw ratio is based on the value during projection with the projected image size of 3.81 m (150").
*2 When the fixed-focus lens (Model No.: ET-D75LE90) is attached, the projection relation between the screen and the projector differs from that of other lenses. Refer to “For fixed-focus lens (Model No.: ET-D75LE90)” (➡ page 35) for details.

Formula for calculating the projection distance per projection lens

To use a projected image size not listed in this manual, check the projected image size SD (m) and use the respective formula to calculate projection distance.
The unit of all the formulae is m. (Values obtained by the following calculation formulae contain a slight error.)
When calculating a projection distance using image size designation (value in inches), multiply the value in inches by 0.0254 and substitute it into SD in the formula for calculating the projection distance.

For PT-DZ21K2

■ Zoom lens

Projection lens Model No.	Throw ratio	Aspect ratio	Projection distance (L) formula	
			Min. (LW)	Max. (LT)
ET-D75LE6	0.9 - 1.1:1	16:10	= 0.8150 x SD – 0.0566	= 0.9764 x SD – 0.0736
	0.9 - 1.1:1	16:9	= 0.8858 x SD – 0.0566	= 1.0630 x SD – 0.0736
	1.1 - 1.3:1	4:3	= 0.7913 x SD – 0.0566	= 0.9488 x SD – 0.0736
ET-D75LE10	1.3 - 1.7:1	16:10	= 1.1186 x SD – 0.0857	= 1.4458 x SD – 0.1085
	1.3 - 1.7:1	16:9	= 1.1497 x SD – 0.0857	= 1.4860 x SD – 0.1085
	1.6 - 2.0:1	4:3	= 1.2663 x SD – 0.0857	= 1.6367 x SD – 0.1085
ET-D75LE20	1.7 - 2.4:1	16:10	= 1.4312 x SD – 0.0832	= 2.0795 x SD – 0.1162
	1.7 - 2.4:1	16:9	= 1.4709 x SD – 0.0832	= 2.1373 x SD – 0.1162
	2.0 - 2.9:1	4:3	= 1.6202 x SD – 0.0832	= 2.3542 x SD – 0.1162
ET-D75LE30	2.4 - 4.7:1	16:10	= 2.0647 x SD – 0.1131	= 4.0041 x SD – 0.1765
	2.4 - 4.7:1	16:9	= 2.1221 x SD – 0.1131	= 4.1155 x SD – 0.1765
	2.9 - 5.6:1	4:3	= 2.3374 x SD – 0.1131	= 4.5330 x SD – 0.1765
ET-D75LE40	4.6 - 7.4:1	16:10	= 3.9532 x SD – 0.1577	= 6.3027 x SD – 0.1615
	4.6 - 7.4:1	16:9	= 4.0631 x SD – 0.1577	= 6.4779 x SD – 0.1615
	5.5 - 8.9:1	4:3	= 4.4754 x SD – 0.1577	= 7.1351 x SD – 0.1615
ET-D75LE8	7.3 - 13.8:1	16:10	= 6.4567 x SD – 0.3862	= 12.0945 x SD – 0.3598
	7.3 - 13.8:1	16:9	= 7.0315 x SD – 0.3862	= 13.1732 x SD – 0.3598
	8.8 - 16.5:1	4:3	= 6.2795 x SD – 0.3862	= 11.7677 x SD – 0.3598

■ Fixed-focus lens

Projection lens Model No.	Throw ratio	Aspect ratio	Projection distance (L1) formula	Formula for distance between projector and screen (A1)	
				Min.	Max.
ET-D75LE90	0.36:1	16:10	= 0.303 x SD + 0.020	= 0.229 x SH – 0.114	= 0.283 x SH – 0.114
	0.36:1	16:9	= 0.312 x SD + 0.020	= 0.254 x SH – 0.114	= 0.370 x SH – 0.114
	0.44:1	4:3	= 0.343 x SD + 0.020	= 0.229 x SH – 0.114	= 0.283 x SH – 0.114

Projection lens Model No.	Throw ratio	Aspect ratio	Projection distance (L) formula
ET-D75LE50	0.7:1	16:10	= 0.6072 x SD – 0.0713
	0.7:1	16:9	= 0.6240 x SD – 0.0713
	0.8:1	4:3	= 0.6873 x SD – 0.0713

For PT-DS20K2

■ Zoom lens

Projection lens Model No.	Throw ratio	Aspect ratio	Projection distance (L) formula	
			Min. (LW)	Max. (LT)
ET-D75LE6	1.0 - 1.2:1	4:3	= 0.8150 x SD – 0.0566	= 0.9764 x SD – 0.0736
	1.0 - 1.2:1	16:9	= 0.8976 x SD – 0.0566	= 1.0748 x SD – 0.0736
ET-D75LE10	1.4 - 1.8:1	4:3	=1.1425 x SD – 0.0857	= 1.4767 x SD – 0.1085
	1.4 - 1.8:1	16:9	= 1.2446 x SD – 0.0857	= 1.6086 x SD – 0.1085
ET-D75LE20	1.8 - 2.6:1	4:3	= 1.4618 x SD – 0.0832	= 2.1241 x SD – 0.1162
	1.8 - 2.6:1	16:9	= 1.5924 x SD – 0.0832	= 2.3137 x SD – 0.1162

Projection lens Model No.	Throw ratio	Aspect ratio	Projection distance (L) formula	
			Min. (LW)	Max. (LT)
ET-D75LE30	2.6 - 5.1:1	4:3	= 2.1089 x SD – 0.1131	= 4.0899 x SD – 0.1765
	2.6 - 5.1:1	16:9	= 2.2972 x SD – 0.1131	= 4.4552 x SD – 0.1765
ET-D75LE40	5.0 - 8.0:1	4:3	= 4.0379 x SD – 0.1577	= 6.4377 x SD – 0.1615
	5.0 - 8.0:1	16:9	= 4.3985 x SD – 0.1577	= 7.0126 x SD – 0.1615
ET-D75LE8	7.9 - 15.0:1	4:3	= 6.4567 x SD – 0.3862	= 12.0945 x SD – 0.3598
	8.0 - 15.0:1	16:9	= 7.1102 x SD – 0.3862	= 13.3189 x SD – 0.3598

■ Fixed-focus lens

Projection lens Model No.	Throw ratio	Aspect ratio	Projection distance (L1) formula	Formula for distance between projector and screen (A1)	
				Min.	Max.
ET-D75LE90	0.39:1	4:3	= 0.310 x SD + 0.020	= 0.206 x SH – 0.114	
	0.39:1	16:9	= 0.337 x SD + 0.020	= 0.275 x SH – 0.114	= 0.441 x SH – 0.114

Projection lens Model No.	Throw ratio	Aspect ratio	Projection distance (L) formula
ET-D75LE50	0.8:1	4:3	= 0.6202 x SD – 0.0713
	0.8:1	16:9	= 0.6755 x SD – 0.0713

For PT-DW17K2

■ Zoom lens

Projection lens Model No.	Throw ratio	Aspect ratio	Projection distance (L) formula	
			Min. (LW)	Max. (LT)
ET-D75LE6	1.0 - 1.2:1	16:9	= 0.9094 x SD – 0.0566	= 1.0906 x SD – 0.0736
	1.4 - 1.6:1	4:3	= 1.1142 x SD – 0.0566	= 1.3346 x SD – 0.0736
ET-D75LE10	1.4 - 1.9:1	16:9	= 1.2759 x SD – 0.0857	= 1.6491 x SD – 0.1085
	1.9 - 2.5:1	4:3	= 1.5620 x SD – 0.0857	= 2.0190 x SD – 0.1085
ET-D75LE20	1.8 - 2.7:1	16:9	= 1.6324 x SD – 0.0832	= 2.3720 x SD – 0.1162
	2.5 - 3.6:1	4:3	= 1.9986 x SD – 0.0832	= 2.9040 x SD – 0.1162
ET-D75LE30	2.7 - 5.2:1	16:9	= 2.3550 x SD – 0.1131	= 4.5673 x SD – 0.1765
	3.6 - 6.9:1	4:3	= 2.8833 x SD – 0.1131	= 5.5917 x SD – 0.1765
ET-D75LE40	5.1 - 8.2:1	16:9	= 4.5092 x SD – 0.1577	= 7.1891 x SD – 0.1615
	6.8 - 10.9:1	4:3	= 5.5206 x SD – 0.1577	= 8.8016 x SD – 0.1615
ET-D75LE8	8.2 - 15.4:1	16:9	= 7.2087 x SD – 0.3862	= 13.5039 x SD – 0.3598
	10.9 - 20.5:1	4:3	= 8.8228 x SD – 0.3862	= 16.5354 x SD – 0.3598

■ Fixed-focus lens

Projection lens Model No.	Throw ratio	Aspect ratio	Projection distance (L1) formula	Formula for distance between projector and screen (A1)	
				Min.	Max.
ET-D75LE90	0.40:1	16:9	= 0.346 x SD + 0.020	= 0.282 x SH – 0.114	= 0.466 x SH – 0.114
	0.54:1	4:3	= 0.423 x SD + 0.020		

Projection lens Model No.	Throw ratio	Aspect ratio	Projection distance (L) formula
ET-D75LE50	0.8:1	16:9	= 0.6925 x SD – 0.0713
	1.0:1	4:3	= 0.8479 x SD – 0.0713

For PT-DZ16K2

■ Zoom lens

Projection lens Model No.	Throw ratio	Aspect ratio	Projection distance (L) formula	
			Min. (LW)	Max. (LT)
ET-D75LE6	0.9 - 1.1:1	16:9	= 0.8201 x SD – 0.0566	= 0.9825 x SD – 0.0736
	1.2 - 1.5:1	4:3	= 1.0036 x SD – 0.0566	= 1.2024 x SD – 0.0736
ET-D75LE10	1.3 - 1.7:1	16:9	= 1.1497 x SD – 0.0857	= 1.4860 x SD – 0.1085
	1.7 - 2.2:1	4:3	= 1.4070 x SD – 0.0857	= 1.8186 x SD – 0.1085
ET-D75LE20	1.7 - 2.4:1	16:9	= 1.4709 x SD – 0.0832	= 2.1373 x SD – 0.1162
	2.2 - 3.2:1	4:3	= 1.8002 x SD – 0.0832	= 2.6157 x SD – 0.1162
ET-D75LE30	2.4 - 4.7:1	16:9	= 2.1221 x SD – 0.1131	= 4.1155 x SD – 0.1765
	3.2 - 6.2:1	4:3	= 2.5971 x SD – 0.1131	= 5.0367 x SD – 0.1765
ET-D75LE40	4.6 - 7.4:1	16:9	= 4.0631 x SD – 0.1577	= 6.4779 x SD – 0.1615
	6.2 - 9.9:1	4:3	= 4.9726 x SD – 0.1577	= 7.9279 x SD – 0.1615
ET-D75LE8	7.3 - 13.8:1	16:9	= 6.4950 x SD – 0.3862	= 12.1692 x SD – 0.3598
	9.8 - 18.5:1	4:3	= 7.9489 x SD – 0.3862	= 14.8932 x SD – 0.3598

■ Fixed-focus lens

Projection lens Model No.	Throw ratio	Aspect ratio	Projection distance (L1) formula	Formula for distance between projector and screen (A1)	
				Min.	Max.
ET-D75LE90	0.36:1	16:9	= 0.312 x SD + 0.020	= 0.254 x SH – 0.114	= 0.370 x SH – 0.114
	0.48:1	4:3	= 0.381 x SD + 0.020		

Projection lens Model No.	Throw ratio	Aspect ratio	Projection distance (L) formula
ET-D75LE50	0.7:1	16:9	= 0.6240 x SD – 0.0713
	0.9:1	4:3	= 0.7637 x SD – 0.0713

Adjusting adjustable feet

Install the projector on a flat surface so that the front of the projector is parallel to the screen surface and the projection screen is rectangular.

If the screen is tilted downward, the projection screen can be adjusted to be rectangular by adjusting the front adjustable feet. The adjustable feet can also be used to adjust the projector to be level when it is tilted in the horizontal direction.

Adjustable feet can be extended by turning them as shown in the figure. Turning them in the opposite direction will return them to the original position.

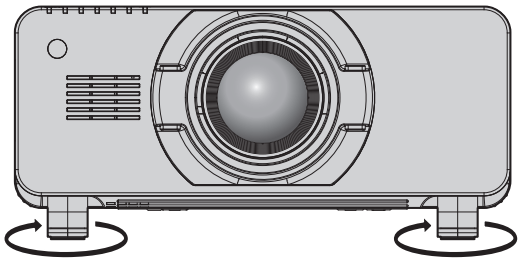

Adjustable range

Adjustable feet: Approx. 12 mm (15/32") each

Attention

- Heated air is expelled from the air exhaust port while the lamp is lit. Do not touch the air exhaust port directly with your hand when adjusting the adjustable feet. (➡ page 27)

Attaching/removing the projection lens (optional)

Move the lens position to the home position before replacing or removing the projection lens. (➡ page 67)

Attention

- Replace the projection lens after turning off the power of the projector.
- Do not touch the electric contacts of the projection lens. Dust or dirt may cause poor contact.
- Do not touch the surface of the projection lens with your bare hands.
- Before attaching the projection lens, remove the lens cover attached to the projection lens.

Note

- In case of the fixed-focus lens (Model No.: ET-D75LE90), precautions on handling the lens and attachment/removal procedures of the lens mount cover are different. Refer to the Operating Instructions of ET-D75LE90 for details.

Attaching the projection lens

Attach the projection lens using the following procedure.

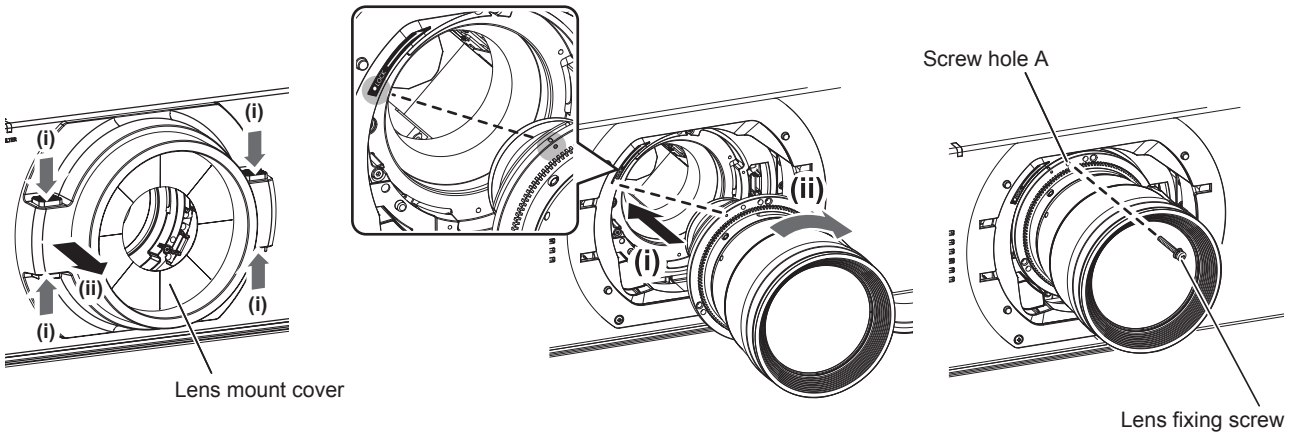

Fig. 1 Fig. 2 Fig. 3

1) **Remove the lens mount cover. (Fig. 1)**
   - Remove the lens mount cover by pulling it towards you while holding the left and right buttons from both the upper and lower side.

2) **Insert the projection lens by aligning the mark on the projection lens (orange) with the mark on the projector (◯ to the left of LOCK) and turn clockwise until it clicks. (Fig. 2)**

3) **Secure the projection lens with the supplied lens fixing screw. (Fig. 3)**
   - Use a Phillips screwdriver to secure it in screw hole A located to the right of mark on the projection lens (orange).
   - Some lenses may not have a screw hole A for securing the projection lens.

4) **Attach the lens mount cover.**

Attention

- Turn the projection lens counterclockwise to confirm that it does not come out.

Removing the projection lens

Remove the projection lens using the following procedure.

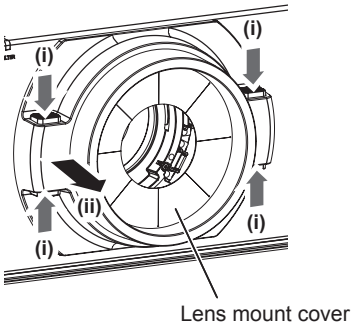

Fig. 1

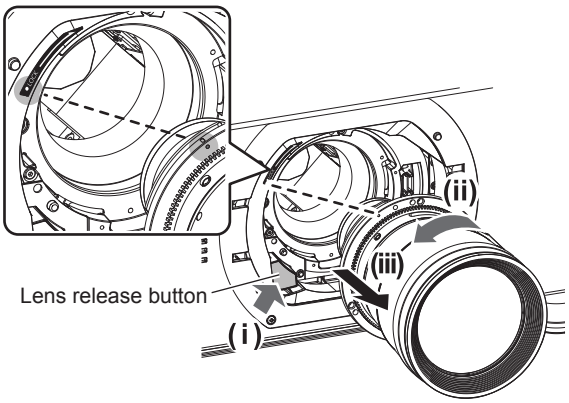

Fig. 2

1) **Remove the lens mount cover. (Fig. 1)**
   - Remove the lens mount cover by pulling it towards you while holding the left and right buttons from both the upper and lower side.

2) **Remove the lens fixing screw.**
   - Use a Phillips screwdriver to remove the first screw to the right of the mark on the projection lens (orange).

3) **While pressing the lens release button, remove the projection lens by turning it counterclockwise. (Fig. 2)**
   - Turn the projection lens counterclockwise until the mark on the projection lens (orange) is aligned with the mark on the projector (○ to the left of LOCK).

4) **Attach the lens mount cover.**

Note

- Some lenses may not have a screw hole to use to secure the projection lens.

Attention

- Store the removed projection lens where it will be free from vibration and impact.
- Store the removed lens fixing screw in a safe place.

Connecting

Before connecting

- Before connecting, carefully read the operating instructions for the external device to be connected.
- Turn off the power of all devices before connecting cables.
- Take note of the following points before connecting the cables. Failure to do so may result in malfunctions.
  - When connecting a cable to a device connected to the projector or the projector itself, touch any nearby metallic objects to eliminate static electricity from your body before performing work.
  - Do not use unnecessarily long cables to connect a device to the projector or to the projector body. The longer the cable, the more susceptible to noise it becomes. Since using a cable while it is wound makes it act like an antenna, it is more susceptible to noise.
  - When connecting cables, connect GND first, then insert the connecting terminal of the connecting device in a straight manner.
- Acquire any connection cable necessary to connect the external device to the system that is neither supplied with the device nor available as an option.
- If video signals from video equipment contain too much jitter, the images on the screen may wobble. In this case, a time base corrector (TBC) must be connected.
- The projector accepts video signals, Y/C signals, YC_BC_R/YP_BP_R signals, analog RGB signals (synchronization signals are TTL level), and digital signals.
- Some computer models are not compatible with the projector.
- Use a cable compensator when you connect devices to the projector using long cables. Otherwise the image may not display properly.
- Refer to “List of compatible signals” (➡ page 209) for the types of video signals that can be used with the projector.

<RGB 2 IN> terminal pin assignments and signal names

Outside view	Pin No.	Signal name	Pin No.	Signal name
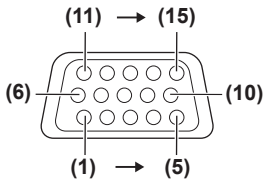	(1)	R/P_R	(9)	—
	(2)	G/Y	(10)	GND
	(3)	B/P_B	(11)	GND
	(4)	—	(12)	DDC data
	(5)	GND	(13)	SYNC/HD
	(6)	GND	(14)	VD
	(7)	GND	(15)	DDC clock
	(8)	GND		

<HDMI IN> terminal pin assignments and signal names

Outside view	Pin No.	Signal name	Pin No.	Signal name
Even-numbered pins of **(2)** to **(18)** 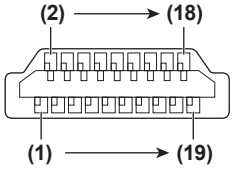 Odd-numbered pins of **(1)** to **(19)**	(1)	T.M.D.S data 2+	(11)	T.M.D.S clock shield
	(2)	T.M.D.S data 2 shield	(12)	T.M.D.S clock–
	(3)	T.M.D.S data 2–	(13)	CEC
	(4)	T.M.D.S data 1+	(14)	—
	(5)	T.M.D.S data 1 shield	(15)	SCL
	(6)	T.M.D.S data 1–	(16)	SDA
	(7)	T.M.D.S data 0+	(17)	DDC/CEC GND
	(8)	T.M.D.S data 0 shield	(18)	+5 V
	(9)	T.M.D.S data 0–	(19)	Hot plug detection
	(10)	T.M.D.S clock+		

<DVI-D IN> terminal pin assignments and signal names

Outside view	Pin No.	Signal name	Pin No.	Signal name
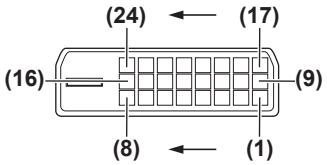	(1)	T.M.D.S data 2–	(13)	—
	(2)	T.M.D.S data 2+	(14)	+5 V
	(3)	T.M.D.S data 2/4 shield	(15)	GND
	(4)	—	(16)	Hot plug detection
	(5)	—	(17)	T.M.D.S data 0–
	(6)	DDC clock	(18)	T.M.D.S data 0+
	(7)	DDC data	(19)	T.M.D.S data 0/5 shield
	(8)	—	(20)	—
	(9)	T.M.D.S data 1–	(21)	—
	(10)	T.M.D.S data 1+	(22)	T.M.D.S clock shield
	(11)	T.M.D.S data 1/3 shield	(23)	T.M.D.S clock+
	(12)	—	(24)	T.M.D.S clock–

Connecting example: AV equipment

For <HDMI IN>/<DVI-D IN>/<RGB 1 IN> terminals

The connection example is for PT-DZ21K2 and PT-DS20K2.

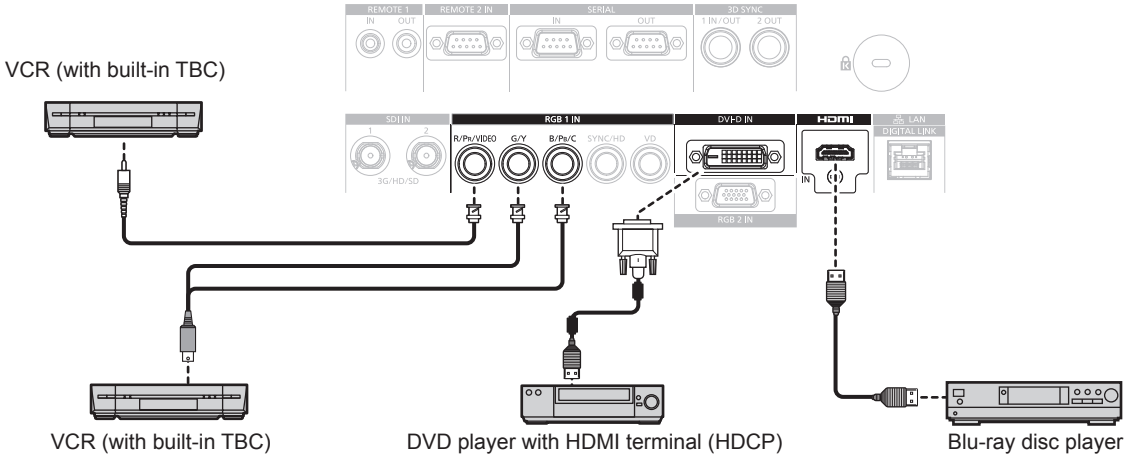

Attention

- Always use one of the following when connecting a VCR.
  - A VCR with built-in time base corrector (TBC)
  - A time base corrector (TBC) between the projector and the VCR
- If nonstandard burst signals are connected, the image may be distorted. In such a case, connect the time base corrector (TBC) between the projector and the external devices.

Note

- When entering DVI-D, it may be necessary to switch the setting using the [DISPLAY OPTION] menu → [DVI-D IN] → [EDID SELECT] depending on the external device to be connected.
- The <DVI-D IN> terminal can be connected to HDMI- or DVI-D-compliant devices. However, images may not appear or may not be displayed properly on some devices.
- For the HDMI cable, use an HDMI High Speed cable that conforms to the HDMI standards. If a cable that does not conform to the HDMI standards is used, images may be interrupted or may not be displayed.
- The <HDMI IN> terminal of the projector can be connected to an external device equipped with a DVI-D terminal using an HDMI/DVI conversion cable. However, this may not function properly for some external devices, and images may not be displayed.
- The projector does not support VIERA Link (HDMI).
- When the video signal and the Y/C signal are input, switch the setting using the [DISPLAY OPTION] menu → [RGB IN] → [RGB1 INPUT SETTING] (➡ page 113).

For <SDI IN 1>/<SDI IN 2> terminals (PT-DZ21K2, PT-DS20K2), <SDI IN> terminal (PT-DZ16K2)

The connection example is for PT-DZ21K2 and PT-DS20K2.

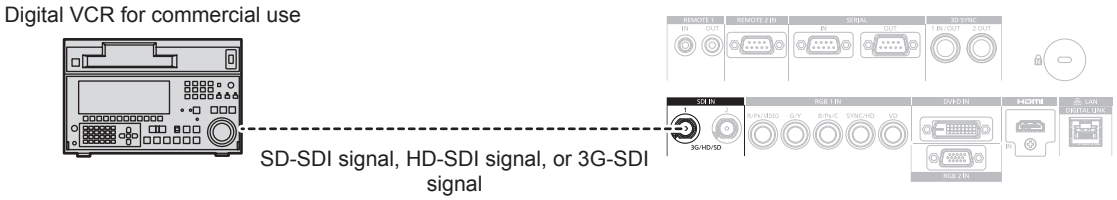

Note

- Use the [PICTURE] menu → [SYSTEM SELECTOR] to switch the input format.
- Some external devices to be connected require the [DISPLAY OPTION] menu → [SDI IN] to be set.
- Use a 5CFB or higher (such as 5CFB, or 7CFB) or a Belden 1694A or higher connection cable to properly transmit images. Use a connection cable of 100 m (328'1") length or less.
- To input the dual link signals, it is necessary to set [SDI LINK] in [SDI IN]. (Only for PT-DZ21K2, PT-DS20K2)
- To input the dual link signals, use same length and same type of cables to connect to the <SDI IN 1>/<SDI IN 2> terminals. The image may not be displayed correctly when the difference in length of the connection cables is 4 m (13'1") or more. (Only for PT-DZ21K2, PT-DS20K2)
- To input the dual link signals, directly connect with the external devices that will output the signal without using a distributor, etc. A phase difference between the LINK-A signal and the LINK-B signal may occur, and the image may not be displayed correctly. (Only for PT-DZ21K2, PT-DS20K2)
- When an unsteady signal is connected, an error in signal detection may occur. In such a case, use the [PICTURE] menu → [SYSTEM SELECTOR] to switch to a system that matches the signal format.

Connecting example: Computers

The connection example is for PT-DZ21K2 and PT-DS20K2.

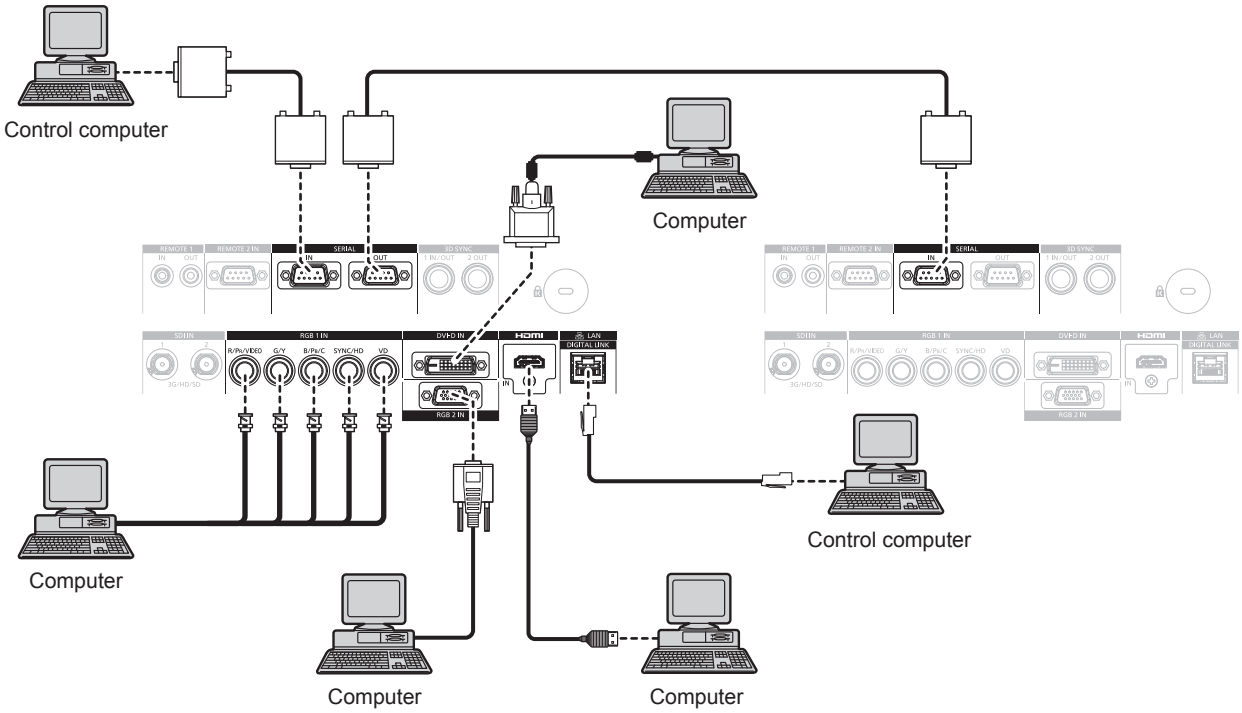

Attention

- When connecting the projector to a computer or an external device, use the power cord supplied with each device and commercially available shielded cables.

Note

- When entering DVI-D, it may be necessary to switch the setting using the [DISPLAY OPTION] menu → [DVI-D IN] → [EDID SELECT] depending on the external device to be connected.
- For the HDMI cable, use an HDMI High Speed cable that conforms to the HDMI standards. If a cable that does not conform to the HDMI standards is used, images may be interrupted or may not be displayed.
- The <HDMI IN> terminal of the projector can be connected to an external device equipped with a DVI-D terminal using an HDMI/DVI conversion cable. However, this may not function properly for some external devices, and images may not be displayed.
- The <DVI-D IN> terminal supports single links only.
- When entering the SYNC ON GREEN signal, do not enter sync signals to the <SYNC/HD> terminal or the <VD> terminal.
- If you operate the projector using the computer with the resume feature (last memory), you may have to reset the resume feature to operate the projector.

Connecting example using DIGITAL LINK

Twisted-pair-cable transmitters based on the communication standard HDBaseT™ such as the optional DIGITAL LINK output supported device (Model No.: ET-YFB100G, ET-YFB200G) use the twisted pair cable to transmit input images, Ethernet, and serial control signals, and the projector can input these digital signals to the <DIGITAL LINK/LAN> terminal.

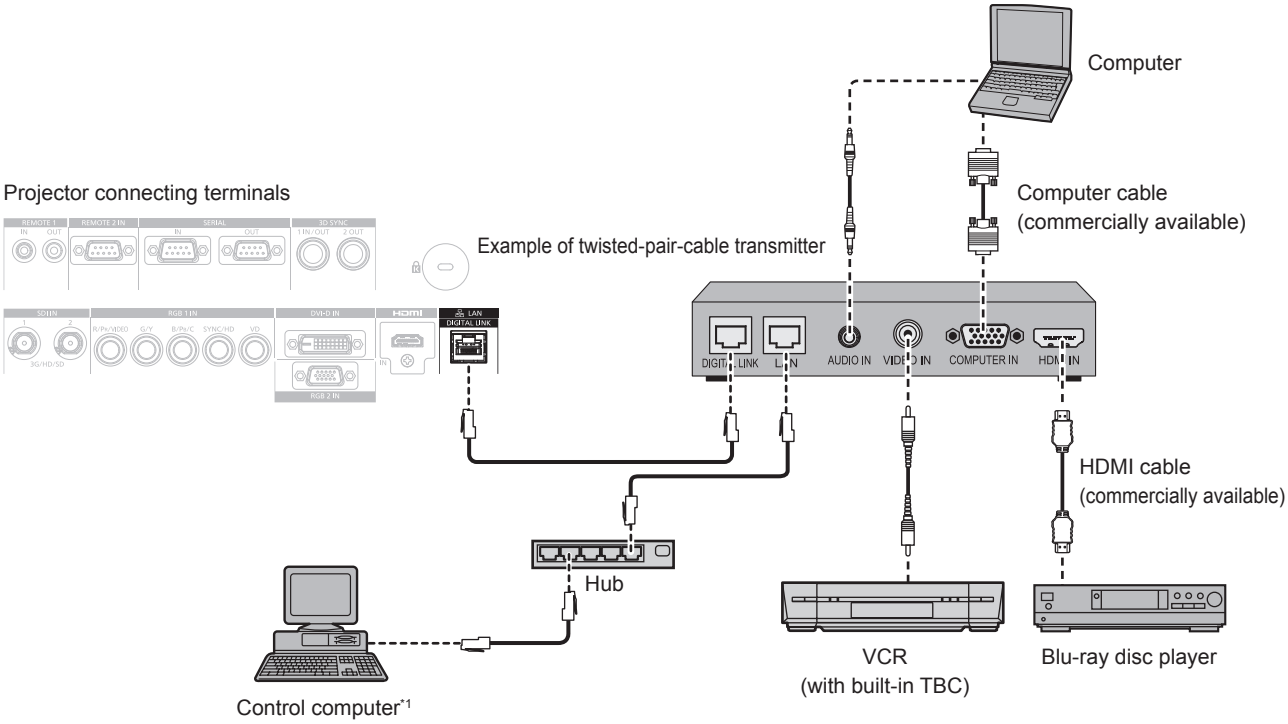

*1 Control target is the projector or the twisted-pair-cable transmitter. The control itself may not be possible depending on the twisted-pair-cable transmitter. Check the operating instructions of the device to be connected.

Attention

- Always use one of the following when connecting a VCR.
  - Use a VCR with built-in time base corrector (TBC).
  - Use a time base corrector (TBC) between the projector and the VCR.
- If nonstandard burst signals are connected, the image may be disrupted. In such a case, connect the time base corrector (TBC) between the projector and the external devices.
- Ask a qualified technician or your dealer to install the cable wiring between the twisted-pair-cable transmitter and the projector. Image may be disrupted if cable transmission characteristics cannot be obtained due to inadequate installation.
- For the LAN cable between the twisted-pair-cable transmitter and the projector, use a cable that meets the following criteria:
  - Conforming to CAT5e or higher standards
  - Shielded type (including connectors)
  - Straight-through
  - Single wire
- When laying cables between the twisted-pair-cable transmitter and the projector, confirm that cable characteristics are compatible with CAT5e or higher using tools such as a cable tester or cable analyzer.
  When a relay connector is used, include it in the measurement.
- Do not use a hub between the twisted-pair-cable transmitter and the projector.
- When connecting to the projector using a twisted-pair-cable transmitter (receiver) of other manufacturers, do not place another twisted-pair-cable transmitter between the twisted-pair-cable transmitter of other manufacturers and the projector. This may cause image to be disrupted.
- Do not pull cables forcefully. Also, do not bend or fold cables unnecessarily.
- To reduce the effects of noise as much as possible, stretch out the cables between the twisted-pair-cable transmitter and the projector without any loops.
- Lay the cables between the twisted-pair-cable transmitter and the projector away from other cables, particularly power cables.
- When laying multiple cables, run them side by side along the shortest distance possible without bundling them together.
- After laying the cables, go to the [NETWORK] menu → [DIGITAL LINK STATUS] and confirm that the value of [SIGNAL QUALITY] is displayed in green which indicates normal quality. (➡ page 155)

Note

- For the HDMI cable, use an HDMI High Speed cable that conforms to the HDMI standards. If a cable that does not conform to the HDMI standards is used, images may be interrupted or may not be displayed.
- The projector does not support VIERA Link (HDMI).
- The maximum transmission distance between the twisted-pair-cable transmitter and the projector is 100 m (328'1"). It is possible to transmit up to 150 m (492'2") if the twisted-pair-cable transmitter supports the long-reach communication method. If this distance is exceeded, image may be disrupted or a malfunction may occur in LAN communication. Please note that Panasonic does not support the use of the projector outside the maximum transmission distance. When connecting with the long reach, there may be a limitation to the video signal or distance which can be transmitted, depending on the specification of the twisted-pair-cable transmitter.

- For twisted-pair-cable transmitters of other manufacturers of which the operation has been verified with the projector, visit the Panasonic website (http://panasonic.net/avc/projector/). Note that the verification for devices of other manufacturers has been made for the items set by Panasonic Corporation, and not all the operations have been verified. For operation or performance problems caused by the devices of other manufacturers, contact the respective manufacturers.

Chapter 3 Basic Operations

This chapter describes basic operations to start with.

Switching on/off the projector

Connecting the power cord

Make sure that the supplied power cord is securely fixed to the projector body to prevent it from being removed easily.

Confirm that the <MAIN POWER> switch is on the <OFF> side before connecting the power cord.

For details of power cord handling, refer to “Read this first!” (➡ page 5).

How to attach the power cord

1) **Check the shapes of the <AC IN> terminal on the side of the projector and the power cord connector, then insert the connector completely in the correct direction.**

How to remove the power cord

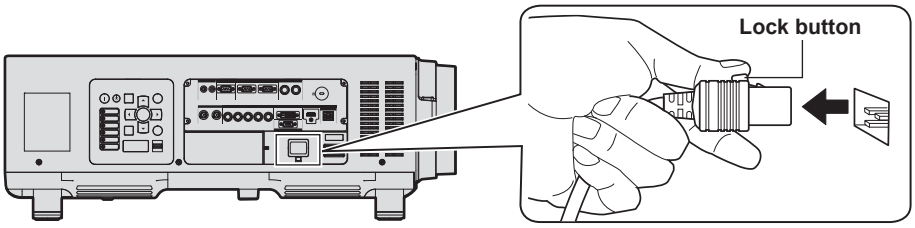

1) **Confirm that the <MAIN POWER> switch on the side of the projector is on the <OFF> side, and remove the power plug from the outlet.**

2) **Remove the power cord connector from the <AC IN> terminal of the projector while pressing the lock button.**

Power indicator

Indicate the status of the power. Check the status of the power indicator <ON (G)/STANDBY (R)> before operating the projector.

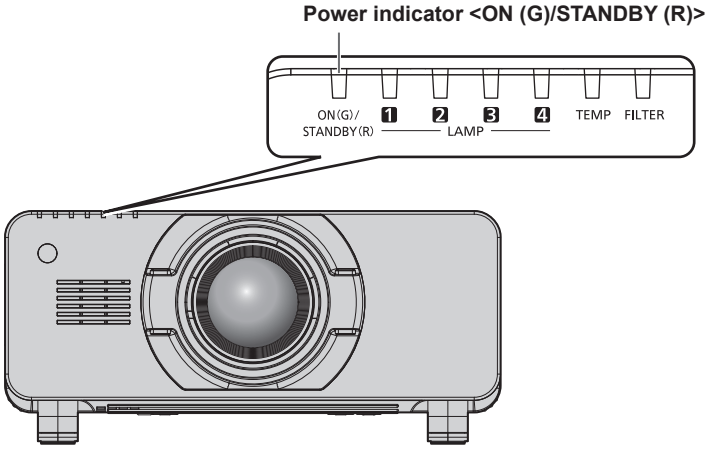

Indicator status		Projector status
Off		The main power is switched off.
Red	Lit	The power is switched off. (standby mode) Projection will start when the power on < | > button is pressed. ● The projector may not operate when the lamp indicators <LAMP1>/<LAMP2>/<LAMP3>/<LAMP4> or the temperature indicator <TEMP> are blinking. (➡ page 179)
Green	Lit	Projecting.
Orange	Lit	The projector is preparing to switch off the projector. The power is switched off after a while. (Changes to the standby mode.)

Note

- While the power indicator <ON (G)/STANDBY (R)> lights in orange, the fan is running to cool the projector.
- For about 150 seconds after the projector is switched off and the luminous lamp cooling is started, the lamp indicators do not light up even if the power is switched on. After the power indicator <ON (G)/STANDBY (R)> lights in red, turn on the power again.
- The projector consumes power even in standby mode (power indicator <ON (G)/STANDBY (R)> lit in red). Refer to “Power consumption” (➡ page 215) for the power consumption.
- When the projector receives the signal from the remote control, the power indicator <ON (G)/STANDBY (R)> will blink in the following color according to the status of the projector.
  - When the projector is in projection mode: Green
  - When the projector is in standby mode: Orange

  However, if the [PROJECTOR SETUP] menu → [STANDBY MODE] is set to [ECO], the indicator will stay lit in red and will not blink if the projector is in standby mode.
- The power indicator <ON (G)/STANDBY (R)> will blink slowly in green while the shutter function is in use (shutter: closed).
- If the power indicator <ON (G)/STANDBY (R)> is blinking in red, consult your dealer.

Switching on the projector

Install the projection lens before switching on the projector.
Remove the lens cover first.

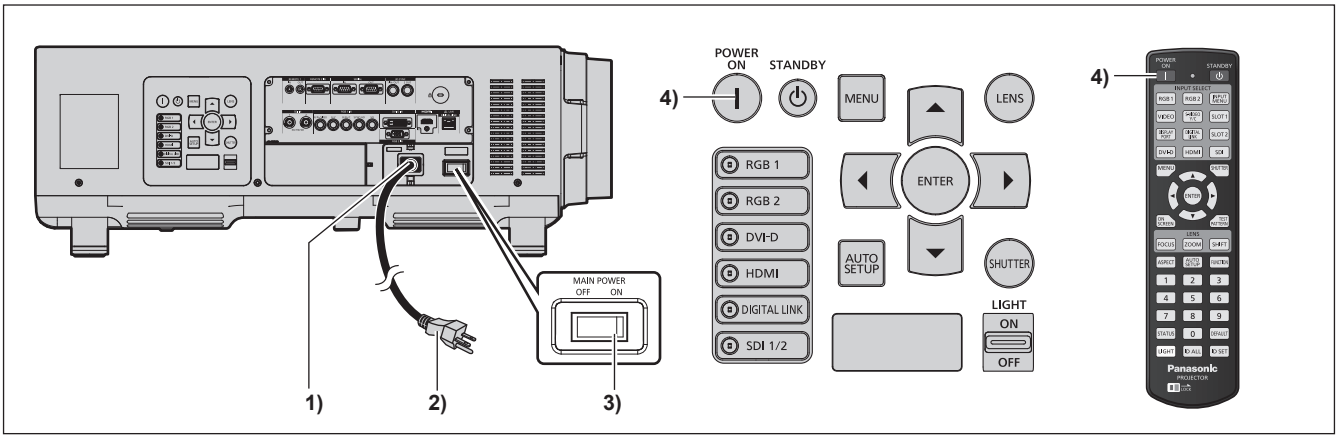

1) Connect the power cord to the projector.

2) Connect the power plug to an outlet.

- (AC 200 V - 240 V 50 Hz/60 Hz)

3) Press the <ON> side of the <MAIN POWER> switch to turn on the power.

- The power indicator <ON (G)/STANDBY (R)> lights in red, and the projector enters the standby mode.

4) Press the power on <|> button.

- The power indicator <ON (G)/STANDBY (R)> lights in green and the image is soon projected on the screen.

Attention

- Using the projector while the lens cover is attached may cause the device to heat up and result in a fire.

Note

- If the projector is switched on at around 0 °C (32 °F), a warm-up period of up to five minutes (PT-DZ16K2: up to 20 minutes) may be necessary until an image is displayed.
  The temperature indicator <TEMP> lights during the warm-up period. When the warm-up is completed, the temperature indicator <TEMP> turns off and the projection starts. Refer to “When an indicator lights up” (➡ page 179) for the indicator status display.
- If the operating environment temperature is low and a warm-up takes more than five minutes (PT-DZ16K2: 20 minutes), the projector will judge that a problem has occurred and the power will automatically be set to standby mode. If this happens, increase the operating environment temperature to 0 °C (32 °F) or higher, turn off the main power, and then turn on the power again.
- If the [PROJECTOR SETUP] menu → [STANDBY MODE] is set to [ECO], it may take approx. 10 seconds longer before the projector starts projecting after the power is turned on, compared with when [NORMAL] is set.
- When the [PROJECTOR SETUP] menu → [INITIAL STARTUP] is set to [LAST MEMORY], and the power was turned off at the previous use by pressing the <OFF> side of the <MAIN POWER> switch while projecting or with the power breaker, the power indicator <ON (G)/STANDBY (R)> will light up in green and the image is projected after a while when the power is turned on by pressing <ON> side of the <MAIN POWER> switch while the power plug is plugged into the outlet, or when the power breaker is turned on.

When the initial setting screen is displayed

When the projector is switched on for the first time after purchase, as well as when [ALL USER DATA] is executed from the [PROJECTOR SETUP] menu → [INITIALIZE], the focus adjustment screen is displayed after projection starts, then the **[INITIAL SETTING]** screen is displayed. Set them according to the circumstances.
In other occasions, you can change the settings by menu operations.
If you press the <MENU> button while the **[INITIAL SETTING]** screen is displayed, you can go back to the previous screen.

Focus adjustment

Adjust the focus to display the menu screen clearly.
You may also need to adjust the zoom and shift.
Refer to “Adjusting the focus, zoom, and shift” (➡ page 65) for details.

1) Press ▲▼◀▶ to adjust the focus.

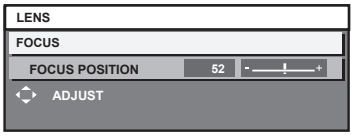

2) Press the <MENU> button to proceed to the initial setting.

Initial setting (display language)

Select the language to show on the screen.
After completed the initial setting, you can change the display language from the [DISPLAY LANGUAGE] menu.

1) Press ▲▼ to select the display language.

2) Press the <ENTER> button to proceed to the initial setting.

Initial setting (installation setting)

Set [PROJECTION METHOD] depending on the installation mode. Refer to “Installation mode” (➡ page 33) for details.

After completed the initial setting, you can change the setting from the [PROJECTOR SETUP] menu → [PROJECTION METHOD].

1) Press ◀▶ to switch the setting.

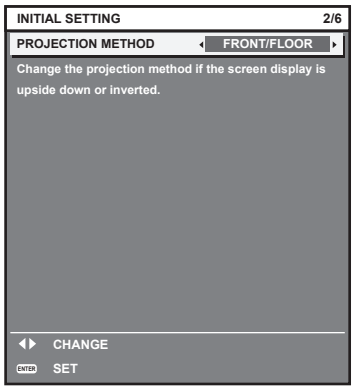

2) Press the <ENTER> button to proceed to the initial setting.

Initial setting (standby mode)

Set the operation mode during standby mode. The factory default setting is [NORMAL], which allows you to use the network function during standby mode. To keep power consumption low during standby mode, set this function to [ECO]. After completed the initial setting, you can change the setting from the [PROJECTOR SETUP] menu → [STANDBY MODE].

1) Press ◀▶ to switch the setting.

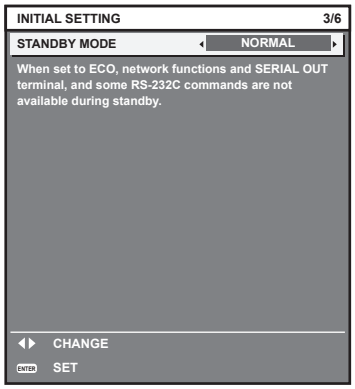

2) Press the <ENTER> button to proceed to the initial setting.

Note

- The preceding initial setting screen is displayed when the projector is switched on for the first time after purchase. When [ALL USER DATA] is executed from the [PROJECTOR SETUP] menu → [INITIALIZE], the [STANDBY MODE] setting before execution is displayed.

Initial setting (screen setting)

(Only for PT-DZ21K2, PT-DS20K2, PT-DZ16K2)
Set the screen format (aspect ratio) and display position of the image. After completed the initial setting, you can change the settings of each item from the [DISPLAY OPTION] menu → [SCREEN SETTING].

1) Press ▲▼ to select an item.

2) Press ◀▶ to switch the setting.

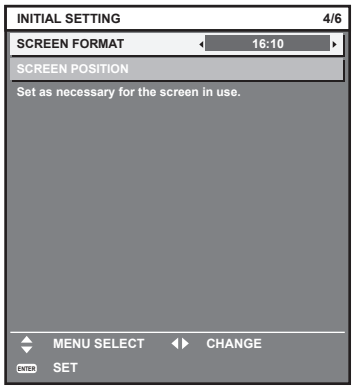

3) Press the <ENTER> button to proceed to the initial setting.

Initial setting (time zone)

Set [TIME ZONE] in accordance with the country or region where you use the projector.
After completed the initial setting, you can change the setting from the [PROJECTOR SETUP] menu → [DATE AND TIME]. The current settings are displayed in [LOCAL DATE] and [LOCAL TIME].

1) Press ◀▶ to switch the setting.

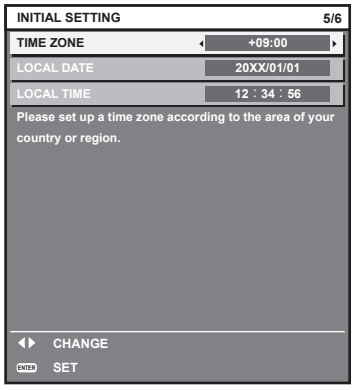

2) Press the <ENTER> button to proceed to the initial setting.

Note

- In the factory default setting, the time zone of the projector is set to +09:00 (Japan and Korean Standard Time). Change the setting in the [PROJECTOR SETUP] menu → [DATE AND TIME] → [TIME ZONE] to the time zone of the region where you use the projector.

Initial setting (date and time)

Set the local date and time. After completed the initial setting, you can change the setting from the [PROJECTOR SETUP] menu → [DATE AND TIME].
To set the date and time automatically, refer to “Setting the date and time automatically” (➡ page 140).

1) Press ▲▼ to select an item.

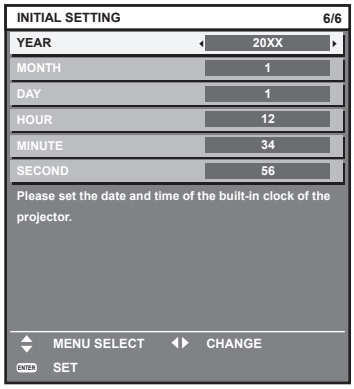

2) Press ◀▶ to switch the setting.

3) Press the <ENTER> button.

- Confirm the setting value and complete the initial setting.

Making adjustments and selections

It is recommended that images be projected continuously for at least 30 minutes before the focus is adjusted.

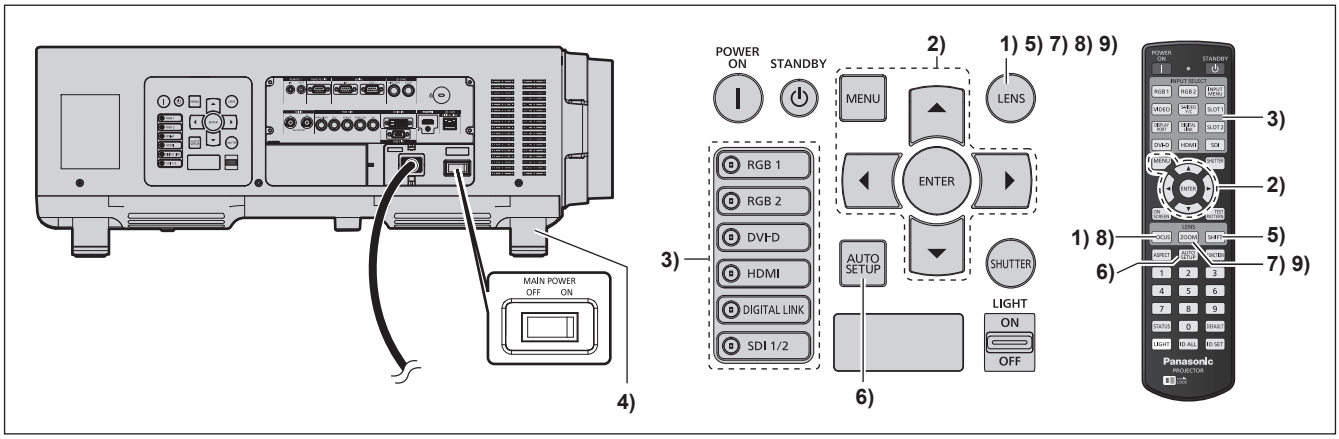

1) Press the <FOCUS> button to roughly adjust the focus of the image. (➡ page 65)

2) Change the setting of the [PROJECTOR SETUP] menu → [PROJECTION METHOD] depending on the installation mode. (➡ page 33)

- Refer to “Navigating through the menu” (➡ page 77) for the operation of the menu screen.

3) Press the input selection button (<RGB1>, <RGB2>, <DIGITAL LINK>, <DVI-D>, <HDMI>, <SDI 1/2>, or <SDI>) to select the input signal.
(SDI input is supported only for PT-DZ21K2, PT-DS20K2, and PT-DZ16K2.)

4) Adjust the front, back and sideway tilt of the projector with the adjustable feet. (➡ page 49)

5) Press the <SHIFT> button to adjust the image position.

6) If the input signal is the analog RGB signal or the DVI-D/HDMI signal, press the <AUTO SETUP> button.

7) Press the <ZOOM> button to adjust the image size to match the screen.

8) Press the <FOCUS> button again to adjust the focus.

9) Press the <ZOOM> button again to adjust the zoom and the image size to match the screen.

Note

- When the projector is switched on for the first time after purchase, as well as when [ALL USER DATA] is executed from the [PROJECTOR SETUP] menu → [INITIALIZE], the focus adjustment screen is displayed after projection starts, then the **[INITIAL SETTING]** screen is displayed. Refer to "When the initial setting screen is displayed" (➡ page 60) for details.

Switching off the projector

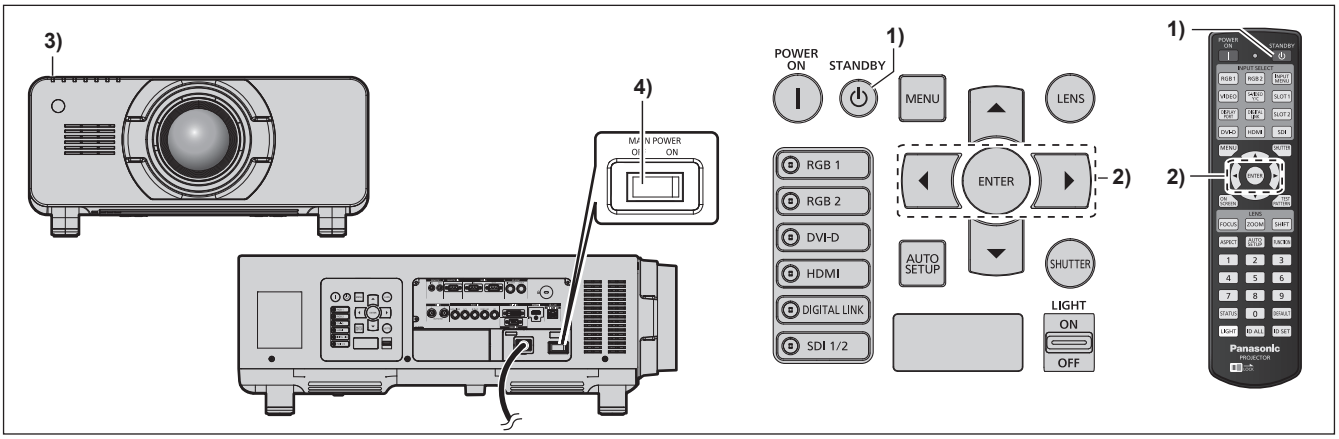

1) Press the power standby <⏻> button.

- The **[POWER OFF(STANDBY)]** confirmation screen is displayed.

2) Press ◀▶ to select [OK], and press the <ENTER> button.

(Or press the power standby <⏻> button again.)

- Projection of the image will stop, and the power indicator <ON (G)/STANDBY (R)> on the projector body lights in orange. (The fan keeps running.)

3) Wait until the power indicator <ON (G)/STANDBY (R)> on the projector body lights in red (and the fan stops) for 170 seconds.

4) Press the <OFF> side of the <MAIN POWER> switch to turn off the power.

Note

- Do not switch on the projector and project images immediately after switching off the projector.
  Turning on the power while the lamp is still hot may shorten the lamp life.
- For about 150 seconds after the projector is switched off and the luminous lamp cooling is started, the lamp indicators do not light up even if the power is switched on. Even after the specified period, the lamp may not light up if the projector is switched on. In such a case, switch on the projector again after the power indicator <ON (G)/STANDBY (R)> lights in red.
- **Even when the power standby <⏻> button is pressed and the projector is switched off, the projector consumes power if the main power of the projector is on.**
  When the [PROJECTOR SETUP] menu → [STANDBY MODE] is set to [ECO], use of some functions is restricted, but the power consumption during standby can be conserved.

Projecting

Check the projection lens attachment (➡ page 50), external device connection (➡ page 52), power cord connection (➡ page 58), switch on the power (➡ page 59) to start projecting. Select the video for projection, and adjust appearance of the projected image.

Selecting the input signal

Select an input signal.

1) **Press the input selection button (<RGB1>, <RGB2>, <DIGITAL LINK>, <DVI-D>, <HDMI>, <SDI 1/2>, or <SDI>) on the remote control or the control panel.**
   (SDI input is supported only for PT-DZ21K2, PT-DS20K2, and PT-DZ16K2.)
   - The image of the signal being input in the selected terminal is projected.

Attention

- Images may not be projected properly depending on the external device, or the blu-ray disc or DVD disc, to be played back.
  Set the [PICTURE] menu → [SYSTEM SELECTOR].
- Confirm the aspect ratio of the projection screen and the image, and switch to an optimum aspect ratio from the [POSITION] menu → [ASPECT].

Adjusting the focus, zoom, and shift

If the projected image or the position is not correct when the positioning of the projector and the screen is correctly installed, adjust the focus, zoom, and shift.
This section describes the adjustment method when anything other than the fixed-focus lens (Model No.: ET-D75LE90) is used. When the fixed-focus lens (Model No.: ET-D75LE90) is used, refer to “Adjusting the lens position and focus when the fixed-focus lens (Model No.: ET-D75LE90) is used” (➡ page 66).

Using the control panel

1) **Press the <LENS> button on the control panel.**
   - Pressing the button changes the adjustment screen in the order of [FOCUS], [ZOOM], and [SHIFT].
2) **Select each item and press ▲▼◀▶ to adjust it.**

Using the remote control

1) **Press the lens buttons (<FOCUS>, <ZOOM>, <SHIFT>) on the remote control.**
   - <FOCUS> button: Adjusts focus.
   - <ZOOM> button: Adjusts zoom.
   - <SHIFT> button: Adjusts shift.
2) **Select each item and press ▲▼◀▶ to adjust it.**

CAUTION

During the lens shift operation, do not insert your hand in any opening around the lens.
Your hand may be caught in between, resulting to injury.

Note

- When the projection lens without the zoom function is attached, the zoom adjustment screen will be displayed. However, operation is not possible.
- When the fixed-focus lens (Model No.: ET-D75LE50) is used, do not use the shift adjustment, and use the projector with the lens position at the home position. (➡ page 67)
- The adjustment can be performed faster by pressing and holding ▲▼◀▶ for approximately three seconds or longer while adjusting the focus and shift.
- It is recommended that images be projected continuously for at least 30 minutes before the focus is adjusted.
- Only [FOCUS] is shown in yellow so that the displayed menu item can be recognized by color, even when the projector is not focused and displayed characters are unreadable. (Factory default)
  The display color of [FOCUS] depends on the setting of the [DISPLAY OPTION] menu → [ON-SCREEN DISPLAY] → [OSD DESIGN].
- When the power is switched off during focus and shift adjustment, lens calibration needs to be performed the next time the power is switched on. (➡ page 140)

- When the main power is switched off during focus adjustment, lens calibration is performed automatically during the next focus adjustment.
- When the main power is switched off during shift adjustment, a lens calibration error screen will be displayed during the next shift adjustment. Execute the [PROJECTOR SETUP] menu → [LENS CALIBRATION].
- When the lens calibration error is displayed even though [LENS CALIBRATION] was executed, ask your dealer to repair the unit.

Adjusting the lens position and focus when the fixed-focus lens (Model No.: ET-D75LE90) is used

After attaching the projection lens, adjust the lens position and the focus with the projector correctly installed against the screen.

The focus balance between the center and periphery of the projected image will differ depending on the size of the projected image when the fixed-focus lens (Model No.: ET-D75LE90) is attached. Adjust the focus balance of the periphery with the fixed-focus lens (Model No.: ET-D75LE90) as necessary.

1) Move the lens to the ET-D75LE90 lens standard position.

- While the shift adjustment screen is displayed, press the <DEFAULT> button on the remote control to display the **[HOME POSITION]** screen. Select [D75LE90] to move the lens to the lens standard position. Refer to “Setting the lens position” (➡ page 67) for details.

2) Adjust the focus at the center of projected image.

- For the steps to adjust the focus, refer to “Adjusting the focus, zoom, and shift” (➡ page 65).

3) Loosen the lock screw and turn the periphery focus adjustment ring by hand to adjust the focus in the periphery of the screen.

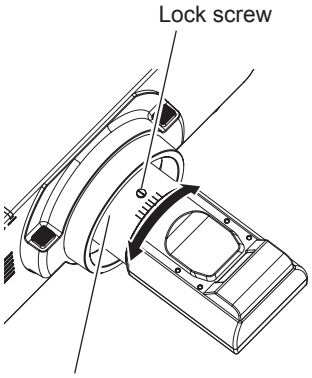

4) Check the focus at the center of the image again and make fine adjustments.

5) Tighten the lock screw.

- Periphery focus adjustment ring is fixed.

Note

- The projected image size and scale shown on the periphery focus adjustment ring are an approximate guide.

Setting the lens position

To move the lens position to the home position or the lens standard position, perform the following procedure.

1) Press the <DEFAULT> button on the remote control while the shift adjustment screen is displayed.

- The **[HOME POSITION]** screen is displayed.

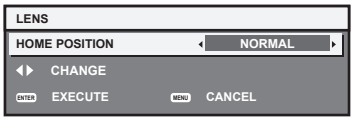

2) Press ◀▶ to switch the item.

- The items will switch each time you press the button.

[NORMAL]	Moves the lens to the home position. Select this item when replacing or removing the projection lens. Select this item when the fixed-focus lens (Model No.: ET-D75LE50) is used for projection.
[D75LE90]	Moves the lens to the ET-D75LE90 lens standard position. Select this item when the fixed-focus lens (Model No.: ET-D75LE90) is used for projection.

3) Press the <ENTER> button.

- [PROGRESS] is displayed in the **[HOME POSITION]** screen, and the lens position returns to the home position or the lens standard position.

Note

- Complete the operation within approximately 5 seconds after the **[HOME POSITION]** screen is displayed. The **[HOME POSITION]** screen will disappear after time limit.
- The home position of the lens is used when the lens is being replaced or when the projector is being stored, and it is not the optical center of the screen.
- You can also display the **[HOME POSITION]** screen by pressing the <LENS> button on the control panel or the <SHIFT> button on the remote control for at least three seconds.

Adjustment range by the lens position shift (optical shift)

Perform the lens position shift within the adjustment range.
The focus may change when the lens position is shifted out of the adjustment range. This is because the shift of the lens is restricted to protect the optical parts. Projection position can be adjusted with the optical axis shift function based on the position of the projected image in the home position (standard projection position) or the position of the projected image in the ET-D75LE90 lens standard position (reference projection position).

■ For PT-DZ21K2

Projection lens Model No.		
ET-D75LE8, ET-D75LE10, ET-D75LE20, ET-D75LE30, ET-D75LE40	**ET-D75LE6**	**ET-D75LE90**
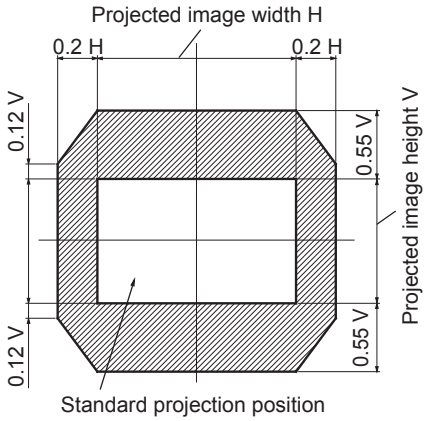	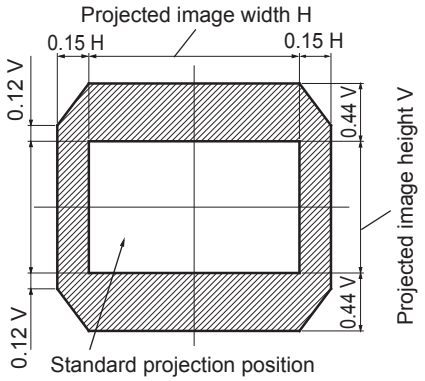	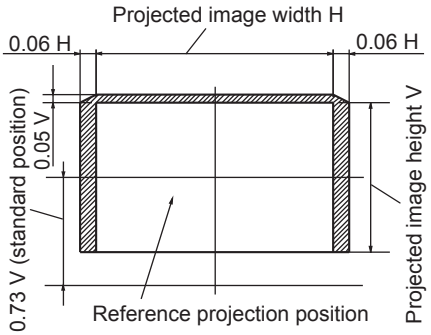

■ For PT-DS20K2

Projection lens Model No.	
ET-D75LE8, ET-D75LE10, ET-D75LE20, ET-D75LE30, ET-D75LE40	ET-D75LE6
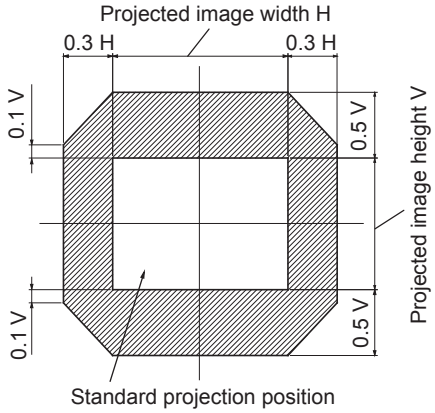	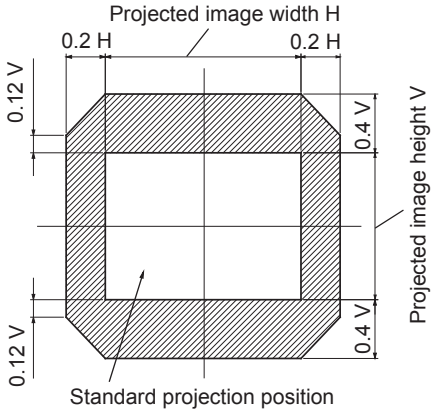

■ For PT-DW17K2

Projection lens Model No.		
ET-D75LE8, ET-D75LE10, ET-D75LE20, ET-D75LE30, ET-D75LE40	ET-D75LE6	ET-D75LE90
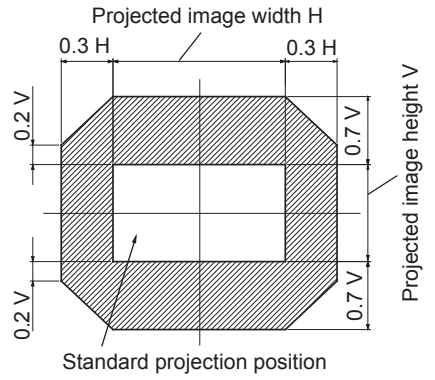	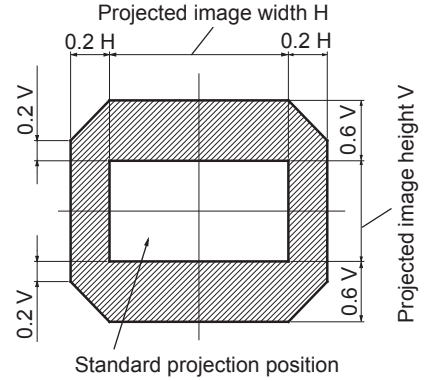	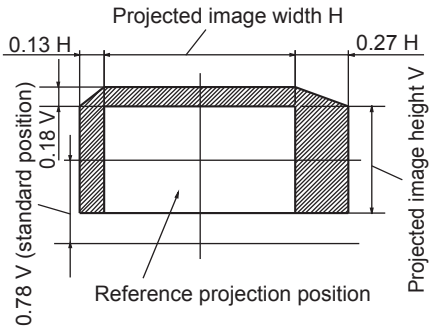

■ For PT-DZ16K2

Projection lens Model No.		
ET-D75LE8, ET-D75LE10, ET-D75LE20, ET-D75LE30, ET-D75LE40	ET-D75LE6	ET-D75LE90
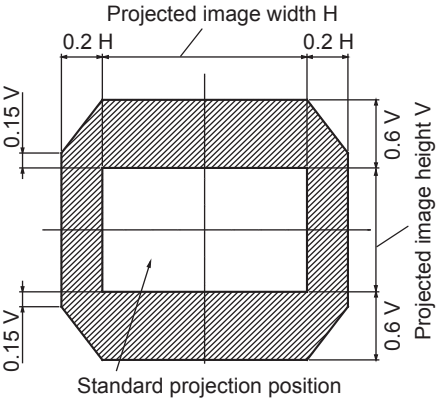	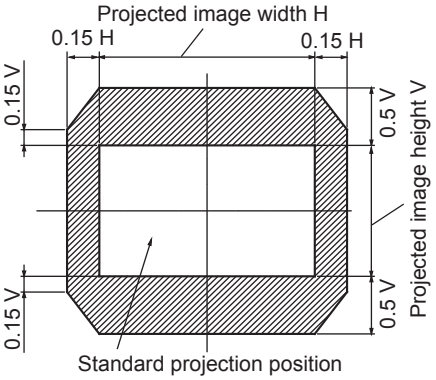	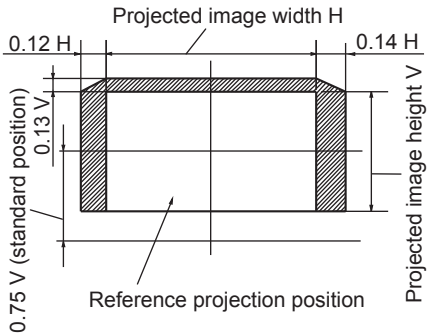

Note

- When the optional fixed-focus lens (Model No.: ET-D75LE50) is attached, use it in the standard projection position without adjusting shift.

- When the optional fixed-focus lens (Model No.: ET-D75LE90) is attached to the PT-DS20K2, use it in the reference projection position without adjusting shift.

Adjusting the lens mounter when the focus is unbalanced

Focus balance

Relationship between the tilt of the lens and the screen focus surface

When the projection lens is tilted in contrast with the image forming surface, tilting the front side (screen side) of the projection lens downwards (in the direction of the dotted arrow line), the upper side of the screen focus surface will tilt inwards and the lower side will tilt outwards as shown in the example.

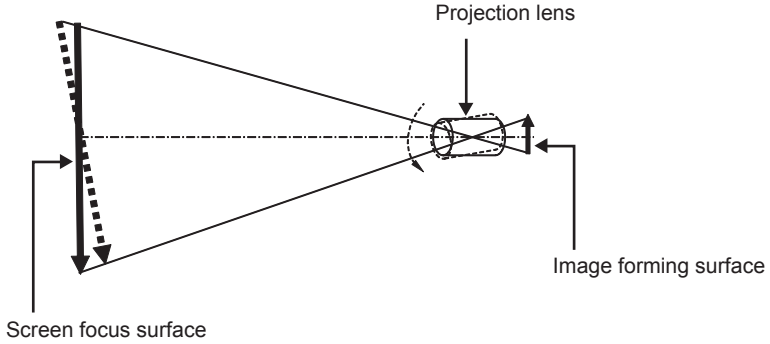

How to adjust the focus balance (adjustment by tilting the lens mounter)

When the entire screen surface is not uniform even if the focus has been adjusted, the lens mounter has focus adjustment screws in three locations.

- Tool used: Hex driver or Allen wrench (diagonal 2.5 mm (3/32"))
- The Allen wrench is included with the projection lens ET-D75LE6, ET-D75LE8.

Lens mounter structure

Focus adjustment screws (a), (b), and (c) can be turned to move the lens mount bracket back and forth.

Also, tightening the fixed screws locks the lens mount bracket in place so it does not move.

When a projection lens with a large weight is installed, or when the projector is installed on an inclination, the lens may tilt and the focus may become unbalanced. In these cases, perform adjustment by referring to the relationship between the adjustment location and adjustment screws.

■ Front view diagram of the lens mounter (viewed from the screen side)

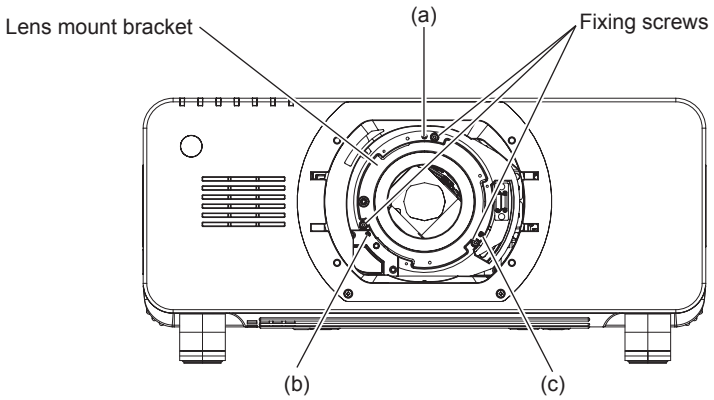

Note

- Focus adjustment screws (a), (b), and (c) are adjusted with the lens attached.

Adjustment procedure

■ Relationship between the adjustment location and adjustment screws

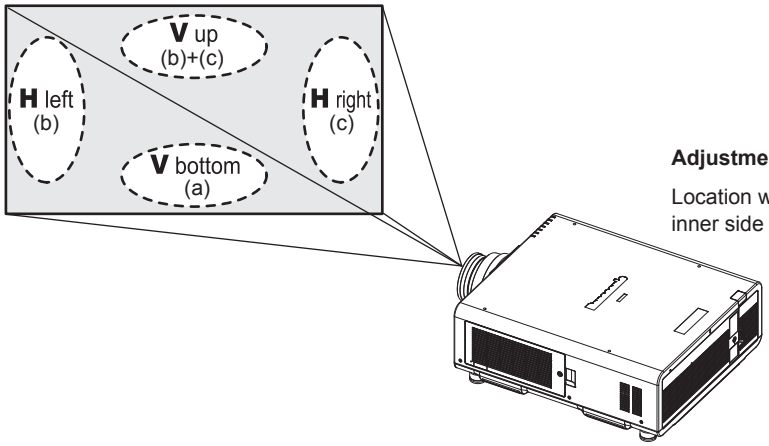

Adjustment location:

Location where the just focus point of the screen is in the inner side of the screen

	When the just focus point of the screen in V up (top in the vertical direction) is in the inner side of the screen	When the just focus point of the screen in V bottom (bottom in the vertical direction) is in the inner side of the screen	When the just focus point of the screen in H left (left in the horizontal direction) is in the inner side of the screen	When the just focus point of the screen in H right (right in the horizontal direction) is in the inner side of the screen
(a)	Rotate counterclockwise	—	—	—
(b)	—	Rotate counterclockwise	Rotate counterclockwise	—
(c)	—	Rotate counterclockwise	—	Rotate counterclockwise

1) **Press the <FOCUS> button on the remote control or the <LENS> button on the control panel to display the focus adjustment screen.**

2) **Press ▼ to shift the focus of the entire screen once.**

3) **Press ▲ to stop on any part of the screen to be the first just focus point.**
   - For the location where focus is shifted in this state, the just focus point is on the inner side of the screen.

4) **Loosen the fixed screws in the position relative to the location where the focus is shifted the most (the location where the just focus point is shifted the most towards the inner side in Step 2)) up to two rotations.**
   - Turn screws clockwise in two locations, or at least in one location when making an adjustment.

5) **Slowly turn the focus adjustment screws corresponding to the locations counterclockwise and stop where the image is in focus. (➡ page 69)**
   - If the screws are turned counterclockwise, the tilt of the lens will change by moving the lens mount bracket of the lens mounter forward (screen side), and in the projected image on the screen, the focus point in the opposite direction of the adjustment screws will move from the inner side of the screen to the outside.

6) **Press the <SHIFT> button on the remote control or the <LENS> button on the control panel to display the shift adjustment menu, and reset the screen position of the projected image on the screen surface back to an optimal state.**

7) **Perform focus adjustment again near the center of the screen and if it is still not enough, fine tune the amount of rotation of the adjustment screws.**

8) **When adjustments have been made, securely tighten the loosened fixing screws.**

9) **Adjust the focus again using the remote control.**

Operating with the remote control

Switching the input

The input for projection can be switched. Method to switch the input is as follows.

- Press the input selection button and directly specify the input to project.
- Display the input selection screen and select the input to project from the list.

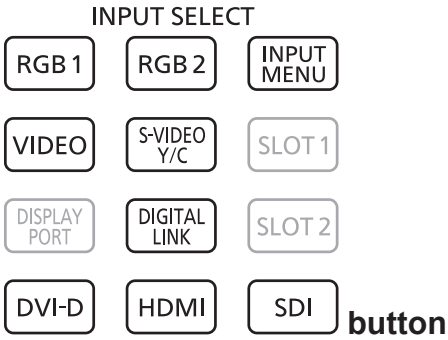

Switching the input directly

The input for projection can be switched by directly specifying it.

1) Press the input selection button (<RGB1>, <RGB2>, <VIDEO>, <S-VIDEO Y/C>, <DIGITAL LINK>, <DVI-D>, <HDMI>, <SDI>).

- This operation can be also performed using the buttons on the control panel.

<RGB1> <VIDEO> <S-VIDEO Y/C>	Switches the input to RGB1.
<RGB2>	Switches the input to RGB2.
<DIGITAL LINK>	Switches the input to DIGITAL LINK.
<DVI-D>	Switches the input to DVI-D.
<HDMI>	Switches the input to HDMI.

<SDI>[*1]	(PT-DZ21K2, PT-DS20K2) Switches the input to SDI1 or SDI2. Switches to the other input when one input has already been selected. Also, input selection can be fixed to SDI1 or SDI2 using the [SECURITY] menu → [CONTROL DEVICE SETUP]. (PT-DZ16K2) Switches the input to SDI.

*1 SDI input is supported only for PT-DZ21K2, PT-DS20K2, and PT-DZ16K2.

Note

- When the optional DIGITAL LINK output supported device (Model No.: ET-YFB100G, ET-YFB200G) is connected to the <DIGITAL LINK/LAN> terminal, the input on the DIGITAL LINK output supported device changes each time the <DIGITAL LINK> button is pressed. The input can also be changed using the RS-232C control command.
  For twisted-pair-cable transmitters of other manufacturers, switch the input on the projector to DIGITAL LINK, and then switch the input on the twisted-pair-cable transmitter.
- Configure [RGB1 INPUT SETTING] of the [DISPLAY OPTION] menu → [RGB IN] (➡ page 113) to match the signal to be input to the <RGB 1 IN> terminal.

Switching the input by displaying the input selection screen

The input for projection can be selected by displaying the input selection screen.

1) Press the <INPUT MENU> button.

- The input selection screen is displayed.

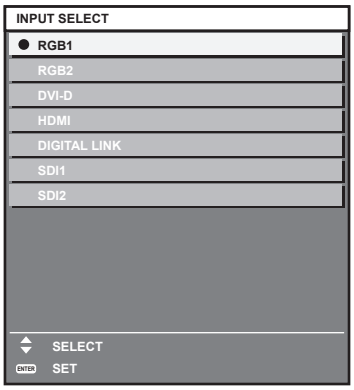

2) Press the <INPUT MENU> button again.

- The input will switch each time you press the <INPUT MENU> button.

Note

- Input can be switched by selecting the input to project by pressing ▲▼ and pressing the <ENTER> button while the input selection screen is displayed.
- The **[P IN P MODE]** screen is displayed when the <INPUT MENU> button is pressed while in the P IN P. (➡ page 144)
- If the optional DIGITAL LINK output supported device (Model No.: ET-YFB100G, ET-YFB200G) is connected to the projector, the input selection menu for the DIGITAL LINK output supported device is displayed when the <ENTER> button is pressed while the DIGITAL LINK input is selected in the input selection screen.
- If the optional DIGITAL LINK output supported device (Model No.: ET-YFB100G, ET-YFB200G) is connected to the projector, the DIGITAL LINK logo and the input name selected in the DIGITAL LINK output supported device are displayed in the display section of the [DIGITAL LINK] in the input selection screen.
- Configure [RGB1 INPUT SETTING] of the [DISPLAY OPTION] menu → [RGB IN] (➡ page 113) to match the signal to be input to the <RGB 1 IN> terminal.

Using the shutter function

If the projector is not used for a certain period of time during the meeting intermission, for example, it is possible to turn off the image temporarily.

SHUTTER button

1) Press the <SHUTTER> button.

- The image disappears.
- This operation can be also performed using the <SHUTTER> button on the control panel.

2) Press the <SHUTTER> button again.

- The image is displayed.

Note

- The power indicator <ON (G)/STANDBY (R)> will blink slowly in green while the shutter function is in use (shutter: closed).
- You can set the speed of shutter opening/closing via the [DISPLAY OPTION] menu → [SHUTTER SETTING].

Using the on-screen display function

Turn off the on-screen display function (no display) when you do not wish the viewers to see the on-screen display, such as the menu or the input terminal name.

ON SCREEN button

1) Press the <ON SCREEN> button.

- The on-screen display disappears.

2) Press the <ON SCREEN> button again.

- The on-screen display appears.

Note

- If you press the <MENU> button on the control panel for at least three seconds while the on-screen display is off (hidden), the on-screen display is turned on.

Using the automatic setup function

The automatic setup function can be used to automatically adjust the resolution, clock phase, and image position when analog RGB signals consisting of dots such as computer signals are being input, or to automatically adjust the image position when DVI-D/HDMI signals are input. It is recommended to input an image with bright white borders at the edges and high-contrast black and white characters when the automatic setup is being performed. Avoid using images that include halftones or gradation, such as photographs and computer graphics.

AUTO SETUP button

1) Press the <AUTO SETUP> button.

- [COMPLETE] is displayed when it has completed without any problem.
- This operation can be also performed using the <AUTO SETUP> button on the control panel.

Note

- The clock phase may shift even if it has completed without any incident. In such cases, adjust the [POSITION] menu → [CLOCK PHASE] (➡ page 93).
- If an image with blurred edges or a dark image is input, [INCOMPLETE] may appear or adjustment may not be performed properly even when [COMPLETE] appears. In this case, adjust the settings in the [ADVANCED MENU] menu → [INPUT RESOLUTION] (➡ page 97), [POSITION] → [CLOCK PHASE] (➡ page 93), and [SHIFT] (➡ page 91).
- Adjust special signals according to the [DISPLAY OPTION] menu → [AUTO SETUP] (➡ page 110).
- Automatic adjustment may not work depending on the model of the computer.
- Automatic adjustment may not work for a synchronization signal of C-SY or SYNC ON GREEN.
- Images may be disrupted for a few seconds during automatic adjustment, but it is not a malfunction.
- Adjustment is required for each input signal.
- Automatic adjustment can be canceled by pressing the <MENU> button during the automatic adjustment operation.
- Even if a signal possible to perform the automatic setup is being input, it may not be able to adjust correctly if the automatic setup function is used while the moving image is being input. [INCOMPLETE] may be displayed, or the adjustment may not be completed correctly even if [COMPLETE] is displayed.

Switching the image aspect ratio

Switch the image aspect ratio according to the input.

ASPECT button

1) Press the <ASPECT> button.

- The setting will change each time you press the button.

Note

- Refer to the [POSITION] menu → [ASPECT] (➡ page 91) for details.

Using the function button

The <FUNCTION> button of the remote control can be used as a simplified shortcut button by assigning the following functions: [P IN P], [SUB MEMORY], [SYSTEM SELECTOR], [SYSTEM DAYLIGHT VIEW], [FREEZE], [WAVEFORM MONITOR], [LENS MEMORY LOAD], [LEFT/RIGHT SWAP], [PROJECTION METHOD]

FUNCTION button

1) Press the <FUNCTION> button.

Note

- [LEFT/RIGHT SWAP] can be assigned only for PT-DZ21K2, PT-DS20K2.
- Assignment of the function is performed from the [PROJECTOR SETUP] menu → [FUNCTION BUTTON] (➡ page 139).

Displaying internal test pattern

The projector has eight types of internal test patterns to check the condition of the projector body. To display test patterns, perform the following steps.

TEST PATTERN button

1) Press the <TEST PATTERN> button.

2) Press ◀▶ to select the test pattern.

Note

- Setting is also available from the [TEST PATTERN] (➡ page 146) menu.
- Settings of position, size, and other factors will not be reflected in test patterns. Make sure to display the input signal before performing various adjustments.

Using the status function

Display the status of the projector.

STATUS button

1) Press the <STATUS> button.

- The **[STATUS]** screen is displayed.

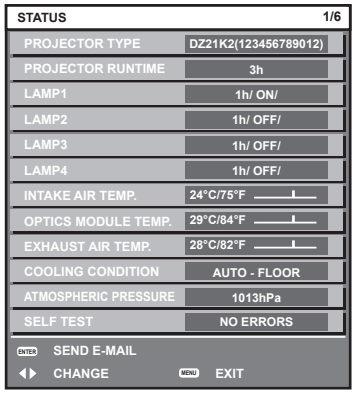

Note

- This can be displayed from the [PROJECTOR SETUP] menu → [STATUS] (➡ page 137).

Using the AC voltage monitor function

The value of input supply voltage can be displayed on the self-diagnosis display at the side of the projector.

■ To display during projection

1) Press the power on <|> button.

- The value of the input supply voltage is displayed only as numeric value on the self-diagnosis display.
- The display will turn off automatically after approximately 3 seconds.

■ To display during standby mode

1) Press the power standby <⏻> button.

- The value of the input supply voltage is displayed only as numeric value on the self-diagnosis display.
- The display will turn off automatically after approximately 3 seconds.

Note

- It can be set using the [PROJECTOR SETUP] menu → [AC VOLTAGE MONITOR] (➡ page 138).
- The value of input supply voltage cannot be displayed in the self-diagnosis display during standby mode when the [PROJECTOR SETUP] menu → [STANDBY MODE] (➡ page 133) is set to [ECO].
- Operation can also be performed by the power on <|> button or power standby <⏻> button on the control panel.

Setting ID number of the remote control

When you use the system with multiple projectors, you can operate all the projectors simultaneously or each projector individually using single remote control, if a unique ID number is assigned to each projector.

After setting the ID number of the projector, set same ID number on the remote control.

The factory default ID number of the projector is set to [ALL]. When using a single projector, press the <ID ALL> button on the remote control. Also, you can control a projector by pressing the <ID ALL> button on the remote control even if you do not know the projector ID.

ID ALL ID SET button

1) Press the <ID SET> button on the remote control.

2) Within five seconds, press and set the one-digit or two-digit ID number set on the projector body using the number (<0> - <9>) buttons.

- If you press the <ID ALL> button, you can control the projectors regardless of the ID number setting of the projector body.

Attention

- Since the ID number of the remote control can be set without the projector body, do not press the <ID SET> button on the remote control carelessly. If the <ID SET> button is pressed and no number (<0> - <9>) buttons are pressed within five seconds, the ID number returns to its original value before the <ID SET> button was pressed.
- The ID number set on the remote control will be stored unless it is set again. However, it will be erased if the remote control is left with dead batteries. Set the same ID number again when the batteries are replaced.

Note

- When the ID number of the remote control is set to [0], you can control the projector regardless of the ID number setting of the projector body, as same as when [ALL] is set.
- Set the ID number of the projector body from the [PROJECTOR SETUP] menu → [PROJECTOR ID].

Chapter 4 Settings

This chapter describes the settings and adjustments you can make using the on-screen menu.

Menu navigation

The on-screen menu (Menu) is used to perform various settings and adjustments of the projector.

Navigating through the menu

Operating procedure

MENU **button**

1) **Press the <MENU> button on the remote control or control panel.**
   - The **[MAIN MENU]** screen is displayed.

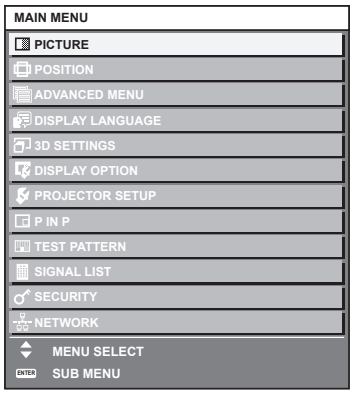

2) **Press ▲▼ to select an item from the main menu.**
   - The selected item is highlighted in yellow.

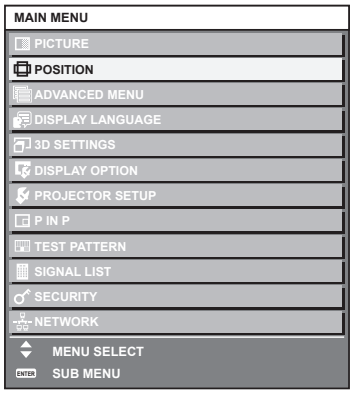

3) **Press the <ENTER> button.**
   - The sub-menu items of the selected main menu are displayed.

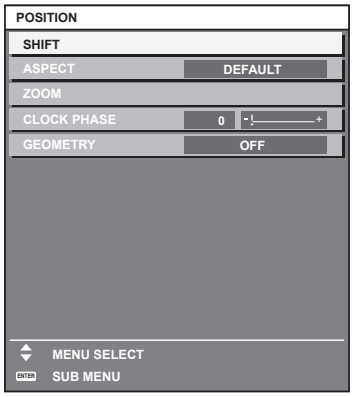

4) Press ▲▼ to select a sub-menu, and press ◀▶ or the <ENTER> button to change or adjust settings.

- Some items will switch in order as follows each time you press ◀▶.

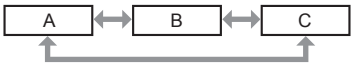

- For some items, press ◀▶ to display an individual adjustment screen with a bar scale as shown below.

Note

- Pressing the <MENU> button while the menu screen is displayed returns to the previous menu.
- Depending on the signals to be input to the projector, some items or functions may not be adjusted or used. When the items cannot be adjusted or used, the items in the menu screen are shown in black characters, and they cannot be adjusted or set. [DIGITAL CINEMA REALITY] and [FRAME LOCK] may not be displayed depending on the input signal.
- Some items can be adjusted even if signals are not input.
- Individual adjustment screen is cleared automatically if no operation is performed for approximately five seconds.
- For menu items, refer to “Main menu” (➡ page 78) and “Sub-menu” (➡ page 79).
- The cursor color depends on the settings of the [DISPLAY OPTION] menu → [ON-SCREEN DISPLAY] → [OSD DESIGN]. The selected item is displayed with the yellow cursor by the factory default.
- In the portrait setting, the on-screen menu is displayed sideways.
  To display the on-screen menu in portrait, go to the [DISPLAY OPTION] menu → [ON-SCREEN DISPLAY] (➡ page 119) and change the [OSD ROTATION] setting.
  (Only for PT-DZ21K2, PT-DS20K2, PT-DW17K2)

Resetting adjustment values to the factory default

If the <DEFAULT> button on the remote control is pressed, the values adjusted in the menu items are restored to the factory default settings.

DEFAULT button

1) Press the <DEFAULT> button on the remote control.

Note

- You cannot reset all the settings to the factory default at a time.
- To reset all the settings adjusted in the sub-menu item to the factory default one at a time, execute the [PROJECTOR SETUP] menu → [INITIALIZE] (➡ page 143).
- Some items cannot be reset to the factory default settings even when the <DEFAULT> button on the remote control is pressed. Adjust those items individually.
- The triangular mark under the bar scale in the individual adjustment screen indicates the factory default setting. The position of the triangular mark varies according to the selected input signals.

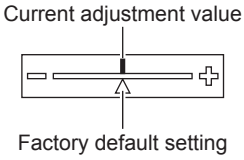

Main menu

The following items are in the main menu.
When a main menu item is selected, the screen changes to a sub-menu selection screen.

Main menu item		Page
	[PICTURE]	83
	[POSITION]	91
	[ADVANCED MENU]	96
	[DISPLAY LANGUAGE]	102

Main menu item		Page
	[3D SETTINGS]*1	103
	[DISPLAY OPTION]	108
	[PROJECTOR SETUP]	126
	[P IN P]	144
	[TEST PATTERN]	146
	[SIGNAL LIST]	147
	[SECURITY]	150
	[NETWORK]	154

*1 Only for PT-DZ21K2, PT-DS20K2

Sub-menu

The sub-menu of the selected main menu item is displayed, and you can set and adjust items in the sub-menu.

[PICTURE]

Sub-menu item	Factory default	Page
[PICTURE MODE]	[STANDARD]*1	83
[CONTRAST]	[0]*2	83
[BRIGHTNESS]	[0]*2	84
[COLOR]	[2]*2	84
[TINT]	[-2]*2	84
[COLOR TEMPERATURE]	[DEFAULT]*2	84
[GAMMA]	[DEFAULT]*2	86
[SYSTEM DAYLIGHT VIEW]	[OFF]*2	87
[SHARPNESS]	[8]*2	87
[NOISE REDUCTION]	[2]*2	88
[DYNAMIC IRIS]	[2]*2	88
[SYSTEM SELECTOR]	[YP_BP_R]*1	89

*1 Depends on the signal input.
*2 Depends on the [PICTURE MODE].

[POSITION]

Sub-menu item	Factory default	Page
[SHIFT]	—	91
[ASPECT]	[DEFAULT]*1	91
[ZOOM]	—	92
[CLOCK PHASE]	[0]*1	93
[GEOMETRY]	[OFF]	93

*1 Depends on the signal input.

[ADVANCED MENU]

Sub-menu item	Factory default	Page
[DIGITAL CINEMA REALITY]	[AUTO]*1	96
[BLANKING]	—	96
[INPUT RESOLUTION]	—	97

Sub-menu item	Factory default	Page
[CLAMP POSITION]	[24]*1	97
[EDGE BLENDING]	[OFF]	98
[FRAME RESPONSE]	[NORMAL]	99
[FRAME CREATION]	[2]	100
[FRAME LOCK]*2	—	100
[RASTER POSITION]	—	101

*1 Depends on the signal input.
*2 Only for PT-DZ21K2, PT-DS20K2

Note

- Sub-menu items and factory default settings vary depending on the selected input terminal.

[DISPLAY LANGUAGE]

Details (➡ page 102)

[3D SETTINGS]

(Only for PT-DZ21K2, PT-DS20K2)

Sub-menu item	Factory default	Page
[3D SYSTEM SETTING]	[SINGLE]	103
[3D SYNC SETTING]	—	103
[3D INPUT FORMAT]	[AUTO]*1	104
[LEFT/RIGHT SWAP]	[NORMAL]	104
[3D COLOR MATCHING]	[SHARED 2D/3D]	104
[3D PICTURE BALANCE]	—	105
[DARK TIME SETTING]	[1.5ms]	105
[3D FRAME DELAY]	[0us]	106
[3D TEST MODE]	[NORMAL]	106
[3D TEST PATTERN]	—	106
[SAFETY PRECAUTIONS MESSAGE]	[ON]	107
[3D SAFETY PRECAUTIONS]	—	107

*1 Varies depending on the selected input terminal.

[DISPLAY OPTION]

Sub-menu item	Factory default	Page
[COLOR MATCHING]	[OFF]	108
[LARGE SCREEN CORRECTION]	[OFF]	109
[SCREEN SETTING]*1	—	109
[AUTO SIGNAL]	[OFF]	110
[AUTO SETUP]	—	110
[BACKUP INPUT SETTING]	—	111
[SIMUL INPUT SETTING]	—	112
[RGB IN]	—	113
[DVI-D IN]	—	114
[HDMI IN]	—	115
[DIGITAL LINK IN]	—	117
[SDI IN]*1	—	118
[ON-SCREEN DISPLAY]	—	119
[IMAGE ROTATION]	[OFF]	121
[BACK COLOR]	[BLUE]	121
[STARTUP LOGO]	[DEFAULT LOGO]	121
[UNIFORMITY]	—	122
[SHUTTER SETTING]	—	122
[FREEZE]	—	123

Sub-menu item	Factory default	Page
[WAVEFORM MONITOR]	[OFF]	123
[CUT OFF]	—	125

*1 Only for PT-DZ21K2, PT-DS20K2, PT-DZ16K2

[PROJECTOR SETUP]

Sub-menu item	Factory default	Page
[PROJECTOR ID]	[ALL]	126
[PROJECTION METHOD]	[FRONT/FLOOR]	126
[LAMP SELECT]	[QUAD]	126
[LAMP RELAY]	[OFF]	127
[BRIGHTNESS CONTROL]	—	128
[STANDBY MODE]	[NORMAL]	133
[SCHEDULE]	[OFF]	133
[INITIAL STARTUP]	[LAST MEMORY]	135
[STARTUP INPUT SELECT]	[LAST USED]	135
[RS-232C]	—	135
[STATUS]	—	137
[AC VOLTAGE MONITOR]	[OFF]	138
[NO SIGNAL SHUT-OFF]	[DISABLE]	138
[REMOTE2 MODE]	[DEFAULT]	139
[FUNCTION BUTTON]	—	139
[DATE AND TIME]	—	139
[LENS CALIBRATION]	—	140
[LENS MEMORY]	—	141
[SAVE ALL USER DATA]	—	142
[LOAD ALL USER DATA]	—	143
[INITIALIZE]	—	143
[SERVICE PASSWORD]	—	143

[P IN P]

Details (➡ page 144)

[TEST PATTERN]

Details (➡ page 146)

[SIGNAL LIST]

Details (➡ page 147)

[SECURITY]

Sub-menu item	Factory default	Page
[SECURITY PASSWORD]	[OFF]	150
[SECURITY PASSWORD CHANGE]	—	150
[DISPLAY SETTING]	[OFF]	150
[TEXT CHANGE]	—	151
[CONTROL DEVICE SETUP]	—	151
[CONTROL DEVICE PASSWORD CHANGE]	—	152

[NETWORK]

Sub-menu item	Factory default	Page
[DIGITAL LINK MODE]	[AUTO]	154
[DIGITAL LINK SETUP]	—	154
[DIGITAL LINK STATUS]	—	155
[NETWORK SETUP]	—	155
[NETWORK CONTROL]	—	156
[NETWORK STATUS]	—	156
[DIGITAL LINK MENU]	—	157
[Art-Net SETUP]	[OFF]	157
[Art-Net CHANNEL SETTING]	[2]	157
[Art-Net STATUS]	—	158

Note

- Some items may not be adjusted or used for certain signal formats to be input to the projector.
  When the items cannot be adjusted or used, the items in the menu screen are shown in black characters, and they cannot be adjusted or set.
- Sub-menu items and factory default settings vary depending on the selected input terminal.

[PICTURE] menu

On the menu screen, select [PICTURE] from the main menu, and select an item from the sub-menu. Refer to "Navigating through the menu" (➡ page 77) for the operation of the menu screen.

[PICTURE MODE]

You can switch to the desired picture mode suitable for the image source and the environment in which the projector is used.

1) **Press ▲▼ to select [PICTURE MODE].**

2) **Press ◀▶.**
   - The **[PICTURE MODE]** individual adjustment screen is displayed.

3) **Press ◀▶ to switch the item.**
   - The items will switch each time you press the button.

[STANDARD]	The image becomes suitable for moving images in general.
[CINEMA]	The image becomes suitable for movie contents.
[NATURAL]	The image is sRGB compliant.
[DICOM SIM.]	The image becomes similar to that of DICOM Part 14 Grayscale Standard.
[DYNAMIC]	The light output is maximized for use in bright areas.
[GRAPHIC]	The image becomes suitable for input from the personal computer.
[USER]	Set any desired picture mode.

Note

- The factory default picture mode is [GRAPHIC] for still image input signals and [STANDARD] for movie-based input signals.
- DICOM is an abbreviation of "Digital Imaging and COmmunication in Medicine" and is a standard for medical imaging devices. Although the DICOM name is used, the projector is not a medical device, and should not be used for purposes such as diagnosis of display images.
- Press the <ENTER> button when each [PICTURE MODE] is selected to save as a specified value when a new signal is input. The data of all items except [SYSTEM SELECTOR] in the [PICTURE] menu is saved.
- In the factory default settings, [USER] is set to images that comply with the ITU-R BT.709 standard.

Changing the [USER] name

1) **Press ▲▼ to select [PICTURE MODE].**

2) **Press ◀▶ to select [USER].**

3) **Press the <ENTER> button.**
   - The **[PICTURE MODE]** detailed screen is displayed.

4) **Press ▲▼ to select [PICTURE MODE NAME CHANGE], and press the <ENTER> button.**
   - The **[PICTURE MODE NAME CHANGE]** screen is displayed.

5) **Press ▲▼◀▶ to select the text, and press the <ENTER> button to enter the text.**

6) **Press ▲▼◀▶ to select [OK], and press the <ENTER> button.**
   - The picture mode name is changed.

[CONTRAST]

You can adjust the contrast of the colors.

1) **Press ▲▼ to select [CONTRAST].**

2) **Press ◀▶ or the <ENTER> button.**
   - The **[CONTRAST]** individual adjustment screen is displayed.

3) **Press ◀▶ to adjust the level.**

Operation	Adjustment	Range of adjustment
Press ▶.	The screen becomes brighter.	–31 - +31
Press ◀.	The screen becomes darker.	

Attention

- Adjust [BRIGHTNESS] first when you need to adjust the black level.

[BRIGHTNESS]

You can adjust the dark (black) part of the projected image.

1) **Press ▲▼ to select [BRIGHTNESS].**

2) **Press ◀▶ or the <ENTER> button.**
   - The **[BRIGHTNESS]** individual adjustment screen is displayed.

3) **Press ◀▶ to adjust the level.**

Operation	Adjustment	Range of adjustment
Press ▶.	Increases the brightness of the dark (black) parts of the screen.	–31 - +31
Press ◀.	Reduces the brightness of the dark (black) parts of the screen.	

[COLOR]

You can adjust the color saturation of the projected image.

1) **Press ▲▼ to select [COLOR].**

2) **Press ◀▶ or the <ENTER> button.**
   - The **[COLOR]** individual adjustment screen is displayed.

3) **Press ◀▶ to adjust the level.**

Operation	Adjustment	Range of adjustment
Press ▶.	Deepens colors.	–31 - +31
Press ◀.	Weakens colors.	

[TINT]

You can adjust the skin tone in the projected image.

1) **Press ▲▼ to select [TINT].**

2) **Press ◀▶ or the <ENTER> button.**
   - The **[TINT]** individual adjustment screen is displayed.

3) **Press ◀▶ to adjust the level.**

Operation	Adjustment	Range of adjustment
Press ▶.	Adjusts skin tone toward greenish color.	–31 - +31
Press ◀.	Adjusts skin tone toward reddish purple.	

[COLOR TEMPERATURE]

You can switch the color temperature if the white areas of the projected image are bluish or reddish.

Adjusting with color temperature

1) **Press ▲▼ to select [COLOR TEMPERATURE].**

2) **Press ◀▶ or the <ENTER> button.**
   - The **[COLOR TEMPERATURE]** individual adjustment screen is displayed.

3) **Press ◀▶ to switch the item.**
   - The items will switch each time you press the button.

[DEFAULT]	Factory default setting.

[USER1]	Adjusts white balance as desired. Refer to “Adjusting desired white balance” (➡ page 85) for details.
[USER2]	
[3200K] - [9300K]	Allows you to set in increments of 100 K. Select so that images become natural.

Note

- When [PICTURE MODE] (➡ page 83) is set to [USER] or [DICOM SIM.], [DEFAULT] cannot be selected.
- When [COLOR MATCHING] (➡ page 108) adjustment is set to other than [OFF], [COLOR TEMPERATURE] is fixed to [USER1].
- The color temperature numerical values are guidelines.

Adjusting desired white balance

1) **Press ▲▼ to select [COLOR TEMPERATURE].**

2) **Press ◀▶ or the <ENTER> button.**
   - The **[COLOR TEMPERATURE]** individual adjustment screen is displayed.

3) **Press ◀▶ to select [USER1] or [USER2].**

4) **Press the <ENTER> button.**
   - The **[COLOR TEMPERATURE]** screen is displayed.

5) **Press ▲▼ to select [WHITE BALANCE].**

6) **Press the <ENTER> button.**
   - The **[WHITE BALANCE]** screen is displayed.

7) **Press ▲▼ to select [WHITE BALANCE HIGH] or [WHITE BALANCE LOW].**

8) **Press the <ENTER> button.**
   - The **[WHITE BALANCE HIGH]** screen or the **[WHITE BALANCE LOW]** screen is displayed.

9) **Press ▲▼ to select [RED], [GREEN], or [BLUE].**

10) **Press ◀▶ to adjust the level.**

Item	Operation	Adjustment	Range of adjustment
[RED]	Press ▶.	Deepens red.	[WHITE BALANCE HIGH]: 0 - +255 (factory default is +255) [WHITE BALANCE LOW]: –127 - +127 (factory default is 0)
	Press ◀.	Weakens red.	
[GREEN]	Press ▶.	Deepens green.	
	Press ◀.	Weakens green.	
[BLUE]	Press ▶.	Deepens blue.	
	Press ◀.	Weakens blue.	

Note

- Adjust [COLOR TEMPERATURE] correctly. All colors will not be displayed properly unless adequate adjustment is made. If the adjustment does not look suitable, you can press the <DEFAULT> button on the remote control to return the setting for the selected item only to the factory default setting.

Adjusting desired white balance based on existing color temperature settings

1) **Press ▲▼ to select [COLOR TEMPERATURE].**

2) **Press ◀▶ or the <ENTER> button.**
   - The **[COLOR TEMPERATURE]** individual adjustment screen is displayed.

3) **Press ◀▶ to select an item other than [DEFAULT], [USER1], and [USER2].**

4) **Press the <ENTER> button.**
   - The **[CHANGE TO *****]** screen is displayed.

5) **Press ▲▼ to select [USER1] or [USER2].**
   - The status of the color temperature changed is saved to the selected item.

6) **Press the <ENTER> button.**
- The confirmation screen is displayed.

7) **Press ◀▶ to select [OK], and press the <ENTER> button.**
- The [USER1] or [USER2] data is overwritten.
- If you press ◀▶ to select [CANCEL] and then press the <ENTER> button, the data will not be overwritten.
- The **[WHITE BALANCE HIGH]** screen is displayed.

8) **Press ▲▼ to select [RED], [GREEN], or [BLUE].**

9) **Press ◀▶ to adjust the level.**

Note

- Adjust [COLOR TEMPERATURE] correctly. All colors will not be displayed properly unless adequate adjustment is made. If the adjustment does not look suitable, you can press the <DEFAULT> button on the remote control to return the setting for the selected item only to the factory default setting.
- When color temperature has been changed, the colors before and after the change will differ slightly.

Changing the name of [USER1] or [USER2]

1) **Press ▲▼ to select [COLOR TEMPERATURE].**

2) **Press ◀▶ or the <ENTER> button.**
- The **[COLOR TEMPERATURE]** individual adjustment screen is displayed.

3) **Press ◀▶ to select [USER1] or [USER2].**

4) **Press the <ENTER> button.**
- The **[COLOR TEMPERATURE]** screen is displayed.

5) **Press ▲▼ to select [COLOR TEMPERATURE NAME CHANGE].**

6) **Press the <ENTER> button.**
- The **[COLOR TEMPERATURE NAME CHANGE]** screen is displayed.

7) **Press ▲▼◀▶ to select the text, and press the <ENTER> button to enter the text.**

8) **Press ▲▼◀▶ to select [OK], and press the <ENTER> button.**
- The name set to color temperature is changed.

Note

- When a name is changed, display of [USER1], [USER2] is also changed.

[GAMMA]

You can switch gamma mode.

1) **Press ▲▼ to select [GAMMA].**

2) **Press ◀▶ or the <ENTER> button.**
- The **[GAMMA]** individual adjustment screen is displayed.

3) **Press ◀▶ to switch the item.**
- The items will switch each time you press the button.

[DEFAULT][*1]	Factory default setting.
[USER1]	Allows you to change the name. Refer to “Changing the name of [USER1] or [USER2]” (➡ page 87) for details.
[USER2]	
[DICOM SIM.]	The picture becomes similar to that of DICOM standard.
[1.0]	Set so that images become as you like. [2.0] - [2.8] can be set in increments of 0.1.
[1.8]	
[2.0] - [2.8]	

*1 When [PICTURE MODE] is set to [DYNAMIC], [USER], or [DICOM SIM.], [DEFAULT] cannot be selected.

Note

- DICOM is an abbreviation of “Digital Imaging and COmmunication in Medicine” and is a standard for medical imaging devices. Although the DICOM name is used, the projector is not a medical device, and should not be used for purposes such as diagnosis of display images.

Changing the name of [USER1] or [USER2]

1) **Press ▲▼ to select [GAMMA].**

2) **Press ◀▶ or the <ENTER> button.**
   - The **[GAMMA]** individual adjustment screen is displayed.

3) **Press ◀▶ to select [USER1] or [USER2].**

4) **Press the <ENTER> button.**
   - The **[GAMMA]** screen is displayed.

5) **Press the <ENTER> button.**
   - The **[GAMMA NAME CHANGE]** screen is displayed.

6) **Press ▲▼◀▶ to select the text, and press the <ENTER> button to enter the text.**

7) **Press ▲▼◀▶ to select [OK], and press the <ENTER> button.**
   - The selected gamma name is changed.

Note

- When a name is changed, display of [USER1], [USER2] is also changed.

[SYSTEM DAYLIGHT VIEW]

You can correct the image to the optimal vividness even if it is projected under a bright light.

1) **Press ▲▼ to select [SYSTEM DAYLIGHT VIEW].**

2) **Press ◀▶ or the <ENTER> button.**
   - The **[SYSTEM DAYLIGHT VIEW]** individual adjustment screen is displayed.

3) **Press ◀▶ to switch the item.**
   - The items will switch each time you press the button.

[OFF]	No correction.
[1] - [6]	Corrects the vividness of the image. The larger the value, the stronger the correction.

[SHARPNESS]

You can adjust the sharpness of the projected image.

1) **Press ▲▼ to select [SHARPNESS].**

2) **Press ◀▶ or the <ENTER> button.**
   - The **[SHARPNESS]** individual adjustment screen is displayed.

3) **Press ◀▶ to adjust the level.**

Operation	Adjustment	Range of adjustment
Press ▶.	Contours become sharper.	0 - +15
Press ◀.	Contours become softer.	

Note

- If you press ▶ while the adjustment value is [+15], the value will become [0]. If you press ◀ while the adjustment value is [0], the value will become [+15].

[NOISE REDUCTION]

You can reduce noises when the input image is degraded and noise is occurring in the image signal.

1) **Press ▲▼ to select [NOISE REDUCTION].**

2) **Press ◀▶ or the <ENTER> button.**
   - The **[NOISE REDUCTION]** individual adjustment screen is displayed.

3) **Press ◀▶ to switch the item.**
   - The items will switch each time you press the button.

[OFF]	No correction.
[1]	Slightly corrects the noise.
[2]	Moderately corrects the noise.
[3]	Strongly corrects the noise.

Attention

- When this is set for an input signal with less noise, the image may look different from what it originally was. In such a case, set it to [OFF].

[DYNAMIC IRIS]

Aperture correction and signal compensation are performed automatically based on the image to result in an image of optimum contrast.

1) **Press ▲▼ to select [DYNAMIC IRIS].**

2) **Press ◀▶ or the <ENTER> button.**
   - The **[DYNAMIC IRIS]** individual adjustment screen is displayed.

3) **Press ◀▶ to switch the item.**
   - The items will switch each time you press the button.

[OFF]	No correction.
[1]	Slightly corrects aperture and compensate signals.
[2]	Moderately corrects aperture and signal.
[3]	Strongly corrects aperture and signal.
[USER]	Set any desired correction. Refer to “Adjusting desired correction amount” (➡ page 88) for details.

Adjusting desired correction amount

1) **Press ▲▼ to select [DYNAMIC IRIS].**

2) **Press ◀▶ or the <ENTER> button.**
   - The **[DYNAMIC IRIS]** individual adjustment screen is displayed.

3) **Press ◀▶ to select [USER].**

4) **Press the <ENTER> button.**
   - The **[DYNAMIC IRIS]** screen is displayed.

5) **Press ▲▼ to select [AUTO IRIS], [MANUAL IRIS], or [DYNAMIC GAMMA].**

6) **Press ◀▶ to adjust the correction amount.**

Item		Adjustment
[AUTO IRIS] (Automatic adjustment of aperture)	**[OFF]**	No correction.
	[1] - [255]	Allows you to set in increments of 1. The larger the value, the stronger the correction.
[MANUAL IRIS] (Fixed adjustment of aperture)	**[OFF]**	No correction.
	[1] - [255]	Allows you to set in increments of 1. The larger the value, the stronger the correction.

Item		Adjustment
[DYNAMIC GAMMA] (Adjustment of signal compensation)	**[OFF]**	No correction.
	[1]	Slightly compensates the signal.
	[2]	Moderately compensates the signal.
	[3]	Strongly compensates the signal.

Note

- When [DYNAMIC GAMMA] is set to [3], the contrast will be maximized.
- Brightness control and dynamic iris operate simultaneously, but the iris is fully open and does not operate while the brightness is being measured.

[SYSTEM SELECTOR]

The projector will automatically detect the input signal, but you can set the system method manually when an unstable signal is input. Set the system method matching the input signal.

1) Press ▲▼ to select [SYSTEM SELECTOR].

2) Press the <ENTER> button.

3) Press ▲▼ to select a system format.

- Select system method with ▲▼◀▶ when the signal is input by connecting to the <SDI IN> terminal or the <SDI IN 1>/<SDI IN 2> terminal. (Only for PT-DZ21K2, PT-DS20K2, PT-DZ16K2)
- Available system formats vary depending on the input signal.

Terminal	System format	
<R/P_R/VIDEO> terminal, <G/Y>/<B/P_B/C> terminal	Select [AUTO], [NTSC], [NTSC4.43], [PAL], [PAL-M], [PAL-N], [SECAM], or [PAL60]. Set it to [AUTO] normally. (Setting [AUTO] will automatically select [NTSC], [NTSC4.43], [PAL], [PAL-M], [PAL-N], [SECAM], or [PAL60].) Switch the setting to the signal method for the TV used.	
<RGB 1 IN> terminal, <RGB 2 IN> terminal	**480i, 576i, or 576p signal**	Select [RGB] or [YC_BC_R].
	VGA60 or 480p signal	Select [VGA60], [480p YC_BC_R], or [480p RGB].
	Other movie-based signals	Select [RGB] or [YP_BP_R].
<DVI-D IN> terminal	**480i, 576i, 480p, or 576p signal**	Select [RGB] or [YC_BC_R].
	Other movie-based signals	Select [RGB] or [YP_BP_R].
<HDMI IN> terminal, <DIGITAL LINK/LAN> terminal	**480i, 576i, 480p, or 576p signal**	Select [AUTO], [RGB], or [YC_BC_R].
	Other movie-based signals	Select [AUTO], [RGB], or [YP_BP_R].
<SDI IN 1> terminal, <SDI IN 2> terminal (Only for PT-DZ21K2, PT-DS20K2)	**For single link**	Select [AUTO], [480i YC_BC_R], [576i YC_BC_R], [720/50p YP_BP_R], [720/60p YP_BP_R], [1035/60i YP_BP_R], [1080/24p YP_BP_R], [1080/24sF YP_BP_R], [1080/25p YP_BP_R], [1080/30p YP_BP_R], [1080/50i YP_BP_R], [1080/60i YP_BP_R], [1080/50p YP_BP_R], [1080/60p YP_BP_R], [1080/24p RGB], [1080/24sF RGB], [1080/25p RGB], [1080/30p RGB], [1080/50i RGB], or [1080/60i RGB].
	For dual link	Select [AUTO], [1080/24p RGB], [2K/24p RGB], [2K/24p XYZ], [1080/24sF RGB], [2K/24sF RGB], [2K/24sF XYZ], [1080/25p RGB], [1080/30p RGB], [1080/50i RGB], [1080/60i RGB], [1080/50p RGB], [1080/60p RGB], [1080/50p YP_BP_R], [1080/60p YP_BP_R], [2K/48p RGB], [2K/48p YP_BP_R], [2K/50p RGB], [2K/50p YP_BP_R], [2K/60p RGB], or [2K/60p YP_BP_R].
<SDI IN> terminal (Only for PT-DZ16K2)	Select [AUTO], [480i YC_BC_R], [576i YC_BC_R], [720/50p YP_BP_R], [720/60p YP_BP_R], [1035/60i YP_BP_R], [1080/24p YP_BP_R], [1080/24sF YP_BP_R], [1080/25p YP_BP_R], [1080/30p YP_BP_R], [1080/50i YP_BP_R], [1080/60i YP_BP_R], [1080/50p YP_BP_R], [1080/60p YP_BP_R], [1080/24p RGB], [1080/24sF RGB], [1080/25p RGB], [1080/30p RGB], [1080/50i RGB], or [1080/60i RGB].	

4) Press the <ENTER> button.

Note

- Refer to “List of compatible signals” (➡ page 209) for the types of video signals that can be used with the projector.
- This may not function properly for some connected external devices.

sRGB-compliant video

sRGB is an international standard (IEC61966-2-1) for color reproduction defined by IEC (International Electrotechnical Commission).
Set according to the following steps to reproduce more faithful, sRGB compliant colors.

1) Set [COLOR MATCHING] to [OFF].
- Refer to [COLOR MATCHING] (➡ page 108).

2) Display the [PICTURE] menu.
- Refer to “[PICTURE] menu” (➡ page 83).

3) Press ▲▼ to select [PICTURE MODE].

4) Press ◀▶ to set [NATURAL].

5) Press ▲▼ to select [COLOR].

6) Press the <DEFAULT> button on the remote control to set the factory default setting.

7) Follow Steps 5) to 6) to set [TINT], [COLOR TEMPERATURE], [GAMMA], and [SYSTEM DAYLIGHT VIEW] to the factory default settings.

Note

- sRGB is available for RGB signal input only.

[POSITION] menu

On the menu screen, select [POSITION] from the main menu, and select an item from the sub-menu. Refer to "Navigating through the menu" (➡ page 77) for the operation of the menu screen.

Note

- When the optional DIGITAL LINK output supported device (Model No.: ET-YFB100G, ET-YFB200G) is connected to the <DIGITAL LINK/LAN> terminal, adjust the shift, aspect, and clock phase from the menu of DIGITAL LINK output supported device at first.

[SHIFT]

Move the image position vertically or horizontally if the image projected on the screen is still out of position even when the positions of the projector and screen are correct.

1) Press ▲▼ to select [SHIFT].

2) Press the <ENTER> button.

- The **[SHIFT]** screen is displayed.

3) Press ▲▼◀▶ to adjust the position.

Orientation	Operation	Adjustment	
Vertical (up and down) adjustment	Press ▲.	The image position moves up.	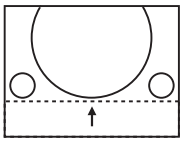
	Press ▼.	The image position moves down.	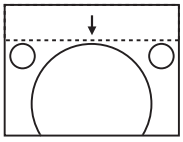
Horizontal (right and left) adjustment	Press ▶.	The image position moves to the right.	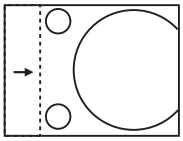
	Press ◀.	The image position moves to the left.	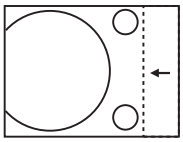

Note

- For the portrait setting, image position is moved horizontally when "Vertical (up and down) adjustment" is made. Image position is moved vertically when "Horizontal (right and left) adjustment" is made.
  (Only for PT-DZ21K2, PT-DS20K2, PT-DW17K2)

[ASPECT]

You can switch the aspect ratio of the image.
The aspect ratio is switched within the screen range selected in [SCREEN SETTING]. Set [SCREEN SETTING] first. (➡ page 109)

1) Press ▲▼ to select [ASPECT].

2) Press ◀▶ or the <ENTER> button.

- The **[ASPECT]** individual adjustment screen is displayed.

3) Press ◀▶ to switch the item.

- The items will switch each time you press the button.

[DEFAULT]	Displays images without changing the aspect ratio of the input signals.

[VID AUTO]*1	The projector identifies the video ID (VID) embedded in the video signals and displays the image by automatically switching the screen sizes between 4:3 and 16:9. This function is effective for NTSC signals.
[AUTO]*2	The projector identifies the video ID (VID) embedded in the video signals and displays the image by automatically switching the screen sizes between 4:3 and 16:9. This function is effective for 480i/480p signals.
[THROUGH]	Displays images without changing the resolution of the input signals.
[16:9]	Displays images with the aspect ratio converted to 16:9 when standard signals are input*3. When wide-screen signals are input*4, the images are displayed without changing the aspect ratio.
[4:3]	Displays images without changing the aspect ratio when standard signals are input*3. When wide-screen signals are input*4, and [4:3] is selected in [SCREEN FORMAT], the images are displayed by converting the aspect ratio to 4:3. When anything other than [4:3] is selected in [SCREEN FORMAT], the images are reduced to be displayed without changing input aspect ratio so that the images will fit in the 4:3 screen.
[H FIT]	Displays images using the entire width of the screen range selected in [SCREEN FORMAT]. When signals have the aspect ratio vertically longer than the screen aspect ratio selected in [SCREEN FORMAT], the images are displayed with the top and bottom parts cut off.
[V FIT]	Displays images using the entire height of the screen range selected in [SCREEN FORMAT]. When signals have the aspect ratio horizontally longer than the aspect ratio of the screen selected in [SCREEN FORMAT], the images are displayed with the right and left parts cut off.
[HV FIT]	Displays images in the entire screen range selected in [SCREEN FORMAT]. When the aspect ratio of the input signals differs from that of the screen range, the images are displayed with the aspect ratio converted to that of the screen selected in [SCREEN FORMAT].

*1 During video signals and Y/C signal (NTSC) input only
*2 During RGB signal (480i, 480p) input
*3 Standard signals are input signals with an aspect ratio of 4:3 or 5:4.
*4 Wide-screen signals are input signals with an aspect ratio of 16:10, 16:9, 15:9 or 15:10.

Note

- Some size modes are not available for certain types of input signals. [DEFAULT] cannot be selected for video signal, Y/C signal (NTSC), or RGB (480i, 480p) signal.
- If an aspect ratio which is different from the aspect ratio for the input signals is selected, the images will appear differently from the originals. Be careful of this when selecting the aspect ratio.
- If using the projector in places such as cafes or hotels to display programs for a commercial purpose or for public presentation, note that adjusting the aspect ratio or using the zoom function to change the screen images may be an infringement of the rights of the original copyright owner for that program under copyright protection laws. Take care when using a function of the projector such as the aspect ratio adjustment and zoom function.
- If conventional (normal) 4:3 images which are not wide-screen images are displayed on a wide screen, the edges of the images may not be visible or they may become distorted. Such images should be viewed as with an aspect ratio of 4:3 in the original format intended by the creator of the images.

[ZOOM]

You can adjust the image size.

When [ASPECT] is set to other than [DEFAULT] and [THROUGH]

1) Press ▲▼ to select [ZOOM].

2) Press the <ENTER> button.
- The **[ZOOM]** screen is displayed.

3) Press ▲▼ to select [INTERLOCKED].

4) Press ◀▶ to switch the item.

[OFF]	Sets the [VERTICAL] and [HORIZONTAL] zoom ratio.
[ON]	Uses [BOTH] to set zoom ratio. Image can be enlarged or reduced vertically and horizontally at the same magnification.

5) Press ▲▼ to select [VERTICAL] or [HORIZONTAL].
- If [ON] is selected, select [BOTH].

6) Press ◀▶ to adjust.

Note

- When [ASPECT] is set to [THROUGH], [ZOOM] cannot be adjusted.

When [ASPECT] is set to [DEFAULT]

1) Press ▲▼ to select [ZOOM].

2) Press the <ENTER> button.

- The **[ZOOM]** screen is displayed.

3) Press ▲▼ to select [MODE].

4) Press ◀▶ to switch the item.

[INTERNAL]	Enlarges the size within the aspect range set with [SCREEN FORMAT].
[FULL]	Enlarges or reduces the size using the entire display area set with [SCREEN FORMAT].

5) Press ▲▼ to select [INTERLOCKED].

6) Press ◀▶ to switch the item.

[OFF]	Sets the [VERTICAL] and [HORIZONTAL] zoom ratio.
[ON]	Uses [BOTH] to set zoom ratio. Image can be enlarged or reduced vertically and horizontally at the same magnification.

7) Press ▲▼ to select [VERTICAL] or [HORIZONTAL].

- If [ON] is selected, select [BOTH].

8) Press ◀▶ to adjust.

Note

- When [ASPECT] is not set to [DEFAULT], [MODE] is not displayed.

[CLOCK PHASE]

You can adjust to achieve an optimal image when there is a flickering image or smeared outlines.

1) Press ▲▼ to select [CLOCK PHASE].

2) Press ◀▶ or the <ENTER> button.

- The **[CLOCK PHASE]** individual adjustment screen is displayed.

3) Press ◀▶ to adjust.

- Adjustment value will change between [0] and [+31]. Adjust so that the amount of interference is at a minimum.

Note

- Some signals may not be adjusted.
- Optimal value may not be achieved if the output from the input computer is unstable.
- Optimal value may not be achieved when there is a shift in the total dot numbers.
- [CLOCK PHASE] can be adjusted only when a signal is input to the <RGB 1 IN> terminal or the <RGB 2 IN> terminal.
- [CLOCK PHASE] cannot be adjusted when a digital signal is input.
- If you press ▶ while the adjustment value is [+31], the value will become [0]. If you press ◀ while the adjustment value is [0], the value will become [+31].

[GEOMETRY]

You can correct various types of distortion in a projected image.
Unique image processing technology enables projection of a square image on a special screen shape.

1) Press ▲▼ to select [GEOMETRY].

2) Press ◀▶ to switch the item.

- The items will switch each time you press the button.

[OFF]	Does not perform geometric adjustment.
[KEYSTONE]	Adjusts any trapezoidal distortion in the projected image.
[CORNER CORRECTION]	Adjusts any distortion in the four corners of the projected image.
[CURVED]	Adjusts any curved distortion in the projected image.

[PC-1]*1	Performs geometric adjustment using a computer.
[PC-2]*1	
[PC-3]*1	

*1 Only for PT-DZ21K2, PT-DS20K2
Advanced skills are necessary to use a computer to control geometric adjustment. Consult your dealer. Up to three geometric adjustments performed using the computer can be saved.

Setting [KEYSTONE] or [CURVED]

1) Press ▲▼ to select [GEOMETRY].

2) Press ◀▶ to select [KEYSTONE] or [CURVED].

3) Press the <ENTER> button.

- The **[GEOMETRY:KEYSTONE]** or **[GEOMETRY:CURVED]** screen is displayed.

4) Press ▲▼ to select the item to adjust.

5) Press ◀▶ to adjust.

[KEYSTONE]	
[LENS THROW RATIO] Set the throw ratio for the lens used.	
[VERTICAL KEYSTONE] 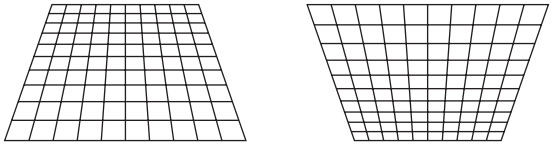	**[HORIZONTAL KEYSTONE]** 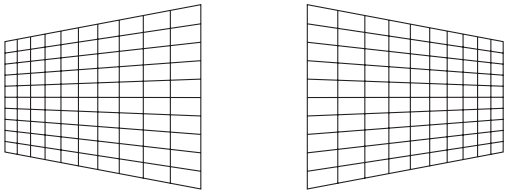
[VERTICAL BALANCE] 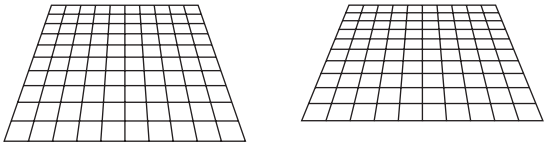 Adjust the setting according to the lens shift range in the vertical direction.	**[HORIZONTAL BALANCE]** 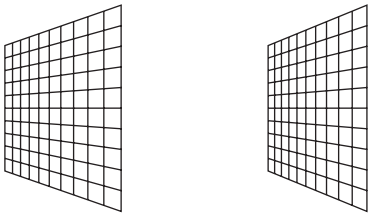 Adjust the setting according to the lens shift range in the horizontal direction.

[CURVED]	
[LENS THROW RATIO] Set the throw ratio for the lens used.	
[VERTICAL KEYSTONE] 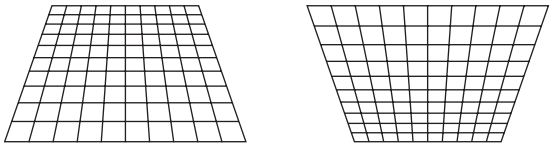	**[HORIZONTAL KEYSTONE]** 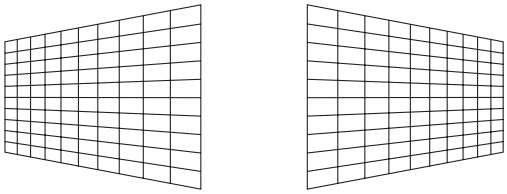
[VERTICAL ARC] 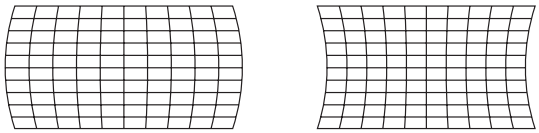	**[HORIZONTAL ARC]** 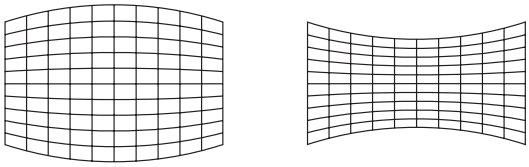

[CURVED]	
[VERTICAL BALANCE] 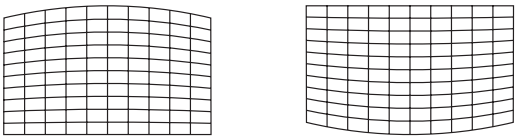	[HORIZONTAL BALANCE] 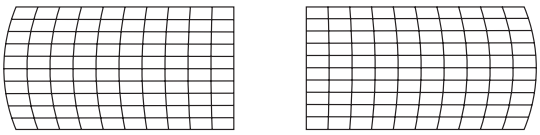
[MAINTAIN ASPECT RATIO] Select [ON] to correct while keeping the aspect ratio.	

Setting [CORNER CORRECTION]

1) **Press ▲▼ to select [GEOMETRY].**

2) **Press ◀▶ to select [CORNER CORRECTION].**

3) **Press the <ENTER> button.**
   - The **[GEOMETRY:CORNER CORRECTION]** screen is displayed.

4) **Press ▲▼ to select the item to adjust, and press the <ENTER> button.**

5) **Press ▲▼◀▶ to adjust.**

[CORNER CORRECTION]			
[UPPER LEFT] 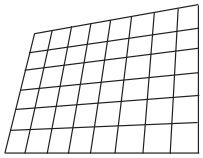	[UPPER RIGHT] 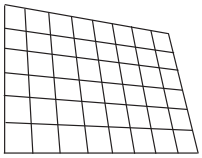	[LOWER LEFT] 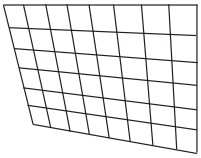	[LOWER RIGHT] 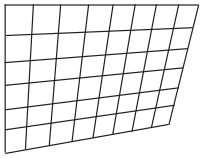
[LINEARITY] Horizontal direction 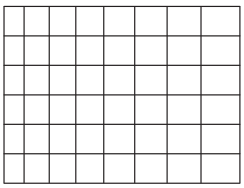 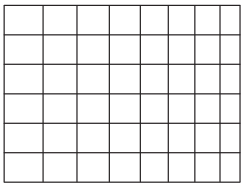		Vertical direction 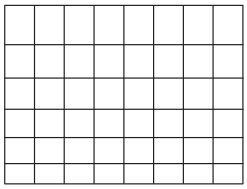 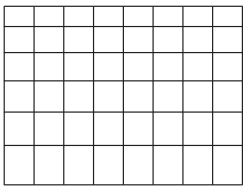	

Note

- The menu or logo may run off the screen when [GEOMETRY] is set.
- If [EDGE BLENDING] (➡ page 98) adjustment and [GEOMETRY] are used together, correct edge blending adjustment may not be possible in certain environments.
- The optional Upgrade Kit (Model No.: ET-UK20) can be used to expand the correctable range. To purchase the product, consult your dealer. (Only for PT-DZ21K2, PT-DS20K2)
- The image may disappear for a moment while performing adjustment, but it is not a malfunction.

[ADVANCED MENU] menu

On the menu screen, select [ADVANCED MENU] from the main menu, and select an item from the sub-menu.
Refer to "Navigating through the menu" (➡ page 77) for the operation of the menu screen.

[DIGITAL CINEMA REALITY]

You can increase the vertical resolution and enhance the image quality by performing cinema processing when the PAL (or SECAM) 576i signal, the NTSC 480i signal, and 1080/50i, 1080/60i are input.

1) Press ▲▼ to select [DIGITAL CINEMA REALITY].

2) Press ◀▶ to switch the item.

- The items will switch each time you press the button.

[AUTO]	Automatically detects the input signal and performs cinema processing.	
[OFF]	Does not perform cinema processing.	
[30p FIXED]	During 480i or 1080/60i signal input	Performs forced cinema processing (2:2 pulldown).
[25p FIXED]	During 576i or 1080/50i signal input	

Note

- In [DIGITAL CINEMA REALITY], the picture quality will degrade when a signal other than the 2:2 pulldown is set as [25p FIXED] or [30p FIXED]. (Vertical resolution will degrade.)
- [DIGITAL CINEMA REALITY] cannot be set when [FRAME RESPONSE] is set to [FAST], or when [FRAME RESPONSE] is set to [COMPATIBLE] and [COMPATIBLE MODE] is set to [FAST].

[BLANKING]

You can adjust the blanking width if there are noises at the edge of the screen or the image is slightly running out from the screen while an image from the VCR or other devices are projected.

1) Press ▲▼ to select [BLANKING].

2) Press the <ENTER> button.

- The **[BLANKING]** adjustment screen is displayed.

3) Press ▲▼ to select [UPPER], [LOWER], [LEFT], or [RIGHT].

- When [CUSTOM MASKING] is set to an item other than [OFF] ([PC-1], [PC-2], or [PC-3]), the blanking width can be adjusted to any shape using the computer. Up to three blanking settings adjusted using the computer can be saved. (Only for PT-DZ21K2, PT-DS20K2)
  To use the [CUSTOM MASKING] function, the optional Upgrade Kit (Model No.: ET-UK20) is required. To purchase the product, consult your dealer.

4) Press ◀▶ to adjust the blanking width.

Blanking correction	Item	Operation	Adjustment		Range of adjustment
Top of the screen	**[UPPER]**	Press ◀.	The blanking zone moves upward.	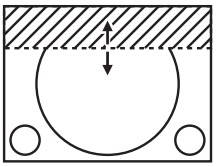	PT-DZ21K2: Top to bottom 0 - 599 PT-DS20K2: Top to bottom 0 - 524 PT-DW17K2: Top to bottom 0 - 383 PT-DZ16K2: Top to bottom 0 - 539
		Press ▶.	The blanking zone moves downward.		
Bottom of the screen	**[LOWER]**	Press ▶.	The blanking zone moves upward.	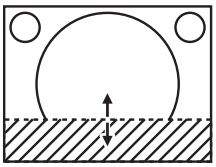	
		Press ◀.	The blanking zone moves downward.		

Blanking correction	Item	Operation	Adjustment		Range of adjustment
Left side of the screen	**[LEFT]**	Press ▶.	The blanking zone moves to the right.	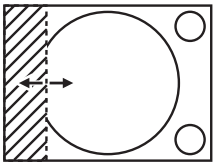	PT-DZ21K2: Left to right 0 - 959 PT-DS20K2: Left to right 0 - 699 PT-DW17K2: Left to right 0 - 682 PT-DZ16K2: Left to right 0 - 959
		Press ◀.	The blanking zone moves to the left.		
Right side of the screen	**[RIGHT]**	Press ◀.	The blanking zone moves to the right.	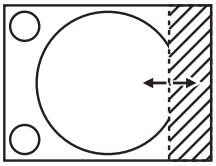	
		Press ▶.	The blanking zone moves to the left.		

[INPUT RESOLUTION]

You can adjust to achieve an optimal image when there is a flickering image or smeared outlines.

1) Press ▲▼ to select [INPUT RESOLUTION].

2) Press the <ENTER> button.

- The **[INPUT RESOLUTION]** screen is displayed.

3) Press ▲▼ to select [TOTAL DOTS], [DISPLAY DOTS], [TOTAL LINES], or [DISPLAY LINES], and press ◀▶ to adjust each item.

- Values corresponding to the signal being input are displayed automatically for each item. Increase or decrease the displayed values and adjust to the optimal point viewing the screen when there are vertical stripes or sections are missing from the screen.

Note

- Previously mentioned vertical banding will not occur with all white signal input.
- The image may be disrupted while performing the adjustment, but it is not a malfunction.
- [INPUT RESOLUTION] can be adjusted only when an RGB signal is input to the <RGB 1 IN> terminal or the <RGB 2 IN> terminal.
- Some signals may not be adjusted.

[CLAMP POSITION]

You can adjust the optimal point when the black part of the image is blunt or it has turned green.

1) Press ▲▼ to select [CLAMP POSITION].

2) Press ◀▶ to adjust.

Status	Rough guide for optimal value	Range of adjustment
The black part is blunt.	The point where bluntness of the black part improves the most is the optimal value.	1 - 255
The black part is green.	The point where the green part becomes black, and the bluntness has improved is the optimal value.	

Note

- [CLAMP POSITION] can be adjusted only when a signal is input to the <RGB 1 IN> terminal or the <RGB 2 IN> terminal.
- Adjustment is not available depending on the signal.

[EDGE BLENDING]

The edge blending function allows multiple projector images to be seamlessly overlapped by using the inclination of the brightness at the overlapped area.

1) Press ▲▼ to select [EDGE BLENDING].

2) Press ◀▶ to switch the item.

- The items will switch each time you press the button.

[OFF]	Sets the edge blending function to off.
[ON]	Use the setting value preset in the projector for the inclination of the edge blending area.
[USER]	Use the user-setting value for the inclination of the edge blending area. (Configuration/registration requires separate software. Consult your dealer.)

- To adjust edge blending, proceed to Step **3)**.

3) When [ON] or [USER] is selected, press the <ENTER> button.

- The **[EDGE BLENDING]** screen is displayed.

4) Press ▲▼ to specify the location to be corrected.

- When joining at top: Set [UPPER] to [ON]
- When joining at bottom: Set [LOWER] to [ON]
- When joining at left: Set [LEFT] to [ON]
- When joining at right: Set [RIGHT] to [ON]

5) Press ◀▶ to switch to [ON].

6) Press ▲▼ to select [START] or [WIDTH].

7) Press ◀▶ to adjust the starting position or correction width.

8) Press ▲▼ to select [MARKER].

9) Press ◀▶ to switch to [ON].

- A marker for image position adjustment is displayed. The position where the red and green lines overlap for the projectors to be joined will be the optimal point. Make sure to set the correction width for the projectors to be joined with the same value. Optimal joining is not possible with projectors that have different correction widths.

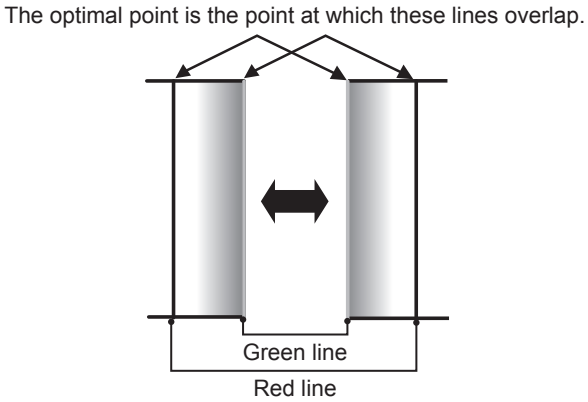

10) Press ▲▼ to select [BRIGHTNESS ADJUST].

11) Press the <ENTER> button.

- The **[BRIGHTNESS ADJUST]** screen is displayed.
- By setting [AUTO TESTPATTERN] to [ON] on the **[EDGE BLENDING]** screen, the black test pattern is displayed when you enter the **[BRIGHTNESS ADJUST]** screen.

12) Press ▲▼ to select [NON-OVERLAPPED BLACK LEVEL].

13) Press the <ENTER> button.

- The **[NON-OVERLAPPED BLACK LEVEL]** screen is displayed.
- [RED], [GREEN], and [BLUE] can be adjusted individually if [INTERLOCKED] is set to [OFF].

14) Press ▲▼ to select an item, and press ◀▶ to adjust the setting.
- Once the adjustment is completed, press the <MENU> button to return to the **[BRIGHTNESS ADJUST]** screen.

15) Press ▲▼ to select [UPPER], [LOWER], [LEFT], or [RIGHT] in [BLACK BORDER WIDTH].

16) Press ◀▶ to set the region (width) of the [BLACK BORDER WIDTH] adjustment.
- When PT-DZ21K2, PT-DS20K2, or PT-DZ16K2 is used, proceed to Step **17)**.
- When PT-DW17K2 is used, proceed to Step **19)**.

17) Press ▲▼ to select [UPPER KEYSTONE AREA], [LOWER KEYSTONE AREA], [LEFT KEYSTONE AREA], or [RIGHT KEYSTONE AREA].

18) Press ◀▶ to adjust the tilt of the border between [NON-OVERLAPPED BLACK LEVEL] and [BLACK BORDER LEVEL].

19) Press ▲▼ to select [BLACK BORDER LEVEL].

20) Press the <ENTER> button.
- The **[BLACK BORDER LEVEL]** screen is displayed.
- [RED], [GREEN], and [BLUE] can be adjusted individually if [INTERLOCKED] is set to [OFF].

21) Press ▲▼ to select an item, and press ◀▶ to adjust the setting.
- Once the adjustment is completed, press the <MENU> button to return to the **[BLACK BORDER LEVEL]** screen.

22) Press ▲▼ to select [UPPER], [LOWER], [LEFT], or [RIGHT] for [OVERLAPPED BLACK LEVEL].

23) Press the <ENTER> button.
- The **[OVERLAPPED BLACK LEVEL]** screen is displayed.
- [RED], [GREEN], and [BLUE] can be adjusted individually if [INTERLOCKED] is set to [OFF].

24) Press ▲▼ to select an item, and press ◀▶ to adjust the setting.

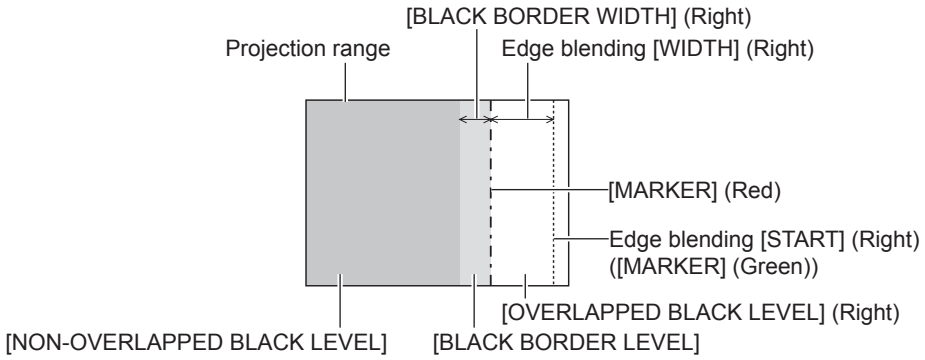

Note

- [BRIGHTNESS ADJUST] is a function that makes the increased brightness in black level of the overlapping image area difficult to notice when [EDGE BLENDING] is used to configure multiple screens. The optimal point of correction is set by adjusting [NON-OVERLAPPED BLACK LEVEL] so the black level of the overlapping image area will be the same level as the non-overlapping area. If the border area of the part where the image is overlapping and the non-overlapping part gets brighter after adjusting [NON-OVERLAPPED BLACK LEVEL], adjust the width of the top, bottom, left, or right. Adjust [BLACK BORDER LEVEL] when the width adjustment makes only the border area darker.
- The joining part may look discontinuous depending on the position you are looking from when a screen with high gain or rear screen is used.
- When configuring multiple screens using both horizontal and vertical edge blending, adjust [OVERLAPPED BLACK LEVEL] first before making adjustments in Step **12)**. Adjustment method is same as the procedure of [NON-OVERLAPPED BLACK LEVEL].
- If only horizontal or vertical edge blending is used, set all items in [OVERLAPPED BLACK LEVEL] to 0.
- The [AUTO TESTPATTERN] setting changes synchronizing with [AUTO TESTPATTERN] of [COLOR MATCHING].
- Adjustment of the tilt of the border between [NON-OVERLAPPED BLACK LEVEL] and [BLACK BORDER LEVEL] is a function to perform the adjustment of [GEOMETRY] (➡ page 93) together with the edge blending. If [NON-OVERLAPPED BLACK LEVEL] is tilted by correcting the keystone from [KEYSTONE] in [GEOMETRY], perform Steps **17)** and **18)** to adjust the edge blending according to the shape of [NON-OVERLAPPED BLACK LEVEL].

[FRAME RESPONSE]

Set image frame delay.

1) Press ▲▼ to select [FRAME RESPONSE].

2) Press ◀▶ to switch the item.

- The items will switch each time you press the button.

[NORMAL]	Standard setting.
[FAST][*1]	Simplifies the image processing to reduce image frame delay.
[FIXED]	Sets image frame delay to be constant regardless of the image position or magnification.
[COMPATIBLE][*2]	Sets to DZ21K series compatible frame delay. DZ21K series: DZ21K series, DS20K series, DZ16K series

*1 When input signals are other than interlaced signals, [FAST] cannot be set.
*2 Only for PT-DZ21K2, PT-DS20K2, PT-DZ16K2

- When [COMPATIBLE] is selected, proceed to Step **3)**.

3) Press the <ENTER> button.

4) Press ◀▶ to switch the [COMPATIBLE MODE] setting.

- The items will switch each time you press the button.

[NORMAL]	Standard setting compatible with DZ21K serires.
[FAST]	Reduces the image frame delay with the DZ21K series compatible setting.

Note

- [DIGITAL CINEMA REALITY] cannot be set when [FRAME RESPONSE] is set to [FAST], or when [FRAME RESPONSE] is set to [COMPATIBLE] and [COMPATIBLE MODE] is set to [FAST].
- [FRAME RESPONSE] cannot be set during P IN P.
- [COMPATIBLE MODE] cannot be set when [FRAME RESPONSE] is set to [NORMAL], [FAST], or [FIXED].

[FRAME CREATION]

(Only for PT-DZ21K2, PT-DS20K2, PT-DZ16K2)
Set the amount of image frame interpolation.
The image with fast movement can be displayed more smoothly by automatically generating the intermediate frame from the previous and next frame.

1) Press ▲▼ to select [FRAME CREATION].

2) Press ◀▶ to switch the item.

- The items will switch each time you press the button.

[OFF]	Disables the frame creation function.
[1]	Sets the amount of interpolation weaker.
[2]	Sets the amount of interpolation midway. (Factory default)
[3]	Sets the amount of interpolation stronger.

Note

- The effect may be difficult to notice depending on the image.
- Switch the setting when the image looks unnatural due to delay of image or generation of noise.
- The [FRAME CREATION] setting will be disabled and cannot be selected when [FRAME RESPONSE] is set to [FAST] or [COMPATIBLE].
- The [FRAME CREATION] setting will be disabled and cannot be selected when the [3D SETTINGS] menu → [3D SYSTEM SETTING] (➡ page 103) is set to [DUAL (LEFT)] or [DUAL (RIGHT)].
- The [FRAME CREATION] setting will be disabled and cannot be selected when the [3D SETTINGS] menu → [3D INPUT FORMAT] (➡ page 104) is set to [AUTO], [SIMULTANEOUS], [SIDE BY SIDE], [TOP AND BOTTOM], [LINE BY LINE], or [FRAME SEQUENTIAL]. In [AUTO], the setting will be disabled only when 3D format can be recognized. (Only for PT-DZ21K2, PT-DS20K2)
- The [FRAME CREATION] setting will be disabled and cannot be selected when the [DISPLAY OPTION] menu → [SIMUL INPUT SETTING] (➡ page 112) is set to [AUTO(3D)] or [AUTO(2D)] and the image in simultaneous format is displayed.
- This function is disabled when the internal test pattern or [3D TEST PATTERN] is displayed.

[FRAME LOCK]

(Only for PT-DZ21K2, PT-DS20K2)
Set this function to display the image in 3D when the vertical scanning frequency of the signal is 25 Hz, 50 Hz, and 100 Hz.

1) Press ▲▼ to select [FRAME LOCK].

2) Press ◀▶ to switch the item.

- The items will switch each time you press the button.

[OFF]	Decreases the flickering of the displayed image.
[ON]	Synchronizes the displayed image to the vertical scanning frequency of the input signal.

Note

- [FRAME LOCK] is not displayed when a signal with the vertical scanning frequency other than the above is input or 2D images are displayed.
- The image may flicker when [FRAME LOCK] is set to [ON].
- The displayed image may look discontinuous when [FRAME LOCK] is set to [OFF].

[RASTER POSITION]

This will allow the position of the image to move within the display area arbitrarily when the input image is not using the whole display area.

1) Press ▲▼ to select [RASTER POSITION].

2) Press the <ENTER> button.

- The **[RASTER POSITION]** screen is displayed.

3) Press ▲▼◀▶ to adjust the position.

[DISPLAY LANGUAGE] menu

On the menu screen, select [DISPLAY LANGUAGE] from the main menu, and display the sub-menu. Refer to "Navigating through the menu" (➡ page 77) for the operation of the menu screen.

Changing the display language

You can select the language of the on-screen display.

1) Press ▲▼ to select the display language and press the <ENTER> button.

- Various menus, settings, adjustment screens, control button names, etc., are displayed in the selected language.
- The language can be changed to English, German, French, Spanish, Italian, Portuguese, Japanese, Chinese, Russian, or Korean.

Note

- The on-screen display language of the projector is set to English by default as well as when [ALL USER DATA] (➡ page 143) in [INITIALIZE] is executed.

[3D SETTINGS] menu

(Only for PT-DZ21K2, PT-DS20K2)

On the menu screen, select [3D SETTINGS] from the main menu, and select an item from the sub-menu. Refer to "Navigating through the menu" (➡ page 77) for the operation of the menu screen.

[3D SYSTEM SETTING]

Set the image display method to be used during 3D signal input, according to the 3D system in use.

1) Press ▲▼ to select [3D SYSTEM SETTING].

2) Press ◀▶ to switch the item.

- The items will switch each time you press the button.

[SINGLE]	During 3D signal input, images for the left eye and right eye are alternately displayed using the frame sequential format.
[DUAL (LEFT)]	Only images for the left eye are displayed during 3D signal input.
[DUAL (RIGHT)]	Only images for the right eye are displayed during 3D signal input.

Note

- When 2D images are input, 2D images are displayed regardless of the [3D SYSTEM SETTING] settings.

[3D SYNC SETTING]

Set the way in which the <3D SYNC 1 IN/OUT> terminal and the <3D SYNC 2 OUT> terminal will be used.

Attention

- Before connecting external devices to the <3D SYNC 1 IN/OUT> terminal and the <3D SYNC 2 OUT> terminal using cables, complete the [3D SYNC MODE] setting and confirm that the external devices to be connected are turned off.
- Changing the [3D SYNC MODE] setting while the cables are connected may result in malfunctions of the projector or the connected external devices.

1) Press ▲▼ to select [3D SYNC SETTING].

2) Press the <ENTER> button.

- The precaution message related to [3D SYNC SETTING] is displayed.

3) Press the <ENTER> button.

- The **[3D SYNC SETTING]** screen is displayed.

4) Press ▲▼ to select [3D SYNC MODE].

5) Press ◀▶ to switch the item.

[3D SYNC MODE]	Details to be set in [3D SYNC1]	Details to be set in [3D SYNC2]
[OFF]	Not used.	Not used.
[1]	3D trigger output	Stereo synch output
[2]	3D trigger output	3D trigger output
[3]	Stereo synch input	Through 3D SYNC1
[4]	Stereo synch input	Stereo synch output
[5]	Stereo synch input	3D trigger output
[6]	Frame synch input	Through 3D SYNC1
[7]	Frame synch input	Stereo synch output
[8]	Frame synch input	3D trigger output
[9]	3D trigger output	Frame synch output
[10]	Stereo synch output	Frame synch output
[11]	3D IR TRANSMITTER (+) output	3D IR TRANSMITTER (–) output

6) When [1], [4], [7], or [10] is selected, press ▲▼ to select [STEREO SYNC OUTPUT DELAY], and press ◀▶ to set the amount of delay for output.

[0us] - [25000us]	Sets the amount in 10 us increments.

- To synchronize multiple projectors to display 3D images, use a frame synch input and output.

Select [9] or [10] for the first projector.
Select [6], [7], or [8] for the second and subsequent projectors.

- Stereo synchronization is a signal having a 50 % duty cycle where High is for the left eye and Low is for the right eye.
- “H” is output to the 3D image display and “L” is output to the 2D image display from the terminal for which 3D trigger output is selected.

Note

- [11] in [3D SYNC MODE] is the setting when the 3D IR transmitter TY-3DTRW of Panasonic (production discontinued) is used with the projector. Consult your dealer regarding the connection method.

[3D INPUT FORMAT]

Set the 3D format for the image signals being input.
Set a 3D format that matches the input signal.

1) Press ▲▼ to select [3D INPUT FORMAT].

2) Press the <ENTER> button.

- The **[3D INPUT FORMAT]** screen is displayed.

3) Press ▲▼ to select a 3D format.

[AUTO]*1	Automatically detects 3D format of input image signals to display images.
[NATIVE]	Forcibly displays 2D images regardless of input image signals.
[SIMULTANEOUS]*2	Forcibly displays 3D images in simultaneous format regardless of input video signals.
[SIDE BY SIDE]	Forcibly displays 3D images in side by side format regardless of input image signals.
[TOP AND BOTTOM]	Forcibly displays 3D images in top and bottom format regardless of input image signals.
[LINE BY LINE]*3	Forcibly displays 3D images in line by line format regardless of input video signals.
[FRAME SEQUENTIAL]*4	Forcibly displays 3D images in frame sequential format regardless of input image signals.

*1 Only during DVI-D or HDMI input
*2 Only during 3G-SDI level B input
*3 Only while signals other than interlaced signals are input
*4 Only while progressive signals with the vertical scanning frequency of 100 Hz or 120 Hz are input to the <RGB1>/<RGB2>/<DVI-D> terminals

4) Press the <ENTER> button.

Note

- When [AUTO], [SIMULTANEOUS], [SIDE BY SIDE], [TOP AND BOTTOM], [LINE BY LINE], or [FRAME SEQUENTIAL] is set, 3D images are not displayed with the [DISPLAY OPTION] menu → [SIMUL INPUT SETTING]. In [AUTO], however, this only occurs when 3D format can be recognized.
- This may not function properly for some connected external devices.

[LEFT/RIGHT SWAP]

Display images by inverting the timing when the left and right images are swapped. Change the setting when there is something wrong with the 3D image being viewed.

1) Press ▲▼ to select [LEFT/RIGHT SWAP].

2) Press ◀▶ to switch the item.

- The items will switch each time you press the button.

[NORMAL]	Do not change the [NORMAL] setting if the 3D images are displayed correctly.
[SWAPPED]	Select this item when left and right 3D images are swapped to be displayed.

Note

- This function is disabled when [3D SYSTEM SETTING] is set to anything other than [SINGLE].

[3D COLOR MATCHING]

Switch the color matching correction data applied to displayed image.

1) Press ▲▼ to select [3D COLOR MATCHING].

2) Press ◀▶ to switch the item.

- The items will switch each time you press the button.

[SHARED 2D/3D]	Uses same correction data for 2D signal and 3D signal.
[SEPARATE 2D/3D]	Uses different correction data for 2D signal and 3D signal.

Note

- Switch the setting of [COLOR MATCHING] (➡ page 108) while the signal to be adjusted is being input.

[3D PICTURE BALANCE]

Correct the difference when the images for left eye and right eye have different brightness or color.

1) Press ▲▼ to select [3D PICTURE BALANCE].

2) Press the <ENTER> button.

- The **[3D PICTURE BALANCE]** screen is displayed.

3) Press ▲▼ to select an item, and press ◀▶ to adjust the setting.

- Using the left eye image as a reference, the right eye image is corrected using the set value.
- For [3D WAVEFORM MONITOR], the images for the left eye and right eye are split horizontally on the left and right, and waveforms are displayed.

[CONTRAST]	Adjusts the contrast of colors.	
[WHITE BALANCE HIGH RED]	Adjusts the red color of the white balance high.	
[WHITE BALANCE HIGH GREEN]	Adjusts the green color of the white balance high.	
[WHITE BALANCE HIGH BLUE]	Adjusts the blue color of the white balance high.	
[BRIGHTNESS]	Adjusts the dark (black) part of the projected image.	
[WHITE BALANCE LOW RED]	Adjusts the red color of the white balance low.	
[WHITE BALANCE LOW GREEN]	Adjusts the green color of the white balance low.	
[WHITE BALANCE LOW BLUE]	Adjusts the blue color of the white balance low.	
[COLOR]	Adjusts the color saturation.	
[TINT]	Adjusts the skin tone in the projected image.	
[CLOCK PHASE]	Adjusts the image when there is flickering in the image or blur of the outline.	
[3D WAVEFORM MONITOR]	**[OFF]**	Does not display the 3D waveform monitor.
	[ON]	Displays the 3D waveform monitor.

Note

- The [CLOCK PHASE] setting is enabled during simultaneous input of RGB1 and RGB2, and is adjusted against the right eye image.
- This function is disabled when [3D SYSTEM SETTING] is set to anything other than [SINGLE].
- This function is disabled when [3D TEST PATTERN] is displayed.
- This function is disabled when [3D TEST MODE] is set to anything other than [NORMAL].
- The 3D waveform monitor is displayed only when the **[3D PICTURE BALANCE]** screen is displayed.
- The normal waveform monitor cannot be displayed when the 3D image is displayed.

[DARK TIME SETTING]

Set the black display period that is displayed between the right eye image and the left eye image to match the 3D system in use.

1) Press ▲▼ to select [DARK TIME SETTING].

2) Press ◀▶ to switch the item.

- The items will switch each time you press the button.

[0.5ms]	Sets an item so that 3D setting is made correctly.
[1.0ms]	
[1.5ms]	
[2.0ms]	
[2.5ms]	
[2.7ms]	

Note

- This function is disabled when [3D SYSTEM SETTING] is set to anything other than [SINGLE].
- The crosstalk may get larger or the displayed image may get darker when the setting does not match with the 3D system in use.

[3D FRAME DELAY]

Adjust the timing of the left-right switch of an image.

1) Press ▲▼ to select [3D FRAME DELAY].

2) Press ◀▶ to switch the item.

[0us] - [25000us]	Sets the amount in 10 us increments.

- The adjustment range depends on the input signal.

[3D TEST MODE]

Set the image display mode for use with 3D system adjustments.

1) Press ▲▼ to select [3D TEST MODE].

2) Press ◀▶ to switch the item.

[NORMAL]	Normal setting.
[LEFT/LEFT]	Displays the image of the left eye input signal for both the left and right eye image.
[RIGHT/RIGHT]	Displays the image of the right eye input signal for both the left and right eye images.
[LEFT/BLACK]	Displays the image of the left eye input signal for the left eye image, and all black images for the right eye image.
[BLACK/RIGHT]	Displays all black images for the left eye image, and the image of the right eye input signal for the right eye image.

Note

- The [3D TEST MODE] setting returns to [NORMAL] when the projector is switched off.
- This function is disabled when [3D SYSTEM SETTING] is set to anything other than [SINGLE].
- This function is disabled when [3D TEST PATTERN] is displayed.

[3D TEST PATTERN]

The 3D test pattern can be used to check operation and make adjustments even without a 3D signal.

1) Press ▲▼ to select [3D TEST PATTERN].

2) Press ◀▶ to switch the item.

Menu screen + input screen	Select a test pattern that is easy to check operation or make adjustment.
Menu screen + left: white/ right: black	
Menu screen + left: black/ right: white	

Note

- When the [DISPLAY OPTION] menu → [RGB IN] → [RGB1 INPUT SETTING] (➡ page 113) is set to [VIDEO] or [Y/C], the 3D test pattern cannot be displayed while the <RGB 1 IN> terminal is selected.
- This function is disabled when [3D SYSTEM SETTING] is set to anything other than [SINGLE].

[SAFETY PRECAUTIONS MESSAGE]

Set to show or hide the safety precautions message related to 3D viewing when the projector is switched on.

1) Press ▲▼ to select [SAFETY PRECAUTIONS MESSAGE].

2) Press ◀▶ to switch the item.

- The items will switch each time you press the button.

[ON]	Shows the safety precautions message related to 3D viewing when the projector is switched on.
[OFF]	Hides the safety precautions message related to 3D viewing when the projector is switched on.

Note

- If [OFF] is set, the safety precautions message related to 3D viewing is not displayed when the projector is switched on.
- A confirmation screen is displayed when switched from [ON] to [OFF]. Press ◀▶ to select [OK], and press the <ENTER> button to change the setting to [OFF].

Attention

- If 3D images are viewed by unspecified number of people for commercial use, display the safety precautions message related to 3D viewing to notify viewers.

[3D SAFETY PRECAUTIONS]

Show the safety precautions message related to 3D viewing.

1) Press ▲▼ to select [3D SAFETY PRECAUTIONS].

2) Press the <ENTER> button.

- The **[3D SAFETY PRECAUTIONS]** screen is displayed.
- Press ◀▶ to switch the page.

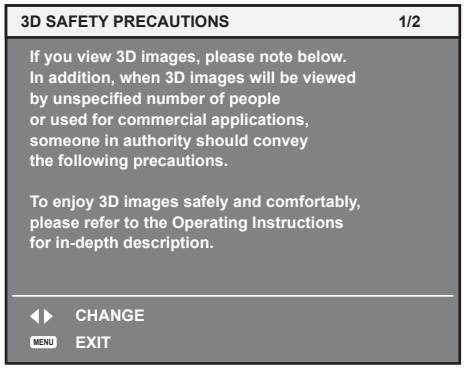

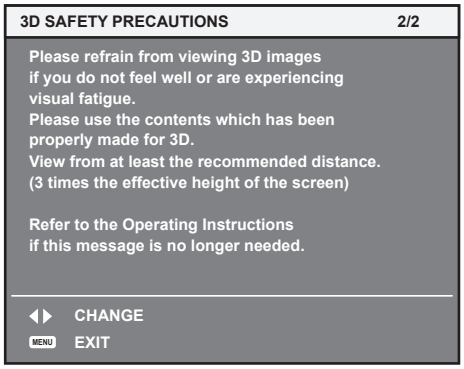

[DISPLAY OPTION] menu

On the menu screen, select [DISPLAY OPTION] from the main menu, and select an item from the sub-menu.
Refer to "Navigating through the menu" (➡ page 77) for the operation of the menu screen.

[COLOR MATCHING]

Correct the color difference between projectors when using multiple projectors simultaneously.

Adjusting the color matching as desired

1) **Press ▲▼ to select [COLOR MATCHING].**

2) **Press ◀▶ to switch the item.**
   - The items will switch each time you press the button.

[OFF]	Color matching adjustment is not carried out.
[3COLORS]	Adjusts the three colors [RED], [GREEN], or [BLUE].
[7COLORS]	Adjusts the seven colors [RED], [GREEN], [BLUE], [CYAN], [MAGENTA], [YELLOW], or [WHITE].
[709MODE]	Refer to "Adjusting the color matching using a colorimeter" (➡ page 108) for details about this mode.
[MEASURED]	

3) **Select [3COLORS] or [7COLORS], and press the <ENTER> button.**
   - The **[3COLORS]** or **[7COLORS]** screen is displayed.

4) **Press ▲▼ to select [RED], [GREEN], or [BLUE] ([RED], [GREEN], [BLUE], [CYAN], [MAGENTA], [YELLOW], or [WHITE] for [7COLORS]).**

5) **Press the <ENTER> button.**
   - The **[3COLORS:RED]**, **[3COLORS:GREEN]**, or **[3COLORS:BLUE]** screen is displayed.
     For [7COLORS], the **[7COLORS:RED]**, **[7COLORS:GREEN]**, **[7COLORS:BLUE]**, **[7COLORS:CYAN]**, **[7COLORS:MAGENTA]**, **[7COLORS:YELLOW]**, or **[7COLORS:WHITE]** screen is displayed.
   - By setting [AUTO TESTPATTERN] to [ON], the test pattern for the selected color is displayed.

6) **Press ▲▼ to select [RED], [GREEN], or [BLUE].**

7) **Press ◀▶ to adjust.**
   - The adjustment value changes between 0 and 2 048.

Note

- Operation when correcting the adjustment color
  When the correction color same as the adjustment color is changed: The luminance of the adjustment color changes.
  When correction color red is changed: Red is added to or subtracted from the adjustment color.
  When correction color green is changed: Green is added to or subtracted from the adjustment color.
  When correction color blue is changed: Blue is added to or subtracted from the adjustment color.
- Since advanced skills are necessary for the adjustment, this adjustment should be carried out by a person who is familiar with the projector or by a service person.
- Pressing the <DEFAULT> button on the remote control will restore the factory default settings for all items.
- When [COLOR MATCHING] is set to other than [OFF], [COLOR TEMPERATURE] is fixed to [USER1].
- By setting [3D COLOR MATCHING] (➡ page 104), you can set whether to configure different settings for 2D signal and 3D signal, or to use common data. (Only for PT-DZ21K2, PT-DS20K2)
- [NATIVE] or [3D] is displayed at the top right of the menu when different settings are used for 2D signal and 3D signal. (Only for PT-DZ21K2, PT-DS20K2)

Adjusting the color matching using a colorimeter

Use a colorimeter that can measure chromaticity coordinates and luminance to change the colors [RED], [GREEN], [BLUE], [CYAN], [MAGENTA], [YELLOW], or [WHITE] to desired colors.

1) **Press ▲▼ to select [COLOR MATCHING].**

2) **Press ◀▶ to select [709MODE] or [MEASURED].**

3) **Press the <ENTER> button.**
   - The **[709MODE]** or **[MEASURED MODE]** screen is displayed.

4) Press ▲▼ to select [MEASURED DATA].

5) Press the <ENTER> button.
- The **[MEASURED DATA]** screen is displayed.

6) Measure the current luminance (Y) and the chromaticity coordinates (x, y) using the colorimeter.

7) Press ▲▼ to select a color, and press ◀▶ to adjust the setting.
- Set [AUTO TESTPATTERN] to [ON] to display a test pattern of selected colors.

8) Once all the input is completed, press the <MENU> button.
- The **[709MODE]** or **[MEASURED MODE]** screen is displayed.
- When [MEASURED] is selected in Step **2)**, proceed to Step **9)** and enter the coordinates of desired colors.

9) Press ▲▼ to select [TARGET DATA].

10) Press the <ENTER> button.
- The **[TARGET DATA]** screen is displayed.

11) Press ▲▼ to select a color and press ◀▶ to input coordinates for desired colors.
- By setting [AUTO TESTPATTERN] to [ON], the test pattern for the selected color is displayed.

12) Once all the input is completed, press the <MENU> button.

Note

- When [709MODE] is selected in [COLOR MATCHING], the ITU-R BT.709 standard three primary colors are set as target data.
- Colors are not displayed properly when target data is a color outside the region of this projector.
- The [709MODE] may differ slightly from the ITU-R BT.709 standard colors.
- Set the [AUTO TESTPATTERN] to [ON] to automatically display a test pattern for use in adjusting the selected adjustment colors.
- Before using a colorimeter or similar instrument to measure measurement data, set [PICTURE MODE] to [DYNAMIC].
- A difference in the color coordinates of target data and measurement values obtained from an instrument may occur for certain instruments and measurement environments used.
- [AUTO TESTPATTERN] settings change together with the [AUTO TESTPATTERN] of [EDGE BLENDING].

[LARGE SCREEN CORRECTION]

Corrects the phenomenon in which colors that appear lighter when viewed on a large screen viewed from a close distance compared to when viewed on an average screen size so that colors appear the same.

1) Press ▲▼ to select [LARGE SCREEN CORRECTION].

2) Press ◀▶ to switch the item.

[OFF]	Performs no correction.
[1]	Performs weak correction.
[2]	Performs strong correction.

[SCREEN SETTING]

(Only for PT-DZ21K2, PT-DS20K2, PT-DZ16K2)
Set the screen size.
Correct to the optimum image position for the set screen when the aspect ratio of a projected image is changed.
Set as necessary for the screen in use.

1) Press ▲▼ to select [SCREEN SETTING].

2) Press the <ENTER> button.
- The **[SCREEN SETTING]** screen is displayed.

3) Press ◀▶ to switch the [SCREEN FORMAT] item.
- The items will switch each time you press the button.

Model No.	[SCREEN FORMAT]	Range when [SCREEN POSITION] is selected
PT-DZ21K2	[16:10]	Cannot be adjusted.
	[4:3]	Adjusts the horizontal position between –160 and 160.
	[16:9]	Adjusts the vertical position between –60 and 60.

Model No.	[SCREEN FORMAT]	Range when [SCREEN POSITION] is selected
PT-DS20K2	[4:3]	Cannot be adjusted.
	[16:9]	Adjusts the vertical position between –132 and 131.
PT-DZ16K2	[16:9]	Cannot be adjusted.
	[4:3]	Adjusts the horizontal position between –240 and 240.

4) Press ▲▼ to select [SCREEN POSITION].

- [SCREEN POSITION] cannot be selected or adjusted when [SCREEN FORMAT] is set to the following item.
  PT-DZ21K2: [16:10]
  PT-DS20K2: [4:3]
  PT-DZ16K2: [16:9]

5) Press ◀▶ to adjust [SCREEN POSITION].

[AUTO SIGNAL]

Set whether to execute automatic setup of signals automatically.
The screen display position or signal level can be adjusted automatically without pressing the <AUTO SETUP> button on the remote control on each occasion if you input unregistered signals frequently at meetings, etc.

1) Press ▲▼ to select [AUTO SIGNAL].

2) Press ◀▶ to switch the item.

- The items will switch each time you press the button.

[OFF]	Sets the auto signal function to off.
[ON]	Executes automatic setup automatically when images are changed to unregistered signals during projection.

[AUTO SETUP]

Set this when adjusting a special signal or horizontally long (such as 16:9) signal.

Setting with [MODE]

1) Press ▲▼ to select [AUTO SETUP].

2) Press the <ENTER> button.

- The **[AUTO SETUP]** screen is displayed.

3) Press ▲▼ to select [MODE].

4) Press ◀▶ to switch the item.

- The items will switch each time you press the button.

[DEFAULT]	Standard setting.
[WIDE]	Select this item when an image aspect ratio is a wide-screen signal, which does not meet the [DEFAULT] setting.
[USER]	Select this item when receiving a signal with a special horizontal resolution (number of display dots).

- When [DEFAULT] or [WIDE] is selected, proceed to Step **7)**.
- When [USER] is selected, proceed to Step **5)**.

5) Press ▲▼ to select [DISPLAY DOTS], and press ◀▶ to adjust [DISPLAY DOTS] to the horizontal resolution of the signal source.

6) Press ▲▼ to select [MODE].

7) Press the <ENTER> button.

- Automatic adjustment is executed. [PROGRESS] is displayed while in automatic adjustment. When completed, the screen returns to the **[AUTO SETUP]** screen.

Adjusting position automatically

1) **Press ▲▼ to select [AUTO SETUP].**

2) **Press the <ENTER> button.**
   - The **[AUTO SETUP]** screen is displayed.

3) **Press ▲▼ to select [POSITION ADJUST].**

4) **Press ◀▶ to switch the item.**

[ON]	Adjust the screen position and size when automatic setup is executed.
[OFF]	Does not perform automatic adjustment.

Adjusting signal level automatically

1) **Press ▲▼ to select [AUTO SETUP].**

2) **Press the <ENTER> button.**
   - The **[AUTO SETUP]** screen is displayed.

3) **Press ▲▼ to select [SIGNAL LEVEL ADJUST].**

4) **Press ◀▶ to switch the item.**

[OFF]	Does not perform automatic adjustment.
[ON]	Adjusts black level (on-screen menu [BRIGHTNESS]) and white level (on-screen menu [CONTRAST]) when automatic setup is executed.

Note

- [SIGNAL LEVEL ADJUST] may not function properly unless a still image containing clear blacks and whites is input.

[BACKUP INPUT SETTING]

Set the backup function that switches the signal to the backup input signal as seamless as possible when input signal is disrupted.

1) **Press ▲▼ to select [BACKUP INPUT SETTING].**

2) **Press the <ENTER> button.**
   - The **[BACKUP INPUT SETTING]** screen is displayed.

3) **Press ▲▼ to select [BACKUP INPUT MODE].**

4) **Press ◀▶ to switch the item.**
   - The items will switch each time you press the button.

[OFF]	Disables the backup function.
[ON]*1/[1]*2	Enables the backup function between the DVI-D input and the HDMI input. The input is switched as seamless as possible when the same signal is input to the primary and secondary inputs. Primary input is fixed to the <DVI-D IN> terminal, and the secondary input is fixed to the <HDMI IN> terminal.
[2]*2	Enables the backup function between the SDI1 input and the SDI2 input. The input is switched as seamless as possible when the same signal is input to the primary and secondary inputs. Primary input is fixed to the <SDI IN 1> terminal, and the secondary input is fixed to the <SDI IN 2> terminal.

*1 Only for PT-DW17K2, PT-DZ16K2
*2 Only for PT-DZ21K2, PT-DS20K2

5) **Press ▲▼ to select [AUTOMATIC SWITCHING].**
   - When [BACKUP INPUT MODE] is set to [OFF], [AUTOMATIC SWITCHING] cannot be selected.

6) Press ◀▶ to switch the item.

- The items will switch each time you press the button.

[ENABLE]	Switches to the secondary input automatically when the input signal for primary input is disrupted.
[DISABLE]	Disables the automatic input switching function.

Note

- The backup function is enabled when [BACKUP INPUT MODE] is set to [ON] or [1], and same signal is input to the <DVI-D IN> terminal and the <HDMI IN> terminal.
  Alternatively, the backup function is enabled when [BACKUP INPUT MODE] is set to [2], and same signal is input to the <SDI IN 1> terminal and the <SDI IN 2>.
- To switch to the backup input signal using the backup function, make sure that the following three conditions are satisfied to be ready to use the function.
  - Set [BACKUP INPUT MODE] to [ON] or [1], [2].
  - Input the same signal to the primary and secondary inputs.
  - Display the image of the primary input.
- If the input is switched to other than the primary or secondary input while the backup function is ready for use, the state of readiness to use the backup function is canceled. To switch to the backup input signal using the backup function again, switch to the primary input.
- [BACKUP INPUT STATUS] is displayed in input guide (➡ page 119) and **[STATUS]** screen (➡ pages 74, 137) when [BACKUP INPUT MODE] is set to [ON] or [1], [2].
  When switching to the backup input signal is possible using the backup function, [ACTIVE] is displayed in [BACKUP INPUT STATUS]. When it is not possible, [INACTIVE] is displayed instead.
  When [BACKUP INPUT STATUS] is [ACTIVE] while the image of the primary input is displayed, the secondary input becomes the backup input.
  When [BACKUP INPUT STATUS] is [ACTIVE] while the image of the secondary input is displayed, the primary input becomes the backup input.
- If [BACKUP INPUT MODE] is set to [ON] or [1], the input is switched seamlessly when the inputs of DVI-D and HDMI are switched while switching to the backup input signal is possible.
- If [BACKUP INPUT MODE] is set to [2], the input is switched seamlessly when the inputs of SDI1 and SDI2 are switched while switching to the backup input signal is possible.
- When [AUTOMATIC SWITCHING] is set to [ENABLE], and [BACKUP INPUT STATUS] is [ACTIVE], the signal is switched to the backup input if the input signal is disrupted.
- When [AUTOMATIC SWITCHING] is set to [ENABLE] and the signal is automatically switched to the backup input due to disruption of the input signal, [BACKUP INPUT STATUS] changes to [INACTIVE]. In this case, switching to the backup input signal is not possible until the original input signal is restored. If the signal is automatically switched to the backup input, switching to the backup input signal becomes possible when the original input signal is restored. In this case, the current input is retained.
- [BACKUP INPUT SETTING] cannot be set during P IN P. The backup operation is not performed either.
- [BACKUP INPUT SETTING] cannot be set when the [DISPLAY OPTION] menu → [SIMUL INPUT SETTING] → [HDMI/DVI-D] or [SDI1/SDI2] is set to anything other than [OFF]. The backup operation is not performed either.
- [BACKUP INPUT SETTING] cannot be set when the [DISPLAY OPTION] menu → [SDI IN] → [SDI LINK] is set to [DUAL LINK] or [AUTO]. The backup operation is not performed either.

[SIMUL INPUT SETTING]

Set this function when the video signal in simultaneous format is input and used.

1) Press ▲▼ to select [SIMUL INPUT SETTING].

2) Press the <ENTER> button.

- The **[SIMUL INPUT SETTING]** screen is displayed.

3) Press ▲▼ button to select [RGB1/RGB2], [HDMI/DVI-D], or [SDI1/SDI2].

- [RGB1/RGB2] and [SDI1/SDI2] can be selected only on PT-DZ21K2 and PT-DS20K2.

4) Press ◀▶ to switch the setting.

- The items will switch each time you press the button.

[OFF]	This is not used for simultaneous input.
[AUTO(3D)]	Displays 3D images of the simultaneous format.
[AUTO(2D)][*1]	Displays 2D image of the simultaneous format.

*1 This can be set only when [SIMUL INPUT SETTING] is set to [HDMI/DVI-D] or [SDI1/SDI2].

Note

- If [AUTO(2D)] is set, 2D images are displayed when the same 2D compatible signals are entered to each input.
- When [AUTO(3D)] is set, 3D images are displayed when the same 3D compatible signals are entered to each input. (Only for PT-DZ21K2, PT-DS20K2)
- [SIMUL INPUT SETTING] cannot be set during P IN P.
- [SIMUL INPUT SETTING] cannot be set when [BACKUP INPUT MODE] is set to anything other than [OFF].
- This may not function properly for some connected external devices.

- This may not function properly depending on the signal.
- Usage of each input signal is displayed in [RGB1] and [RGB2], in [HDMI] and [DVI-D], and in [SDI1] and [SDI2] of the **[SIMUL INPUT SETTING]** screen when [AUTO(3D)] or [AUTO(2D)] is set.

[SIMUL INPUT SETTING]	Usage of the input signal	Details
[AUTO(3D)]	[LEFT INPUT]	Uses the signal for the corresponding input as a signal for the left eye image.
	[RIGHT INPUT]	Uses the signal for the corresponding input as a signal for the right eye image.
[AUTO(2D)]*1	[1st FRAME INPUT]	Uses the signal for the corresponding input as a signal for the odd frame.
	[2nd FRAME INPUT]	Uses the signal for the corresponding input as a signal for the even frame.

*1 This can be set only when [SIMUL INPUT SETTING] is set to [HDMI/DVI-D] or [SDI1/SDI2].

[RGB IN]

Set to match the signal to input to the <RGB 1 IN> terminal.

Setting [RGB1 INPUT SETTING]

1) **Press ▲▼ to select [RGB IN].**

2) **Press the <ENTER> button.**
   - The **[RGB IN]** screen is displayed.

3) **Press ▲▼ to select [RGB1 INPUT SETTING].**

4) **Press ◀▶ to switch the item.**
   - The items will switch each time you press the button.

[RGB/YP$_B$P$_R$]	Select this item when an RGB signal or YC$_B$C$_R$/YP$_B$P$_R$ signal is input to the <RGB 1 IN> terminal.
[VIDEO]	Select this item when a video signal is input to the <RGB 1 IN> (<R/P$_R$/VIDEO>) terminal.
[Y/C]	Select this item when a luminance signal and color signal are input to the <RGB 1 IN> (<G/Y>, <B/P$_B$/C>) terminal.

Switching the slice level of an input sync signal

1) **Press ▲▼ to select [RGB IN].**

2) **Press the <ENTER> button.**
   - The **[RGB IN]** screen is displayed.

3) **Press ▲▼ to select [RGB1 SYNC SLICE LEVEL] or [RGB2 SYNC SLICE LEVEL].**

4) **Press ◀▶ to switch the item.**

[LOW]	Sets the slice level to [LOW].
[HIGH]	Sets the slice level to [HIGH].

Setting [RGB2 EDID MODE]

1) **Press ▲▼ to select [RGB IN].**

2) **Press the <ENTER> button.**
   - The **[RGB IN]** screen is displayed.

3) **Press ▲▼ to select [RGB2 EDID MODE].**

4) **Press the <ENTER> button.**
   - The **[RGB2 EDID MODE]** screen is displayed.

5) **Press ◀▶ to switch [EDID MODE].**
   - The items will switch each time you press the button.

[DEFAULT]	Standard setting.
[SCREEN FIT]*1	Changes EDID data according to the [SCREEN FORMAT] setting.
[USER]	Sets the [RESOLUTION] and [VERTICAL SCAN FREQUENCY] items to EDID.

*1 Only for PT-DZ21K2, PT-DS20K2, PT-DZ16K2

- When [DEFAULT] or [SCREEN FIT] is selected, proceed to Step **10)**.

6) Press the <ENTER> button.

- The **[RESOLUTION]** screen is displayed.

7) Press ▲▼◀▶ to select [RESOLUTION].

- Select [1024x768p], [1280x720p], [1280x768p], [1280x800p], [1280x1024p], [1366x768p], [1400x1050p], [1440x900p], [1600x900p], [1600x1200p], [1680x1050p], [1920x1080p], [1920x1080i], or [1920x1200p].

8) Press the <ENTER> button.

- The **[VERTICAL SCAN FREQUENCY]** screen is displayed.

9) Press ◀▶ to select [VERTICAL SCAN FREQUENCY].

- Select [60Hz], [50Hz], [30Hz], [25Hz], or [24Hz] when [1920x1080p] is selected for [RESOLUTION].
- Select [60Hz], [50Hz], or [48Hz] when [1920x1080i] is selected for [RESOLUTION].
- Select [60Hz] or [50Hz] when anything other than [1920x1080p] or [1920x1080i] is selected for [RESOLUTION].

10) Press the <ENTER> button.

- The confirmation screen is displayed.

11) Press ◀▶ to select [OK], and press the <ENTER> button.

Note

- The setting details are displayed in [RESOLUTION] and [VERTICAL SCAN FREQUENCY] of [EDID STATUS].
- The resolution and vertical scanning frequency settings may also be required on your computer or video device.
- After configuring settings, your computer or video device or the projector may be required to be turned off and on.
- A signal may not be output with the resolution and vertical scanning frequency that have been set, depending on your computer or video device.

[DVI-D IN]

Switch the setting when the external device is connected to the <DVI-D IN> terminal of the projector and the image is not projected correctly.

1) Press ▲▼ to select [DVI-D IN].

2) Press the <ENTER> button.

- The **[DVI-D IN]** screen is displayed.

3) Press ▲▼ to select [EDID SELECT].

4) Press ◀▶ to switch the item.

- The items will switch each time you press the button.

[EDID3]	Recognizes movie-based video signals and still image signals automatically.
[EDID1]	Select this item mainly when an external device that outputs movie-based video signals (such as a Blu-ray disc player) is connected to the <DVI-D IN> terminal.
[EDID2:PC]	Select this item mainly when an external device that outputs still image-based video signals (such as a computer) is connected to the <DVI-D IN> terminal.

5) Press ▲▼ to select [SIGNAL LEVEL].

6) Press ◀▶ to switch the item.

- The items will switch each time you press the button.

[AUTO]	Automatically sets the signal level.
[0-255:PC]	Select this item when the signal output from the DVI-D terminal of an external device (such as a computer) is input to the <DVI-D IN> terminal.
[16-235]	Select this item when the signal output from the HDMI terminal of an external device (Blu-ray disc player, etc.) is input to the <DVI-D IN> terminal using a conversion cable, etc.

Note

- The optimal setting varies depending on the output setting of the connected external device. Refer to the operating instructions of the external device regarding the output of the external device.
- The data for Plug and play will change when the setting is changed. Refer to “List of compatible signals” (➡ page 209) for a resolution that supports plug and play.

Setting [EDID MODE]

1) Press ▲▼ to select [DVI-D IN].

2) Press the <ENTER> button.
- The **[DVI-D IN]** screen is displayed.

3) Press ▲▼ to select [EDID MODE].

4) Press the <ENTER> button.
- The **[DVI-D EDID MODE]** screen is displayed.

5) Press ◀▶ to switch [EDID MODE].
- The items will switch each time you press the button.

[DEFAULT]	Standard setting.
[SCREEN FIT]*1	Changes EDID data according to the [SCREEN FORMAT] setting.
[USER]	Sets the [RESOLUTION] and [VERTICAL SCAN FREQUENCY] items to EDID.

*1 Only for PT-DZ21K2, PT-DS20K2, PT-DZ16K2

- When [DEFAULT] or [SCREEN FIT] is selected, proceed to Step **10)**.

6) Press the <ENTER> button.
- The **[RESOLUTION]** screen is displayed.

7) Press ▲▼◀▶ to select [RESOLUTION].
- Select [1024x768p], [1280x720p], [1280x768p], [1280x800p], [1280x1024p], [1366x768p], [1400x1050p], [1440x900p], [1600x900p], [1600x1200p], [1680x1050p], [1920x1080p], [1920x1080i], or [1920x1200p].

8) Press the <ENTER> button.
- The **[VERTICAL SCAN FREQUENCY]** screen is displayed.

9) Press ◀▶ to select [VERTICAL SCAN FREQUENCY].
- Select [60Hz], [50Hz], [30Hz], [25Hz], or [24Hz] when [1920x1080p] is selected for [RESOLUTION].
- Select [60Hz], [50Hz], or [48Hz] when [1920x1080i] is selected for [RESOLUTION].
- Select [60Hz] or [50Hz] when anything other than [1920x1080p] or [1920x1080i] is selected for [RESOLUTION].

10) Press the <ENTER> button.
- The confirmation screen is displayed.

11) Press ◀▶ to select [OK], and press the <ENTER> button.

Note

- The setting details are displayed in [RESOLUTION] and [VERTICAL SCAN FREQUENCY] of [EDID STATUS].
- The resolution and vertical scanning frequency settings may also be required on your computer or video device.
- After configuring settings, your computer or video device or the projector may be required to be turned off and on.
- A signal may not be output with the resolution and vertical scanning frequency that have been set, depending on your computer or video device.

[HDMI IN]

Switch the setting when the external device is connected to the <HDMI IN> terminal of the projector and the image is not projected correctly.

1) Press ▲▼ to select [HDMI IN].

2) Press the <ENTER> button.
- The **[HDMI IN]** screen is displayed.

3) Press ▲▼ to select [SIGNAL LEVEL].

4) Press ◀▶ to switch the item.

- The items will switch each time you press the button.

[AUTO]	Automatically sets the signal level.
[64-940]	Select this item when the signal output from the HDMI terminal of an external device (such as a Blu-ray disc player) is input to the <HDMI IN> terminal.
[0-1023]	Select this item when the signal output from the DVI-D terminal of an external device (such as a computer) is input to the <HDMI IN> terminal via a conversion cable or similar cable. Select this item also when the signal output from the HDMI terminal of a computer or other device is input to the <HDMI IN> terminal.

Note

- The optimal setting varies depending on the output setting of the connected external device. Refer to the operating instructions of the external device regarding the output of the external device.
- The HDMI signal level is displayed for 30 bits of input.

Setting [EDID MODE]

1) Press ▲▼ to select [HDMI IN].

2) Press the <ENTER> button.

- The **[HDMI IN]** screen is displayed.

3) Press ▲▼ to select [EDID MODE].

4) Press the <ENTER> button.

- The **[HDMI EDID MODE]** screen is displayed.

5) Press ◀▶ to switch [EDID MODE].

- The items will switch each time you press the button.

[DEFAULT]	Standard setting.
[SCREEN FIT][*1]	Changes EDID data according to the [SCREEN FORMAT] setting.
[USER]	Sets the [RESOLUTION] and [VERTICAL SCAN FREQUENCY] items to EDID.

*1 Only for PT-DZ21K2, PT-DS20K2, PT-DZ16K2

- When [DEFAULT] or [SCREEN FIT] is selected, proceed to Step **10)**.

6) Press the <ENTER> button.

- The **[RESOLUTION]** screen is displayed.

7) Press ▲▼◀▶ to select [RESOLUTION].

- Select [1024x768p], [1280x720p], [1280x768p], [1280x800p], [1280x1024p], [1366x768p], [1400x1050p], [1440x900p], [1600x900p], [1600x1200p], [1680x1050p], [1920x1080p], [1920x1080i], or [1920x1200p].

8) Press the <ENTER> button.

- The **[VERTICAL SCAN FREQUENCY]** screen is displayed.

9) Press ◀▶ to select [VERTICAL SCAN FREQUENCY].

- Select [60Hz], [50Hz], [30Hz], [25Hz], or [24Hz] when [1920x1080p] is selected for [RESOLUTION].
- Select [60Hz], [50Hz], or [48Hz] when [1920x1080i] is selected for [RESOLUTION].
- Select [60Hz] or [50Hz] when anything other than [1920x1080p] or [1920x1080i] is selected for [RESOLUTION].

10) Press the <ENTER> button.

- The confirmation screen is displayed.

11) Press ◀▶ to select [OK], and press the <ENTER> button.

Note

- The setting details are displayed in [RESOLUTION] and [VERTICAL SCAN FREQUENCY] of [EDID STATUS].
- The resolution and vertical scanning frequency settings may also be required on your computer or video device.
- After configuring settings, your computer or video device or the projector may be required to be turned off and on.

- A signal may not be output with the resolution and vertical scanning frequency that have been set, depending on your computer or video device.

[DIGITAL LINK IN]

Sets the signal level when DIGITAL LINK input is selected.

1) Press ▲▼ to select [DIGITAL LINK IN].

2) Press the <ENTER> button.
- The **[DIGITAL LINK IN]** screen is displayed.

3) Press ▲▼ to select [SIGNAL LEVEL].

4) Press ◀▶ to switch the item.
- The items will switch each time you press the button.

[AUTO]	Automatically sets the signal level.
[64-940]	Select this item when the signal output from the HDMI terminal of an external device (Blu-ray disc player, etc.) is input to the <DIGITAL LINK/LAN> terminal via a twisted-pair-cable transmitter.
[0-1023]	Select this item when the signal output from the DVI-D terminal or HDMI terminal of an external device (such as a computer) is input to the <DIGITAL LINK/LAN> terminal via a twisted-pair-cable transmitter.

Note

- The optimal setting varies depending on the output setting of the connected external device. Refer to the operating instructions of the external device regarding the output of the external device.
- The signal level is displayed for 30 bits of input.

Setting [EDID MODE]

1) Press ▲▼ to select [DIGITAL LINK IN].

2) Press the <ENTER> button.
- The **[DIGITAL LINK IN]** screen is displayed.

3) Press ▲▼ to select [EDID MODE].

4) Press the <ENTER> button.
- The **[DIGITAL LINK EDID MODE]** screen is displayed.

5) Press ◀▶ to switch [EDID MODE].
- The items will switch each time you press the button.

[DEFAULT]	Standard setting.
[SCREEN FIT]*1	Changes EDID data according to the [SCREEN FORMAT] setting.
[USER]	Sets the [RESOLUTION] and [VERTICAL SCAN FREQUENCY] items to EDID.

*1 Only for PT-DZ21K2, PT-DS20K2, PT-DZ16K2

- When [DEFAULT] or [SCREEN FIT] is selected, proceed to Step **10)**.

6) Press the <ENTER> button.
- The **[RESOLUTION]** screen is displayed.

7) Press ▲▼◀▶ to select [RESOLUTION].
- Select [1024x768p], [1280x720p], [1280x768p], [1280x800p], [1280x1024p], [1366x768p], [1400x1050p], [1440x900p], [1600x900p], [1600x1200p], [1680x1050p], [1920x1080p], [1920x1080i], or [1920x1200p].

8) Press the <ENTER> button.
- The **[VERTICAL SCAN FREQUENCY]** screen is displayed.

9) Press ◀▶ to select [VERTICAL SCAN FREQUENCY].
- Select [60Hz], [50Hz], [30Hz], [25Hz], or [24Hz] when [1920x1080p] is selected for [RESOLUTION].
- Select [60Hz], [50Hz], or [48Hz] when [1920x1080i] is selected for [RESOLUTION].
- Select [60Hz] or [50Hz] when anything other than [1920x1080p] or [1920x1080i] is selected for [RESOLUTION].

10) Press the <ENTER> button.

- The confirmation screen is displayed.

11) Press ◀▶ to select [OK], and press the <ENTER> button.

Note

- The setting details are displayed in [RESOLUTION] and [VERTICAL SCAN FREQUENCY] of [EDID STATUS].
- The resolution and vertical scanning frequency settings may also be required on your computer or video device.
- After configuring settings, your computer or video device or the projector may be required to be turned off and on.
- A signal may not be output with the resolution and vertical scanning frequency that have been set, depending on your computer or video device.

[SDI IN]

(Only for PT-DZ21K2, PT-DS20K2, PT-DZ16K2)

Set this function in accordance with the signal input to the <SDI IN 1>/<SDI IN 2> terminal (PT-DZ21K2, PT-DS20K2) or the <SDI IN> terminal (PT-DZ16K2).

Setting [SDI LINK]

(Only for PT-DZ21K2, PT-DS20K2)

1) Press ▲▼ to select [SDI IN].

2) Press the <ENTER> button.

- The **[SDI IN]** screen is displayed.

3) Press ▲▼ to select [SDI LINK].

4) Press ◀▶ to switch the item.

[SINGLE LINK]	Sets the SDI1 input and the SDI2 input to single link.
[DUAL LINK]	Sets the SDI1 input and the SDI2 input to dual link.
[AUTO]	Automatically selects the single link or the dual link.

Note

- [SDI LINK] cannot be set when [BACKUP INPUT MODE] is set to [2].
- When [AUTO] is set, either single link or dual link will be automatically selected by reading the payload ID added to the input signal. Single link will be selected when a payload ID is not added to the input signal.

Setting [SIGNAL LEVEL]

Select the amplitude of the signal to input.

1) Press ▲▼ to select [SDI IN].

2) Press the <ENTER> button.

- The **[SDI IN]** screen is displayed.

3) Press ▲▼ to select [SIGNAL LEVEL].

4) Press ◀▶ to switch the item.

[64-940]	Normally use this setting.
[4-1019]	Select this item when gray is displayed as black.

Setting [BIT DEPTH]

1) Press ▲▼ to select [SDI IN].

2) Press the <ENTER> button.

- The **[SDI IN]** screen is displayed.

3) Press ▲▼ to select [BIT DEPTH].

4) Press ◀▶ to switch the item.

[AUTO]	Automatically select [12-bit] or [10-bit].
[12-bit]	Fixes to [12-bit].
[10-bit]	Fixes to [10-bit].

Setting [3G-SDI MAPPING]

1) **Press ▲▼ to select [SDI IN].**

2) **Press the <ENTER> button.**
   - The **[SDI IN]** screen is displayed.

3) **Press ▲▼ to select [3G-SDI MAPPING].**

4) **Press ◀▶ to switch the item.**

[AUTO]	Automatically select [LEVEL A] or [LEVEL B].
[LEVEL A]	Fixes to [LEVEL A].
[LEVEL B]	Fixes to [LEVEL B].

Note

- This does not operate when the SD-SDI signal or the HD-SDI signal is input.

[ON-SCREEN DISPLAY]

Set the on-screen display.

Setting [OSD POSITION]

Set the position of the menu screen (OSD).

1) **Press ▲▼ to select [ON-SCREEN DISPLAY].**

2) **Press the <ENTER> button.**
   - The **[ON-SCREEN DISPLAY]** screen is displayed.

3) **Press ▲▼ to select [OSD POSITION].**

4) **Press ◀▶ to switch the item.**
   - The items will switch each time you press the button.

[2]	Sets to the center left of the screen.
[3]	Sets to the bottom left of the screen.
[4]	Sets to the top center of the screen.
[5]	Sets to the center of the screen.
[6]	Sets to the bottom center of the screen.
[7]	Sets to the upper right of the screen.
[8]	Sets to the center right of the screen.
[9]	Sets to the bottom right of the screen.
[1]	Sets to the upper left of the screen.

Setting [OSD ROTATION]

(Only for PT-DZ21K2, PT-DS20K2, PT-DW17K2)
Set the orientation of the menu screen (OSD).

1) **Press ▲▼ to select [ON-SCREEN DISPLAY].**

2) **Press the <ENTER> button.**
   - The **[ON-SCREEN DISPLAY]** screen is displayed.

3) **Press ▲▼ to select [OSD ROTATION].**

4) **Press ◀▶ to switch the item.**
   - The items will switch each time you press the button.

[OFF]	Does not rotate the screen.
[CLOCKWISE]	Rotates the screen by 90° clockwise.
[COUNTERCLOCKWISE]	Rotates the screen by 90° counterclockwise.

Setting [OSD DESIGN]

Set the color of the menu screen (OSD).

1) **Press ▲▼ to select [ON-SCREEN DISPLAY].**

2) **Press the <ENTER> button.**
   - The **[ON-SCREEN DISPLAY]** screen is displayed.

3) **Press ▲▼ to select [OSD DESIGN].**

4) **Press ◀▶ to switch the item.**
   - The items will switch each time you press the button.

[1]	Sets to yellow.
[2]	Sets to blue.
[3]	Sets to white.
[4]	Sets to green.
[5]	Sets to peach.
[6]	Sets to brown.

Setting [OSD MEMORY]

Set hold for the position of the menu screen (OSD) cursor.

1) **Press ▲▼ to select [ON-SCREEN DISPLAY].**

2) **Press the <ENTER> button.**
   - The **[ON-SCREEN DISPLAY]** screen is displayed.

3) **Press ▲▼ to select [OSD MEMORY].**

4) **Press ◀▶ to switch the item.**
   - The items will switch each time you press the button.

[ON]	Holds the cursor position.
[OFF]	Does not hold the cursor position.

Note

- Even if [OSD MEMORY] is set to [ON], the cursor position will not be held when the <MAIN POWER> switch of the projector body is turned <OFF>.

Setting [INPUT GUIDE]

Set whether to display the input guide (input terminal name, signal name, memory number, and [BACKUP INPUT STATUS] currently selected) in the position set in [OSD POSITION].

1) **Press ▲▼ to select [ON-SCREEN DISPLAY].**

2) **Press the <ENTER> button.**
   - The **[ON-SCREEN DISPLAY]** screen is displayed.

3) **Press ▲▼ to select [INPUT GUIDE].**

4) **Press ◀▶ to switch the item.**
   - The items will switch each time you press the button.

[ON]	Displays the input guide.
[OFF]	Hides the input guide.

Setting [WARNING MESSAGE]

Set the display/hide of the warning message.

1) Press ▲▼ to select [ON-SCREEN DISPLAY].

2) Press the <ENTER> button.
- The **[ON-SCREEN DISPLAY]** screen is displayed.

3) Press ▲▼ to select [WARNING MESSAGE].

4) Press ◀▶ to switch the item.
- The items will switch each time you press the button.

[ON]	Displays the warning message.
[OFF]	Hides the warning message.

[IMAGE ROTATION]

(Only for PT-DZ21K2, PT-DS20K2, PT-DW17K2)
Set whether to rotate the input image when projecting.

1) Press ▲▼ to select [IMAGE ROTATION].

2) Press ◀▶ to select an item.
- The items will switch each time you press the button.

[OFF]	Projects the input image without rotating.
[CLOCKWISE]	Rotates the input image by 90° clockwise and project it.
[COUNTERCLOCKWISE]	Rotates the input image by 90° counterclockwise and project it.

Note

- [IMAGE ROTATION] is disabled while displaying 3D image, displaying image in simultaneous format, and during P IN P.
- The on-screen display orientation does not change even when [IMAGE ROTATION] is set to other than [OFF]. Set the [DISPLAY OPTION] menu → [ON-SCREEN DISPLAY] → [OSD ROTATION] (➡ page 119) as necessary.

[BACK COLOR]

Set the display of the projected screen when there is no signal input.

1) Press ▲▼ to select [BACK COLOR].

2) Press ◀▶ to switch the item.
- The items will switch each time you press the button.

[BLUE]	Displays the entire projection area in blue.
[BLACK]	Displays the entire projection area in black.
[DEFAULT LOGO]	Displays the Panasonic logo.
[USER LOGO]	Displays the image registered by the user.

Note

- To create/register the [USER LOGO] image, use “Logo Transfer Software” included in the supplied CD-ROM.

[STARTUP LOGO]

Set the logo display when the power is turned on.

1) Press ▲▼ to select [STARTUP LOGO].

2) Press ◀▶ to switch the item.
- The items will switch each time you press the button.

[DEFAULT LOGO]	Displays the Panasonic logo.
[USER LOGO]	Displays the image registered by the user.
[NONE]	Disables the startup logo display.

Note

- The startup logo will disappear in approximately 15 seconds.
- To create/register the [USER LOGO] image, use “Logo Transfer Software” included in the supplied CD-ROM.

[UNIFORMITY]

Correct the brightness and color unevenness of the entire screen.

Setting each color

1) Press ▲▼ to select [UNIFORMITY].

2) Press the <ENTER> button.

- The **[UNIFORMITY]** screen is displayed.

3) Press ▲▼ to select [WHITE], [RED], [GREEN], or [BLUE].

4) Press ◀▶ to adjust the level.

Item	Operation	Adjustment	Range of adjustment
[VERTICAL]	Press ▶.	The lower-side color becomes pale, or the upper-side color becomes dark.	–127 - +127
	Press ◀.	The upper-side color becomes pale, or the lower-side color becomes dark.	
[HORIZONTAL]	Press ▶.	The left-side color becomes pale, or the right-side color becomes dark.	
	Press ◀.	The right-side color becomes pale, or the left-side color becomes dark.	

Setting [PC CORRECTION]

(Only for PT-DZ21K2, PT-DS20K2)
To use the [PC CORRECTION] function, the optional Upgrade Kit (Model No.: ET-UK20) is required. To purchase the product, consult your dealer.

1) Press ▲▼ to select [UNIFORMITY].

2) Press the <ENTER> button.

- The **[UNIFORMITY]** screen is displayed.

3) Press ▲▼ to select [PC CORRECTION].

4) Press ◀▶ to switch the item.

[OFF]	Does not perform correction using a computer.
[ON]*1	Performs correction for the brightness and color unevenness of the entire screen using a computer.

*1 Advanced skills are necessary to use computer control correction. Consult your dealer.

Note

- [UNIFORMITY] can be set for each [LAMP SELECT] setting.
- The [UNIFORMITY] setting value will not return to factory default even if [ALL USER DATA] is executed from the [PROJECTOR SETUP] menu → [INITIALIZE] (➡ page 143).

[SHUTTER SETTING]

Set image fade-in and fade-out when the shutter function operates. Also, the shutter function can be automatically enabled/disabled (shutter: closed/open) when the power is turned off/on.

Setting [FADE-IN] or [FADE-OUT]

1) Press ▲▼ to select [SHUTTER SETTING].

2) **Press the <ENTER> button.**
   - The **[SHUTTER SETTING]** screen is displayed.

3) **Press ▲▼ to select [FADE-IN] or [FADE-OUT].**

4) **Press ◀▶ to switch the item.**

Item		Adjustment
[FADE-IN] [FADE-OUT]	[OFF]	Does not set fade-in or fade-out.
	[0.5s] - [10.0s]	Sets the fade-in or fade-out time. Select an item from [0.5s] to [4.0s], [5.0s], [7.0s], and [10.0s]. Items from [0.5s] to [4.0s] can be selected in increments of 0.5.

Note

- Press the <SHUTTER> button on the remote control or the control panel during fade-in or fade-out to cancel the fade operation.

Setting [STARTUP]

1) **Press ▲▼ to select [SHUTTER SETTING].**

2) **Press the <ENTER> button.**
   - The **[SHUTTER SETTING]** screen is displayed.

3) **Press ▲▼ to select [STARTUP].**

4) **Press ◀▶ to switch the item.**

[OPEN]	Starts projection with the shutter function disabled (shutter: open) when the power is turned on.
[CLOSE]	Starts projection with the shutter function enabled (shutter: closed) when the power is turned on.

Setting [SHUT-OFF]

1) **Press ▲▼ to select [SHUTTER SETTING].**

2) **Press the <ENTER> button.**
   - The **[SHUTTER SETTING]** screen is displayed.

3) **Press ▲▼ to select [SHUT-OFF].**

4) **Press ◀▶ to switch the item.**

[LAST USED]	When the projector is switched off, the projector turns into standby with the shutter status left as is.
[OPEN]	When the projector is switched off, the projector turns into standby with the shutter left opened.
[CLOSE]	When the projector is switched off, the projector turns into standby with the shutter left closed.

[FREEZE]

Pause the projected image temporarily regardless of the playback of the external device.

1) **Press ▲▼ to select [FREEZE].**

2) **Press the <ENTER> button.**
   - Press the <MENU> button to release.

Note

- [FREEZE] is displayed on the screen when video is paused.

[WAVEFORM MONITOR]

Use the input signals from a connected external device to display in a waveform. Check whether video output (luminance) signal level is within the recommended range for the projector and adjust.

1) **Press ▲▼ to select [WAVEFORM MONITOR].**

2) **Press ◀▶ to switch the item.**

[OFF]	Does not display the waveform monitor.
[ON]	Displays the waveform monitor.

3) Press the <MENU> button two times to clear.

4) Press ▲▼ to select any horizontal line.

5) Press the <ENTER> button to switch the Select line to either luminance, red, green, or blue.

- Line selection items switch each time the <ENTER> is pressed only when the waveform monitor is displayed.

“Select line (luminance)”	Displayed in white waveform.
“Select line (red)”	Displayed in red waveform.
“Select line (green)”	Displayed in green waveform.
“Select line (blue)”	Displayed in blue waveform.

Note

- Setting is also available with [FUNCTION BUTTON] (➡ page 139).
- Waveform monitor cannot be displayed while in [P IN P].
- The waveform monitor turns off when [P IN P] is executed during waveform monitoring.
- The waveform monitor is not displayed when on-screen display is hidden (off).
- Use [3D WAVEFORM MONITOR] to display waveform monitor with 3D image. (Only for PT-DZ21K2, PT-DS20K2)

Adjusting the waveform

Project the luminance adjustment signal of a commercial test disk (0 % (0 IRE or 7.5 IRE) – 100 % (100 IRE)) and adjust.

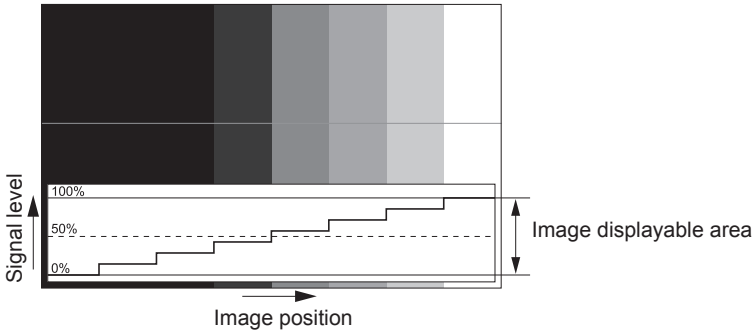

1) Select “Select line (luminance)” on the waveform monitor.

2) Adjust black level.

- Use [BRIGHTNESS] in the on-screen menu [PICTURE] to adjust the black level 0 % of the video signal to the 0 % position of the waveform monitor.

3) Adjust white level.

- Use [CONTRAST] in the on-screen menu [PICTURE] to adjust the white level 100 % of the video signal to the 100 % position of the waveform monitor.

Adjusting red, green, and blue

1) Set [COLOR TEMPERATURE] to [USER1] or [USER2] (➡ page 84).

2) Select “Select line (red)” on the waveform monitor.

3) Adjust dark red areas.

- Use [RED] in [WHITE BALANCE LOW] to adjust the black level 0 % of the video signal to the 0 % position of the waveform monitor.

4) Adjust bright red areas.

- Use [RED] in [WHITE BALANCE HIGH] to adjust the white level 100 % of the video signal to the 100 % position of the waveform monitor.

5) Use the procedure for [RED] to adjust [GREEN] and [BLUE].

Note

- For DVI-D signal, HDMI signal, SDI signal, and DIGITAL LINK signal, confirm that the [SIGNAL LEVEL] setting is correct before black level adjustment. (SDI signal is supported only for PT-DZ21K2, PT-DS20K2, PT-DZ16K2)

[CUT OFF]

Each red, green, and blue color component can be removed.

1) Press ▲▼ to select [CUT OFF].

2) Press the <ENTER> button.

- The **[CUT OFF]** screen is displayed.

3) Press ▲▼ to select [RED], [GREEN], or [BLUE].

4) Press ◀▶ to switch the item.

[OFF]	Disables cutoff.
[ON]	Enables cutoff.

Note

- When input is switched or a signal is switched, the cutoff setting returns to its original setting (off).

[PROJECTOR SETUP] menu

On the menu screen, select [PROJECTOR SETUP] from the main menu, and select an item from the sub-menu.
Refer to "Navigating through the menu" (➡ page 77) for the operation of the menu screen.

[PROJECTOR ID]

The projector has an ID number setting function that can be used when multiple projectors are used side by side to enable simultaneous control or individual control via a single remote control.

1) Press ▲▼ to select [PROJECTOR ID].

2) Press ◀▶ to switch the item.

- The items will switch each time you press the button.

[ALL]	Select this item when controlling projectors without specifying an ID number.
[1] - [64]	Select this item when specifying an ID number to control individual projector.

Note

- To specify an ID number for individual control, the ID number of a remote control must match the ID number of the projector.
- When the ID number is set to [ALL], the projector will operate regardless of the ID number specified during remote control or computer control.
  If multiple projectors are set up side by side with IDs set to [ALL], they cannot be controlled separately from the projectors with other ID numbers.
- Refer to "Setting ID number of the remote control" (➡ page 75) for how to set the ID number on the remote control.

[PROJECTION METHOD]

Set the projection method in accordance with the installation status of the projector.
Change the projection method if the screen display is upside down or inverted.

1) Press ▲▼ to select [PROJECTION METHOD].

2) Press ◀▶ to switch the item.

- The items will switch each time you press the button.

[FRONT/FLOOR]	When installing the projector on the desk, etc., in front of the screen
[FRONT/CEILING]	When installing the projector in front of the screen using the Ceiling mount bracket (optional)
[REAR/FLOOR]	When installing the projector on the desk, etc., behind the screen (with a translucent screen)
[REAR/CEILING]	When installing the projector behind the screen (with a translucent screen) using the Ceiling mount bracket (optional)

[LAMP SELECT]

Select the lamp to be lit from the four built-in luminous lamps according to the use conditions or purposes.

1) Press ▲▼ to select [LAMP SELECT].

2) Press ◀▶ to switch the item.

[L1]	Lamp 1 will light.
[L2]	Lamp 2 will light.
[L3]	Lamp 3 will light.
[L4]	Lamp 4 will light.
[L1/L4]	Lamps 1 and 4 will light.
[L2/L3]	Lamps 2 and 3 will light.
[L1/L2/L3]	Lamps 1, 2, and 3 will light.
[L1/L2/L4]	Lamps 1, 2, and 4 will light.
[L1/L3/L4]	Lamps 1, 3, and 4 will light.
[L2/L3/L4]	Lamps 2, 3, and 4 will light.
[SINGLE]	One lamp will light. (The lamp with shorter runtime will automatically light.)
[DUAL]	Two lamps will light. (The lamps with shorter runtime will automatically light.)
[TRIPLE]	Three lamps will light. (The lamps with shorter runtime will automatically light.)

[QUAD]	Four lamps will light.

3) Press the <ENTER> button.

Note

- For a certain period of time after [LAMP SELECT] is switched, [LAMP SELECT] cannot be switched again, because the speed of the lamp replacement cycle will increase. Repeatedly switching [LAMP SELECT] in a short time will also increase the speed of the lamp replacement cycle.
- The colors of the items indicate the status.

Green	Current setting
Yellow	Current setting (when there is a lamp that cannot turn on or failed to turn on)
Red	Lamp that has failed to turn on
White	Any other status

- If the setting is other than [QUAD], the lamp that has gone out or the runtime has exceeded 3 000 hours*1 is turned off, and another lamp is turned on. If the setting is [QUAD], the lamp that has gone out or exceeded runtime of 3 000 hours*1 is turned off, and only the lamps that have not exceeded the runtime of 3 000 hours*1 will be turned on. Also, the projector will go into standby mode when the runtimes of all lamps have exceeded 3 000 hours*1.

*1 1 000 hours when using the optional Replacement lamp unit (for portrait mode) (Model No.: ET-LAD520P (1 pc), ET-LAD520PF (4 pcs)). (Only for PT-DZ21K2, PT-DS20K2, PT-DW17K2)

- Ensure that lamp units not to be turned on are also installed.
- More lamps than the specified number of lamps light temporarily to prevent decreased illuminance when a lamp is switched.

[LAMP RELAY]

Switch the lamp to be turned on automatically by specifying the day of the week and time.
The degradation of the lamp due to continuous usage can be reduced by automatically switching the lamp to be turned on when using the projector continuously for a week or more.

1) Press ▲▼ to select [LAMP RELAY].

2) Press ◀▶ to switch the item.

[OFF]	Disables lamp relay.
[24H]	Switches the lamp daily.
[1WEEK]	Switches the lamp weekly.

- When [24H] or [1WEEK] is selected, proceed to Step **3)**.

3) Press ▲▼ to select [TIME].

4) Press the <ENTER> button.

- The projector is in the adjustment mode (the time is blinking).

5) Press ◀▶ to select “hour” or “minute”, and press ▲▼ or the number (<0> - <9>) buttons to set a time.

- Selecting “hour” allows setting of only the hour in increments of one hour, and selecting “minute” allows setting of only the minute in increments of one minute between 00 and 59.

6) Press the <ENTER> button.

- The adjusted time is established.
- When [1WEEK] is selected in Step **2)**, proceed to Step **7)**.

7) Press ▲▼ to select [DAY OF THE WEEK].

8) Press ◀▶ to switch the item.

[SUNDAY]	Switches the lamp automatically on the set day of the week.
[MONDAY]	
[TUESDAY]	
[WEDNESDAY]	
[THURSDAY]	
[FRIDAY]	
[SATURDAY]	

Note

- The [LAMP RELAY] function is enabled when [SINGLE], [DUAL], [TRIPLE], or [QUAD] is selected in [LAMP SELECT].
- When [SINGLE] or [DUAL] is selected in [LAMP SELECT], lamps are switched at the specified time. When [TRIPLE] is selected in [LAMP SELECT], lamps are switched three times every two hours after the specified time, and then the previous status is maintained until the next specified time.
  When [QUAD] is selected in [LAMP SELECT], three lamps light after the specified time, and three lamps to be lit are switched four times every two hours. Eight hours after the specified time, four lamps light, and from the next specified time, three lamps are lit and switched again.
- The operating time will be the local time. (➡ page 139)

[BRIGHTNESS CONTROL]

The projector is equipped with a luminance sensor to measure brightness and color of the lamp, and corrects brightness and color of the projected image according to the changes in brightness and color of the lamp.
By using this function, it is possible to reduce the changes of brightness and color of the entire multiple screen, or hold down the differences of the brightness and color, making it possible to maintain uniformity when constructing multiple screen using multiple projectors.

Setting [BRIGHTNESS CONTROL GAIN]

Adjust the brightness when displaying multiple screens using multiple projectors.

1) Press ▲▼ to select [BRIGHTNESS CONTROL].

2) Press the <ENTER> button.
- The **[BRIGHTNESS CONTROL]** screen is displayed.

3) Press ▲▼ to select [BRIGHTNESS CONTROL GAIN].

4) Press ◀▶ to adjust.

Operation	Adjustment		Range of adjustment
	Brightness	Maximum amount of brightness correction	
Press ▶.	The screen becomes brighter.	The maximum amount of correction is reduced.	20 % - 100 %
Press ◀.	The screen becomes darker.	The maximum amount of correction is increased.	

Note

- When using only one projector, the value obtained by subtracting the value of the [BRIGHTNESS CONTROL GAIN] from 100 % is the maximum amount of brightness correction. Brightness cannot be corrected through brightness control since the maximum amount of correction becomes 0 % when [BRIGHTNESS CONTROL GAIN] is at 100 %.
- Brightness will be unsteady for eight minutes after a lamp is turned on. Adjust the brightness at least eight minutes after starting projection.
- The result of [BRIGHTNESS CONTROL GAIN] adjustments is reflected on all image signals, internal test patterns, and on-screen menus.
- The [BRIGHTNESS CONTROL GAIN] setting is enabled even if [BRIGHTNESS CONTROL SETUP] is [OFF].

Setting [BRIGHTNESS CONTROL SETUP]

Set brightness control operation.

1) Press ▲▼ to select [BRIGHTNESS CONTROL].

2) Press the <ENTER> button.
- The **[BRIGHTNESS CONTROL]** screen is displayed.

3) Press ▲▼ to select [BRIGHTNESS CONTROL SETUP].

4) Press the <ENTER> button.
- The **[BRIGHTNESS CONTROL SETUP]** screen is displayed.

5) Press ▲▼ to select [MODE].

6) Press ◀▶ to switch the item.
- The items will switch each time you press the button.

[OFF]	Does not correct the brightness of the screen by the brightness sensor.

[AUTO]	Corrects the brightness of the screen by the brightness sensor. Automatically corrects screen brightness when lamp brightness changes.
[PC]	Synchronizes nine or more projectors using a computer and dedicated software “Multi Monitoring & Control Software”*1.

*1 “Multi Monitoring & Control Software” is included in the supplied CD-ROM.

- When [PC] is selected, proceed to Step **11)**.

7) Press ▲▼ to select [LINK].

8) Press ◀▶ to switch the item.

- The items will switch each time you press the button.

[OFF]	Performs corrections by the brightness sensor on a single projector without synchronizing with the other projectors. The period, in which the constant brightness kept by the small value of [BRIGHTNESS CONTROL GAIN], is prolonged.
[GROUP A] [GROUP B] [GROUP C] [GROUP D]	Synchronizes corrections in multiple projectors by the brightness sensor. You can set up to four groups (A to D) within the same subnet by using the network function. You can also register and synchronize up to eight projectors in one group.

9) Press ▲▼ to select [CHROMA CORRECTION].

10) Press ◀▶ to switch the item.

- The items will switch each time you press the button.

[OFF]	Corrects only brightness.
[ON]	Corrects both brightness and color.

11) Press ▲▼ to select [CALIBRATION TIME].

12) Press the <ENTER> button.

- The projector is in the adjustment mode (the time is blinking).

13) Press ◀▶ to select “hour” or “minute”, and press ▲▼ or the number (<0> - <9>) buttons to set a time.

- Selecting “hour” allows setting of only the hour in increments of one hour, and selecting “minute” allows setting of only the minute in increments of one minute between 00 and 59.
- When the time is not specified, select [OFF] between 23 and 00 of the hour, or between 59 and 00 of the minute.

14) Press the <ENTER> button.

- [CALIBRATION TIME] is set.
- Brightness and color are measured at the specified time. Dynamic iris is fixed to open during measurement.

15) Press ▲▼ to select [CALIBRATION MESSAGE].

16) Press ◀▶ to switch the item.

- The items will switch each time you press the button.

[ON]	Displays messages during calibration.
[OFF]	Does not display messages during calibration.

17) Press ▲▼ to select [APPLY].

18) Press the <ENTER> button.

- The set [MODE] and [LINK] are enabled, and LAMP RELAY screen alert is displayed when the [LAMP RELAY] setting is [OFF]. When [CALIBRATION MESSAGE] is set to [ON], a calibration running message is displayed which will automatically disappear 30 seconds after calibration completes.
- If the <ENTER> button is pressed with [MODE] in [BRIGHTNESS CONTROL SETUP] set to other than [OFF], the brightness and color of the lamp at the time the button was pressed is recorded as a standard.

- If the <ENTER> button is pressed when [LINK] is set from [GROUP A] to [GROUP D], the group name is displayed on the screens of projectors that have been set in the same group.

Note

- When [MODE] in [BRIGHTNESS CONTROL SETUP] is set to [AUTO] or [PC], keep the shutter function disabled (shutter: open) for at least two minutes to perform the brightness sensor calibration after the [BRIGHTNESS CONTROL SETUP] setting has been completed.
- When the projector is operating with [MODE] in [BRIGHTNESS CONTROL SETUP] set to [AUTO] or [PC], brightness and color cannot be measured if the shutter function is enabled (shutter: closed) within 10 minutes after the lamp has turned on. Therefore, brightness may be corrected approximately two minutes after the shutter function is disabled (shutter: open).
- When [MODE] in [BRIGHTNESS CONTROL SETUP] is set to [AUTO] or [PC], the lamp brightness and color are automatically measured eight minutes after the lamp is turned on, and correction is performed so that the image brightness and color will be the same as the standard brightness and color at the time the brightness control are adjusted. Brightness and color of the lamp cannot be measured for eight minutes after the lamp has turned on because they are not steady.
- If the lamp has gone off or lamp relay is performed while two or more lamps are selected to be lit in [LAMP SELECT] and [MODE] in [BRIGHTNESS CONTROL SETUP] is set to [AUTO], brightness and color are corrected to the extent possible approximately one minute later.
- When the projector is operating with [MODE] in [BRIGHTNESS CONTROL SETUP] set to [AUTO] and [LINK] set to [OFF], brightness is corrected until it reaches the maximum correction value.
- The variation in brightness may increase due to dust accumulating on the lens, screen, or inside the projector, depending on the installation environment of the projector.
- Adjust brightness control again when lamp degradation causes increased variation in brightness or a lamp is replaced.
- For continued use longer than 24 hours, set [CALIBRATION TIME] in [BRIGHTNESS CONTROL SETUP], or set [LAMP RELAY] (➡ page 127). If it is not set, correction will not be performed automatically.
- Brightness control and dynamic iris operate simultaneously, but the iris is fully open and does not operate while brightness and color are measured.
- The [CALIBRATION TIME] setting will be reflected at the time when you enter the time.
- The [CALIBRATION MESSAGE] setting will be reflected at the time when the item is switched using ◀▶.

Displaying [BRIGHTNESS CONTROL STATUS]

Display the brightness control status.

1) Press ▲▼ to select [BRIGHTNESS CONTROL].

2) Press the <ENTER> button.
- The **[BRIGHTNESS CONTROL]** screen is displayed.

3) Press ▲▼ to select [BRIGHTNESS CONTROL STATUS].

4) Press the <ENTER> button.
- The **[BRIGHTNESS CONTROL STATUS]** screen is displayed.

[BRIGHTNESS CONTROL STATUS] screen display example

When [MODE] of [BRIGHTNESS CONTROL SETUP] is set to [OFF]

The screen shows the status that the brightness control is disabled.

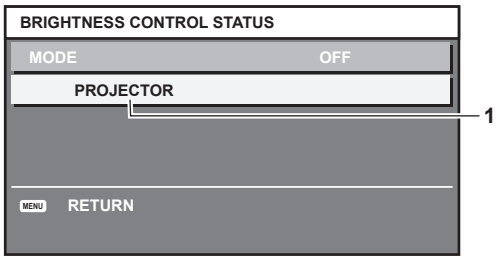

When [MODE] of [BRIGHTNESS CONTROL SETUP] is set to [AUTO] and [LINK] is set to [OFF]

The screen shows the status of the brightness control in one projector.

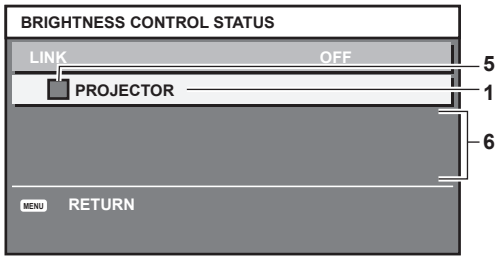

When [MODE] of [BRIGHTNESS CONTROL SETUP] is set to [AUTO] and [LINK] is set from [GROUP A] to [GROUP D]

The screen shows the status of the brightness control of synchronized projectors (up to eight units), including the projector being controlled through the on-screen menu.

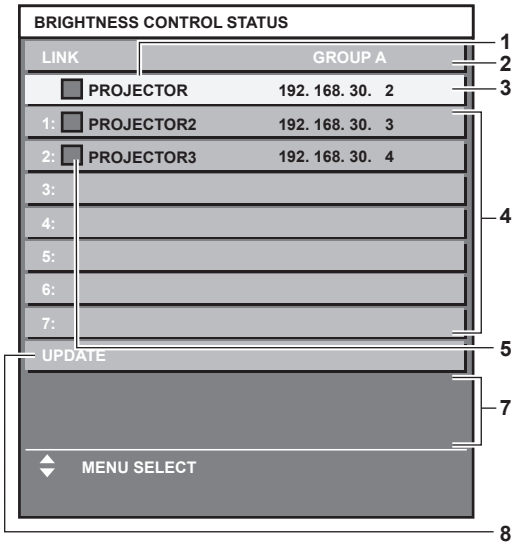

When [MODE] of [BRIGHTNESS CONTROL SETUP] is set to [PC]

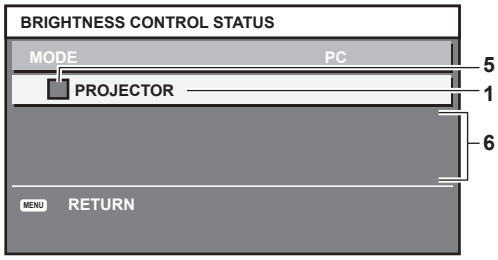

1 **Display the name of the projector.**

2 **Display the synchronized group.**

3 **Display the IP address of the projector.**

4 **Display the names and IP addresses of projectors in same group detected over the network.**

5 **Display the status by color.**
Green: There is an allowance for brightness correction.
Yellow: There is little allowance for brightness correction.
Red: There is a brightness control error.

6 **Display error detailed messages.**

7 **Display error messages.**
When the message [Failed to apply BRIGHTNESS CONTROL to some projectors.] appears, it means that synchronization with the projector displayed in red has failed.
Press ▲▼ to select the projector displayed in red, and press the <ENTER> button to display the error details.

8 **Update to the latest status information.**

■ Error details

Error message	Measures to take
[Exceed maximum number of projectors.]	• Limit the number of projectors in one group to eight. • To synchronize nine or more projectors, use a PC and the dedicated software “Multi Monitoring & Control Software”*1.
[Please check the COMMAND CONTROL setting.]	• Set [NETWORK CONTROL] → [COMMAND CONTROL] to [ON] for the projector in error. • Set [NETWORK CONTROL] → [COMMAND PORT] of all projectors to be linked to the same value.
[Please check the USER NAME and PASSWORD in the COMMAND CONTROL setting.]	• Assign the same [User name] and [Password] strings that have web control administrator rights to all projectors to be linked.
[Cannot apply BRIGHTNESS CONTROL. Please check projector status.]	• The projector is in standby. Switch on the power.
[Brightness Sensor Error]	• There is a problem with the brightness sensor. If problems persist even after switching on the power, consult your dealer.

*1 “Multi Monitoring & Control Software” is included in the supplied CD-ROM.

Note

- If the synchronized projectors are not displayed in the list, check the following:
  - Are there devices with the same IP address on the network?
  - Are the LAN cables connected correctly? (➡ page 158)
  - Are the subnets of the projectors the same?
  - Are the same [LINK] settings applied to a group?
- Refer to [NETWORK SETUP] (➡ page 155) or “[Network config] page” (➡ page 167) on how to change the projector name.

Brightness control adjustment procedure example

The steps exemplify an adjustment to link the brightness of eight projectors connected in a network.

1) Connect all projectors to the hub using LAN cables. (➡ page 158)

2) Switch on all projectors and start projection.

3) Make the setting of [LAMP SELECT] of all projectors the same so that the number of lamps to be lit are the same.

4) Set [MODE] of [BRIGHTNESS CONTROL SETUP] to [OFF], and select [APPLY], and then press the <ENTER> button.

5) Set [SUBNET MASK] and [IP ADDRESS] in each projector.
- To be able to communicate over the network, set the same value in [SUBNET MASK] for all projectors and set a different value in [IP ADDRESS] for each projector.

6) Wait for at least eight minutes after starting projection until the lamp brightness becomes steady.

7) Set all items in the [PICTURE] menu of all projectors to the same values.

8) Adjust [COLOR MATCHING] to match colors.

9) Display the internal test pattern “All white” in all projectors.

10) Set [BRIGHTNESS CONTROL GAIN] to 100 % in all projectors.

11) Set [BRIGHTNESS CONTROL GAIN] to 90 % in the projector with the least brightness.

12) Adjust [BRIGHTNESS CONTROL GAIN] in each projector.
- Adjust [BRIGHTNESS CONTROL GAIN] of all the other projectors so that the brightness is matched to the projector of which [BRIGHTNESS CONTROL GAIN] is set to 90 %.

13) Set [MODE] of [BRIGHTNESS CONTROL SETUP] to [AUTO], and [LINK] to [GROUP A] in all projectors.

14) Select [APPLY] of [BRIGHTNESS CONTROL SETUP] and press the <ENTER> button in all projectors.
- Brightness control starts.

Note

- Brightness is automatically corrected each time the lamp lights when the power is switched on or off.
- Adjust brightness control again when lamp degradation causes increased variation in brightness or when the lamp is replaced.

[STANDBY MODE]

Set the power consumption during the standby.

1) Press ▲▼ to select [STANDBY MODE].

2) Press ◀▶ to switch the item.

- The items will switch each time you press the button.

[NORMAL]	Select this item to use the network function during standby.
[ECO]	Select this item to reduce power consumption during standby.

Note

- When [ECO] is set, the AC voltage monitor function, the network function, the <SERIAL OUT> terminal, and part of the RS-232C command cannot be used during standby. Also, lighting of the connecting terminals and the control panel is not turned on.
  When an error or warning occurs on the projector, the self-diagnosis display appears on the control panel regardless of the [STANDBY MODE] settings. (➡ page 190)
- When [ECO] is set, it may take approximately 10 seconds longer before the projector starts projecting after the power is turned on, compared with when [NORMAL] is set.
- When [NORMAL] is set, the network function and the <SERIAL OUT> terminal can be used during standby.
- The [STANDBY MODE] setting will not reset to the factory default even if [ALL USER DATA] is executed from the [PROJECTOR SETUP] menu → [INITIALIZE].

[SCHEDULE]

Set the command execution schedule for each day of the week.

Enabling/disabling the schedule function

1) Press ▲▼ to select [SCHEDULE].

2) Press ◀▶ to switch the item.

- The items will switch each time you press the button.

[OFF]	Disables the schedule function.
[ON]	Enables the schedule function. Refer to “How to assign a program” (➡ page 133) or “How to set a program” (➡ page 133) for how to set the schedule.

Note

- When [SCHEDULE] is set to [ON], the [STANDBY MODE] setting is forcibly switched to [NORMAL], and the setting cannot be changed. Even if [SCHEDULE] is then set to [OFF] when in this state, the setting of [STANDBY MODE] remains at [NORMAL].

How to assign a program

1) Press ▲▼ to select [SCHEDULE].

2) Press ◀▶ to select [ON], and press the <ENTER> button.

- The **[SCHEDULE]** screen is displayed.

3) Select and assign a program to each day of week.

- Press ▲▼ to select the day of week, and press ◀▶ to select a program number.
- You can set the program from No.1 to No.7. “- - -” indicates that the program number has not been set.

How to set a program

Set up to 16 commands to each program.

1) Press ▲▼ to select [SCHEDULE].

2) Press ◀▶ to select [ON], and press the <ENTER> button.

- The **[SCHEDULE]** screen is displayed.

3) Press ▲▼ to select [PROGRAM EDIT].

4) Press ◀▶ to select a program number, and press the <ENTER> button.

5) Press ▲▼ to select a command number, and press the <ENTER> button.

- You can change the page using ◀▶.

6) Press ▲▼◀▶ to select [TIME], and press the <ENTER> button.

- The projector is in the adjustment mode (the time is blinking).

7) Press ◀▶ to select "hour" or "minute", and press ▲▼ or the number (<0> - <9>) buttons to set a time, and then press the <ENTER> button.

8) Press ▲▼◀▶ to select [COMMAND].

9) Press the <ENTER> button.

- The **[COMMAND]** detailed screen is displayed.

10) Press ▲▼ to select a [COMMAND].

- For [COMMAND] which requires detailed settings, the items of the detailed settings will switch each time you press ◀▶.
- When [INPUT] is selected, press the <ENTER> button, and then press ▲▼◀▶ to select the input to be set.

[COMMAND]	Detailed settings of [COMMAND]	Description
[POWER ON]	—	Switches on the projector.
[STANDBY]	—	Enters standby.
[SHUTTER]	[OPEN]	Disables the shutter function (shutter: open).
	[CLOSE]	Enables the shutter function (shutter: closed).
[INPUT]	[RGB1]	Switches the input to RGB1.
	[RGB2]	Switches the input to RGB2.
	[DVI-D]	Switches the input to DVI-D.
	[HDMI]	Switches the input to HDMI.
	[DIGITAL LINK]	Switches the input to DIGITAL LINK.
	[SDI1]*1	Switches the input to SDI1.
	[SDI]*2	Switches the input to SDI.
	[SDI2]*1	Switches the input to SDI2.
	[INPUT1] - [INPUT10]*3	Switches the input to DIGITAL LINK, and switches the input of the Panasonic twisted-pair-cable transmitter to the specified input.
[LAMP SELECT]	[SINGLE]	Turns on one lamp. (The lamp with shorter runtime will automatically light.)
	[DUAL]	Turns on two lamps. (The lamp with shorter runtime will automatically light.)
	[TRIPLE]	Turns on three lamps. (The lamp with shorter runtime will automatically light.)
	[QUAD]	Turns on all four lamps.
[P IN P]	[OFF]	P IN P function is not used.
	[USER1]	Lays out the sub-screen with the settings of [USER1].
	[USER2]	Lays out the sub-screen with the settings of [USER2].
	[USER3]	Lays out the sub-screen with the settings of [USER3].

*1 Only for PT-DZ21K2, PT-DS20K2

*2 Only for PT-DZ16K2

*3 When the optional DIGITAL LINK output supported device (Model No.: ET-YFB100G, ET-YFB200G) is connected to the projector, its input name is automatically reflected from [INPUT1] to [INPUT10]. If an item where the input name is not reflected is selected, the setting is disabled.

11) Press the <ENTER> button.

- The command is fixed and ● is displayed at the left of the selected command.
- After the command is fixed, press the <MENU> button to close the detailed setting screen.

12) Press ▲▼◀▶ to select [STORE], and press the <ENTER> button.

Note

- If you attempt to register the setting that would make the lamp turn on for a short time, an error message will be displayed on the screen. Set the time and command again.
- To delete a command that has been already set, press the <DEFAULT> button on the remote control while the screen in Step **5)** is displayed, or select [DELETE] at the screen in Step **6)** and press the <ENTER> button.

- If multiple commands have been set for the same time, they are executed in chronological order starting from the smallest command number.
- The operating time will be the local time. (➡ page 139)
- If an operation is executed with the remote control or control panel of the projector or with a control command before the command set in [SCHEDULE] is executed, the command set with the schedule function may not be executed.

[INITIAL STARTUP]

Set the startup method when the <MAIN POWER> switch is set to <ON>.

1) Press ▲▼ to select [INITIAL STARTUP].

2) Press ◀▶ to switch the item.

- The items will switch each time you press the button.

[LAST MEMORY]	Starts up the projector in the condition before the <MAIN POWER> switch is set to <OFF>.
[STANDBY]	Starts up the projector in standby.
[ON]	Starts projecting immediately.

[STARTUP INPUT SELECT]

Set the input when the projector is switched on to start projection.

1) Press ▲▼ to select [STARTUP INPUT SELECT].

2) Press the <ENTER> button.

- The **[STARTUP INPUT SELECT]** screen is displayed.

3) Press ▲▼◀▶ to select the input, and press the <ENTER> button.

[LAST USED]	Keeps the input selected last.
[RGB1]	Sets the input to RGB1.
[RGB2]	Sets the input to RGB2.
[DVI-D]	Sets the input to DVI-D.
[HDMI]	Sets the input to HDMI.
[DIGITAL LINK]	Sets the input to DIGITAL LINK.
[SDI1][*1]	Sets the input to SDI1.
[SDI][*2]	Sets the input to SDI.
[SDI2][*1]	Sets the input to SDI2.
[INPUT1] - [INPUT10][*3]	Sets the input to DIGITAL LINK, and switches the input of the Panasonic twisted-pair-cable transmitter to the specified input.

*1 Only for PT-DZ21K2, PT-DS20K2
*2 Only for PT-DZ16K2
*3 When the optional DIGITAL LINK output supported device (Model No.: ET-YFB100G, ET-YFB200G) is connected to the projector, its input name is automatically reflected from [INPUT1] to [INPUT10]. If an item where the input name is not reflected is selected, the setting is disabled.

Note

- When [BACKUP INPUT MODE] is set to [ON] or [1] using the [DISPLAY OPTION] menu → [BACKUP INPUT SETTING] (➡ page 111), and the power is turned off with the input set to HDMI in the pervious use, projection will start with the DVI-D input even if [STARTUP INPUT SELECT] is set to [LAST USED].
- When [BACKUP INPUT MODE] is set to [2] using the [DISPLAY OPTION] menu → [BACKUP INPUT SETTING] (➡ page 111), and the power is turned off with the input set to SDI2 in the pervious use, projection will start with the SDI1 input even if [STARTUP INPUT SELECT] is set to [LAST USED].

[RS-232C]

Set the communication conditions of the <SERIAL IN>/<SERIAL OUT> terminal. Refer to “<SERIAL IN>/<SERIAL OUT> terminal” (➡ page 201).

Setting the communication condition of the <SERIAL IN> terminal

1) Press ▲▼ to select [RS-232C].

2) Press the <ENTER> button.

- The **[RS-232C]** screen is displayed.

3) Press ▲▼ to select [INPUT SELECT].

4) Press ◀▶ to switch the item.

[PROJECTOR]	Performs the RS-232C communication with the <SERIAL IN> terminal of the projector.
[DIGITAL LINK]	Performs the RS-232C communication via the optional DIGITAL LINK output supported device (Model No.: ET-YFB100G, ET-YFB200G) and the <DIGITAL LINK/LAN> terminal.

5) Press ▲▼ to select [(IN) BAUDRATE].

6) Press ◀▶ to switch the item.

- The items will switch each time you press the button.

[9600]	Select the proper speed.
[19200]	
[38400]	

7) Press ▲▼ to select [(IN) PARITY].

8) Press ◀▶ to switch the item.

- The items will switch each time you press the button.

[NONE]	Select the parity condition.
[EVEN]	
[ODD]	

Setting the communication condition of the <SERIAL OUT> terminal

1) Press ▲▼ to select [RS-232C].

2) Press the <ENTER> button.

- The **[RS-232C]** screen is displayed.

3) Press ▲▼ to select [(OUT) BAUDRATE].

4) Press ◀▶ to switch the item.

[9600]	Select the proper speed.
[19200]	
[38400]	

5) Press ▲▼ to select [(OUT) PARITY].

6) Press ◀▶ to switch the item.

- The items will switch each time you press the button.

[NONE]	Select the parity condition.
[EVEN]	
[ODD]	

Setting the response

1) Press ▲▼ to select [RS-232C].

2) Press the <ENTER> button.

- The **[RS-232C]** screen is displayed.

3) Press ▲▼ to select [RESPONSE(ID ALL)].

4) Press ◀▶ to switch the item.

[ON]	Returns the response when an ID is designated as ALL.
[OFF]	Does not return the response when an ID is designated as ALL.

5) Press ▲▼ to select [GROUP].

6) Press ◀▶ to switch the item.

[A] - [Z]	Controls multiple projectors simultaneously by sending the ID of RS-232C. You can set groups from [A] to [Z]. The projector responds when the ID of RS-232C matches the setting.

7) Press ▲▼ to select [RESPONSE(ID GROUP)].

8) Press ◀▶ to switch the item.

[ON]	Returns the response when an ID is designated as GROUP.
[OFF]	Does not return the response when an ID is designated as GROUP.

Note

- When [INPUT SELECT] is set to [DIGITAL LINK], communication using that serial terminal is available only when the corresponding device (such as the optional DIGITAL LINK output supported device (Model No.: ET-YFB100G, ET-YFB200G)) is connected to the <DIGITAL LINK/LAN> terminal.
- When transferring logos via the optional DIGITAL LINK output supported device (Model No.: ET-YFB100G, ET-YFB200G), setting for “NO SIGNAL SLEEP” of the DIGITAL LINK output supported device should be set to “OFF” to avoid interruption of communication.
- When [INPUT SELECT] is set to [DIGITAL LINK], communication speed for input is fixed to 9 600 bps and the parity is fixed to “NONE”.

[STATUS]

Display the status of the projector.

1) Press ▲▼ to select [STATUS].

2) Press the <ENTER> button.

- The **[STATUS]** screen is displayed.

3) Press ◀▶ to switch the pages.

- The page will change each time you press the button.

[PROJECTOR TYPE]	Displays the projector type and serial number of the projector.
[PROJECTOR RUNTIME]	Displays the runtime of the projector.
[LAMP1]	Displays the runtime and status of lamp 1.
[LAMP2]	Displays the runtime and status of lamp 2.
[LAMP3]	Displays the runtime and status of lamp 3.
[LAMP4]	Displays the runtime and status of lamp 4.
[INTAKE AIR TEMP.]*1	Displays the status of the intake air temperature of the projector.
[OPTICS MODULE TEMP.]*1	Displays the status of the internal temperature of the projector.
[EXHAUST AIR TEMP.]*1	Displays the status of the exhaust air temperature of the projector.
[COOLING CONDITION]	Displays the set cooling conditions.
[ATMOSPHERIC PRESSURE]	Displays the atmospheric pressure.
[SELF TEST]	Displays the status of the projector.
[INPUT]	Displays the input terminal currently selected.
[BACKUP INPUT STATUS]	Displays whether switching to the signal of the backup input is possible or not when [BACKUP INPUT MODE] is set to [ON] or [1], [2]. (➡ page 111)
[SIGNAL NAME]	Displays the input signal name.
[SIGNAL FREQUENCY]	Displays the frequency of the input signal.
[NUMBER OF REGISTERED SIGNAL]	Displays the number of registered signals.
[REMOTE2 STATUS]	Displays the control status of the REMOTE2.
[AC VOLTAGE]	Displays the input supply voltage.
[LAMP UNIT MODEL NO.]	Displays the model no. of the lamp unit used in the projector.
[LAMP1 SERIAL NUMBER]	Displays the serial number of lamp 1.
[LAMP2 SERIAL NUMBER]	Displays the serial number of lamp 2.
[LAMP3 SERIAL NUMBER]	Displays the serial number of lamp 3.
[LAMP4 SERIAL NUMBER]	Displays the serial number of lamp 4.
[MAIN/SUB VERSION]	Displays the main and sub versions of the firmware of the projector.

[UPGRADE]*2	[ET-UK20]	Displays the activation status by the Upgrade Kit (Model No.: ET-UK20).
	[ET-CUK10]	Displays the activation status by the Auto Screen Adjustment Upgrade Kit (Model No.: ET-CUK10).
[ON COUNT]	[POWER ON TIMES]	Displays the number of times the power is turned on.
	[LAMP1 ON] - [LAMP4 ON]	Displays the number of times the lamp is turned on.
	[SHUTTER]	Displays the number of times the shutter is closed.
[SIGNAL INFORMATION]	[MEMORY NO.]	Displays the memory number of the input signal.
	[INPUT]	Displays the input terminal currently selected.
	[SIGNAL NAME]	Displays the input signal name.
	[SIGNAL FREQUENCY]	Displays the frequency of the input signal.
	[SYNC.STATE]	Displays the synch polarity of the input signal.
	[V.SYNC WIDTH]	Displays the vertical sync signal pulse width of the input signal.
	[SCAN TYPE]	Displays the scan type of the input signal.
	[TOTAL DOTS]	Displays the total dot count of the input signal.
	[DISPLAY DOTS]	Displays the number of input signal display dots.
	[TOTAL LINES]	Displays the total line count of the input signal.
	[DISPLAY LINES]	Displays the number of input signal display lines.
	[SAMPLING]	Displays the sampling information of the input signal.
	[SIGNAL LEVEL]	Displays the signal level of the input signal.
	[BIT DEPTH]	Displays the gradation of the input signal.

*1 The temperature status is indicated with text color (green/yellow/red) and bar scale. Use the projector within the range that the indication is green.
*2 Only for PT-DZ21K2, PT-DS20K2

Note

- Press the <ENTER> button while displaying the **[STATUS]** screen to send an E-mail including the content of status to the E-mail addresses (up to two addresses) set in “[E-mail set up] page” (➡ page 169).
- Some items in [SIGNAL INFORMATION] may be displayed and others not displayed, depending on the signal being input.
- If any abnormality has occurred on the projector, press the <DEFAULT> button while the **[STATUS]** screen is displayed to display the detail screen of the error information.
- For details on the contents displayed in [SELF TEST], refer to “Self-diagnosis display” (➡ page 190).
- The “runtime” displayed in the [STATUS] may be different from the actual times when a lamp unit that was attached to a different projector model is installed on this projector (PT-DZ21K2, PT-DS20K2, PT-DW17K2, PT-DZ16K2), or when the lamp unit that was attached to this projector is installed on a different projector model.

[AC VOLTAGE MONITOR]

Enable or disable the AC voltage monitor function. The value of input supply voltage is displayed on the self-diagnosis display at the side of the projector when enabled.

1) Press ▲▼ to select [AC VOLTAGE MONITOR].

2) Press ◀▶ to switch the item.

- The items will switch each time you press the button.

[OFF]	Disables the AC voltage monitor function.
[ON]	Enables the AC voltage monitor function.

Note

- When [ON] is set, the value of the input supply voltage is always displayed in the self-diagnosis display while the main power of the projector is turned on.
- Even when [OFF] is set, the value of input supply voltage can be displayed temporarily in the self-diagnosis display by operating the button on the remote control. (➡ page 75)
- The value of input supply voltage cannot be displayed in the self-diagnosis display during standby when the [PROJECTOR SETUP] menu → [STANDBY MODE] (➡ page 133) is set to [ECO].

[NO SIGNAL SHUT-OFF]

A function that automatically switches the power source of the projector to standby if there is no input signal for a certain period of time. The time before switching to standby can be set.

1) Press ▲▼ to select [NO SIGNAL SHUT-OFF].

2) Press ◀▶ to switch the item.

- The items will switch each time you press the button.

[DISABLE]	Disables the No signal shut-off function.
[10MIN.] - [90MIN.]	Sets the time in increments of 10 minutes.

[REMOTE2 MODE]

You can set the <REMOTE 2 IN> terminal.

1) Press ▲▼ to select [REMOTE2 MODE].

2) Press ◀▶ to switch the item.

- The items will switch each time you press the button.

[DEFAULT]	Uses pin assignment of the <REMOTE 2 IN> terminal in standard setting. (➡ page 206)
[USER]	Changes the setting of the <REMOTE 2 IN> terminal.

- When [USER] is selected, proceed to Step **3)**.

3) Press the <ENTER> button.

4) Press ▲▼ to select one from [PIN2] to [PIN8], and press ◀▶ to switch the setting.

[FUNCTION BUTTON]

Set the function of the <FUNCTION> button on the remote control.

1) Press ▲▼ to select [FUNCTION BUTTON].

2) Press the <ENTER> button.

- The **[FUNCTION BUTTON]** screen is displayed.

3) Press ▲▼ to select a function.

[DISABLE]	Disables the <FUNCTION> button.
[P IN P]	Switches the [P IN P] setting ([OFF], [USER1], [USER2], or [USER3]). (➡ page 144)
[SUB MEMORY]	Displays the sub memory list. (➡ page 149)
[SYSTEM SELECTOR]	Switches the [SYSTEM SELECTOR] setting. (➡ page 89)
[SYSTEM DAYLIGHT VIEW]	Switches the [SYSTEM DAYLIGHT VIEW] setting. (➡ page 87)
[FREEZE]	Temporarily pauses the image. (➡ page 123)
[WAVEFORM MONITOR]	Displays the waveform of the input signal. (➡ page 123)
[LENS MEMORY LOAD]	Loads the registered lens memory. (➡ page 141)
[LEFT/RIGHT SWAP][*1]	Switches the [LEFT/RIGHT SWAP] setting. (➡ page 104)
[PROJECTION METHOD]	Switches the [PROJECTION METHOD] setting. (➡ page 126)

*1 Only for PT-DZ21K2, PT-DS20K2

4) Press the <ENTER> button.

[DATE AND TIME]

Set the time zone, date, and time of the built-in clock of the projector.

Setting the time zone

1) Press ▲▼ to select [DATE AND TIME].

2) Press the <ENTER> button.

- The **[DATE AND TIME]** screen is displayed.

3) Press ▲▼ to select [TIME ZONE].

4) Press ◀▶ to switch [TIME ZONE].

Setting the date and time manually

1) **Press ▲▼ to select [DATE AND TIME].**

2) **Press the <ENTER> button.**
   - The **[DATE AND TIME]** screen is displayed.

3) **Press ▲▼ to select [ADJUST CLOCK].**

4) **Press the <ENTER> button.**
   - The **[ADJUST CLOCK]** screen is displayed.

5) **Press ▲▼ to select an item, and press ◀▶ to set the local date and time.**

6) **Press ▲▼ to select [APPLY], and press the <ENTER> button.**
   - The setting of the date and time will be completed.

Setting the date and time automatically

1) **Press ▲▼ to select [DATE AND TIME].**

2) **Press the <ENTER> button.**
   - The **[DATE AND TIME]** screen is displayed.

3) **Press ▲▼ to select [ADJUST CLOCK].**

4) **Press the <ENTER> button.**
   - The **[ADJUST CLOCK]** screen is displayed.

5) **Press ▲▼ to select [NTP SYNCHRONIZATION], and press ◀▶ to change the setting to [ON].**

6) **Press ▲▼ to select [APPLY], and press the <ENTER> button.**
   - The setting of the date and time will be completed.

Note

- To set the date and time automatically, the projector must be connected to the network.
- If synchronization with the NTP server fails just after [NTP SYNCHRONIZATION] is set to [ON], [NTP SYNCHRONIZATION] will return to [OFF]. If [NTP SYNCHRONIZATION] is set to [ON] while the NTP server is not set, [NTP SYNCHRONIZATION] will return to [OFF].
- Access the projector via a web browser to set the NTP server. Refer to "[Adjust clock] page" (➡ page 168) for details.
- The [TIME ZONE] setting is reset to the factory default when [ALL USER DATA] is executed from the [PROJECTOR SETUP] menu → [INITIALIZE] (➡ page 143). However, the date and time based on the local date and time setting (Coordinated Universal Time, UTC, Universal Time, Coordinated) will be maintained without being initialized.

[LENS CALIBRATION]

Detect the lens shift limit value of the projector and set the home position and the ET-D75LE90 lens standard position automatically.

1) **Press ▲▼ to select [LENS CALIBRATION].**

2) **Press ◀▶ to switch the item.**
   - The items will switch each time you press the button.

[NORMAL]	Select this item when anything other than the fixed-focus lens (Model No.: ET-D75LE90) is used. Move the lens to the home position after completing the calibration.
[D75LE90]	Select this item when the fixed-focus lens (Model No.: ET-D75LE90) is used. Move the lens to the ET-D75LE90 lens standard position after completing the calibration.

3) **Press the <ENTER> button.**
   - The confirmation screen is displayed.

4) **Press ◀▶ to select [OK], and press the <ENTER> button.**
   - To cancel, select [CANCEL].
   - The lens moves up, down, left, and right to detect the lens shift limit value, and automatically set the home position and the ET-D75LE90 lens standard position.
   - The lens stops to complete the calibration.

Note

- [PROGRESS] is displayed in the menu during lens calibration. The operation cannot be canceled during calibration.
- When lens calibration executes correctly, [COMPLETE] is displayed and [INCOMPLETE] is displayed when it does not execute correctly.
- Pressing the <FOCUS> button on the remote control for at least three seconds will also display the confirmation screen for lens calibration execution.

[LENS MEMORY]

Save and load the focus position, shift position, and zoom position of an adjusted lens.

Saving lens position

1) **Press ▲▼ to select [LENS MEMORY].**
2) **Press the <ENTER> button.**
3) **Press ▲▼ to select [LENS MEMORY SAVE].**
4) **Press the <ENTER> button.**
   - The **[LENS MEMORY SAVE]** screen is displayed.
5) **Press ▲▼ to select the item to save, and press the <ENTER> button.**
6) **When the confirmation screen is displayed, press ◀▶ to select [OK], and press the <ENTER> button.**
   - The **[LENS MEMORY NAME INPUT]** screen is displayed.
7) **Press ▲▼◀▶ to select the text, and press the <ENTER> button to enter the text.**
8) **After the name is input, press ▲▼◀▶ to select [OK], and press the <ENTER> button.**
   - The registration completes and returns to the **[LENS MEMORY SAVE]** screen.
   - If you press ▲▼◀▶ to select [CANCEL] and then press the <ENTER> button, the lens memory will not be saved.
   - If you press ▲▼◀▶ to select [DEFAULT] and press the <ENTER> button, the entered name will not be registered and the default name will be used.
   - If you select [OK] without entering any characters and press the <ENTER> button, the default name will be used.

Loading the lens position

1) **Press ▲▼ to select [LENS MEMORY].**
2) **Press the <ENTER> button.**
3) **Press ▲▼ to select [LENS MEMORY LOAD].**
4) **Press the <ENTER> button.**
   - The **[LENS MEMORY LOAD]** screen is displayed.
5) **Press ▲▼ to select the item to load, and press the <ENTER> button.**
6) **When the confirmation screen is displayed, press ◀▶ to select [OK], and press the <ENTER> button.**
   - The lens moves automatically to the registered shift, zoom, and focus positions.

Note

- Lens memory is not guaranteed to be 100 % reproduced.
- The zoom and focus positions may have shifted after lens memory was loaded. Readjust as necessary.
  Beware of shift, as errors in zoom position are particularly significant.
- When a lens is replaced, readjust and save the lens memory again.
- If a lens without zoom function is used, the lens memory of the zoom position does not operate.
- When [LENS MEMORY LOAD] is assigned to the <FUNCTION> button, the registered lens memory is loaded in order each time you press the <FUNCTION> button.

Deleting a lens memory

1) **Press ▲▼ to select [LENS MEMORY].**

2) **Press the <ENTER> button.**

3) **Press ▲▼ to select [LENS MEMORY EDIT].**

4) **Press the <ENTER> button.**
   - The **[LENS MEMORY EDIT]** screen is displayed.

5) **Press ▲▼ to select [LENS MEMORY DELETE].**

6) **Press the <ENTER> button.**
   - The **[LENS MEMORY DELETE]** screen is displayed.

7) **Press ▲▼ to select the item to delete, and press the <ENTER> button.**

8) **When the confirmation screen is displayed, press ◀▶ to select [OK], and press the <ENTER> button.**

Changing the lens memory name

1) **Press ▲▼ to select [LENS MEMORY].**

2) **Press the <ENTER> button.**

3) **Press ▲▼ to select [LENS MEMORY EDIT].**

4) **Press the <ENTER> button.**
   - The **[LENS MEMORY EDIT]** screen is displayed.

5) **Press ▲▼ to select [LENS MEMORY NAME CHANGE].**

6) **Press the <ENTER> button.**
   - The **[LENS MEMORY NAME CHANGE]** screen is displayed.

7) **Press ▲▼ to select the name to change, and press the <ENTER> button.**
   - The **[LENS MEMORY NAME INPUT]** screen is displayed.

8) **Press ▲▼◀▶ to select the text, and press the <ENTER> button to enter the text.**

9) **After the name is changed, press ▲▼◀▶ to select [OK], and press the <ENTER> button.**
   - The registration completes and returns to the **[LENS MEMORY NAME CHANGE]** screen.
   - If you press ▲▼◀▶ to select [CANCEL] and then press the <ENTER> button, the changed name will not be registered.
   - If you press ▲▼◀▶ to select [DEFAULT] and press the <ENTER> button, the changed name will not be registered and the default name will be used.
   - If you select [OK] without entering any characters and press the <ENTER> button, the default name will be used.

[SAVE ALL USER DATA]

Save the various setting values as a backup in the built-in memory of the projector.

1) **Press ▲▼ to select [SAVE ALL USER DATA].**

2) **Press the <ENTER> button.**
   - The **[SECURITY PASSWORD]** screen is displayed.

3) **Enter a security password and press the <ENTER> button.**

4) **When the confirmation screen is displayed, press ◀▶ to select [OK], and press the <ENTER> button.**
   - [PROGRESS] is displayed while saving data.

Note

- Data set from the computer application is not included in [ALL USER DATA].

[LOAD ALL USER DATA]

Load the various setting values saved as a backup in the built-in memory of the projector.

1) Press ▲▼ to select [LOAD ALL USER DATA].

2) Press the <ENTER> button.
- The **[SECURITY PASSWORD]** screen is displayed.

3) Enter a security password and press the <ENTER> button.

4) When the confirmation screen is displayed, press ◀▶ to select [OK], and press the <ENTER> button.

Note

- The projector enters the standby mode to reflect the setting values when [LOAD ALL USER DATA] is executed.
- Data registered from a computer is not included in [ALL USER DATA].

[INITIALIZE]

Return various setting values to their factory default settings.

1) Press ▲▼ to select [INITIALIZE].

2) Press the <ENTER> button.
- The **[SECURITY PASSWORD]** screen is displayed.

3) Enter a security password and press the <ENTER> button.
- The **[INITIALIZE]** screen is displayed.

4) Press ▲▼ to select an item to initialize.

[ALL USER DATA]	Returns all setting values including [REGISTERED SIGNAL], [NETWORK SETUP], [E-mail set up], and [USER LOGO] to the factory default settings. The projector enters the standby mode to reflect the setting values.
[REGISTERED SIGNAL]	Deletes all the setting values saved for each input signal. To delete only a part of a registered signal, perform the procedure described in “Deleting the registered signal” (➡ page 147).
[NETWORK/E-MAIL]	Returns [NETWORK SETUP] and [E-mail set up] to factory default settings.
[LOGO IMAGE]	Deletes the image registered in [USER LOGO].

5) Press the <ENTER> button.

6) When the confirmation screen is displayed, press ◀▶ to select [OK], and press the <ENTER> button.

Note

- Even when [ALL USER DATA] is executed, the [UNIFORMITY] and [STANDBY MODE] settings are not initialized.

[SERVICE PASSWORD]

This function is used by a service person.

[P IN P] menu

On the menu screen, select [P IN P] from the main menu, and select an item from the sub-menu.
Refer to "Navigating through the menu" (➡ page 77) for the operation of the menu screen.

Using P IN P function

Locate a separate, small sub screen in the main screen to project two images simultaneously.

1) Press ▲▼ to select [P IN P MODE].

2) Press the <ENTER> button.
- The **[P IN P MODE]** screen is displayed.

3) Press ▲▼ to select a function.

[OFF]	P IN P function is not used.
[USER1]	The items set in "Setting P IN P function" (➡ page 144) are used in P IN P function.
[USER2]	
[USER3]	

4) Press the <ENTER> button.

Setting P IN P function

P IN P function settings can be saved to [USER1], [USER2], and [USER3].

1) Press ▲▼ to select [P IN P MODE].

2) Press the <ENTER> button.
- The **[P IN P MODE]** screen is displayed.

3) Press ▲▼ to select the desired mode from [USER1], [USER2], and [USER3], and press the <ENTER> button.

4) Press ▲▼ to select [MAIN WINDOW] or [SUB WINDOW], and press the <ENTER> button.

5) Press ▲▼ to select the input terminal to be displayed in the window, and press the <ENTER> button.

6) Press ▲▼to select an item.

[SIZE]	Set the window display size between 10 % and 100 %.
[POSITION]	Set the display position of the window within the screen.
[CLOCK PHASE]	When the sub window is input from the <RGB 1 IN> terminal or the <RGB 2 IN> terminal and a flickering image or smeared outline appears, set between 0 and +31.

7) If [SIZE] is selected in Step 6), press the <ENTER> button.
- The sub-menu is displayed.

8) Press ▲▼to select an item.

9) Press ◀▶ to make adjustment, and press the <MENU> button.

10) If [POSITION] is selected in Step 6), press the <ENTER> button.

11) Press ▲▼◀▶ to adjust the position, and press the <MENU> button.

12) If [CLOCK PHASE] is selected in Step 6), press ◀▶ to make adjustment.

13) Press ▲▼ to select [FRAME LOCK].

14) Press ◀▶ to switch the item.

[MAIN WINDOW]	Set frame lock to the input signal set in the main window.
[SUB WINDOW]	Set frame lock to the input signal set in the sub window.

15) Press ▲▼ to select [TYPE].

16) Press ◀▶ to switch the item.

[MAIN WINDOW]	The main window has display priority.
[SUB WINDOW]	The sub window has display priority.

Note

- The P IN P function may not be available for some signals being input or terminals being selected. Refer to “Two-window display combination list” (➡ page 207) for details.
- Images in the combination of DIGITAL LINK and other inputs cannot be displayed in P IN P.
- The main window setting values are applied to image adjustment values such as [PICTURE MODE], [GAMMA], and [COLOR TEMPERATURE].
- While in the normal screen (where no menu is displayed), press ◀▶ to switch the sizes and positions of the main window and sub window while P IN P is operating.
- [P IN P] cannot be set when [FRAME RESPONSE] is set to other than [NORMAL].
- [P IN P] cannot be set when [BACKUP INPUT MODE] is set to [ON] or [1], [2].
- [P IN P] cannot be set when [IMAGE ROTATION] is set to other than [OFF].
- 3D images cannot be displayed while in P IN P. (Only for PT-DZ21K2, PT-DS20K2)
- [P IN P] cannot be set when [SIMUL INPUT SETTING] is set to other than [OFF].

[TEST PATTERN] menu

On the menu screen, select [TEST PATTERN] from the main menu.
Refer to "Navigating through the menu" (➡ page 77) for the operation of the menu screen.

[TEST PATTERN]

Display the test pattern built-in to the projector.
Settings of position, size, and other factors will not be reflected in test patterns. Make sure to display the input signal before performing various adjustments.

1) Press ◀▶ to switch the [TEST PATTERN] item.
- The items will switch each time you press the button.

Menu screen + All white	Displays test patterns with the menu screen. Select a test pattern so that it is easy to make various adjustments.
Menu screen + All black	
Menu screen + Window	
Menu screen + Window (inversion)	
Menu screen + Color bar (vertical)	
Menu screen + Color bar (horizontal)	
Menu screen + 16:9/4:3 aspect frame	
Menu screen + Focus	
Menu screen + Input screen	Displays the menu screen and input signal. Built-in test patterns are not displayed.

Note

- Press the <ON SCREEN> button on the remote control while the test pattern is displayed to hide the menu screen.

Changing color or a focus test pattern

The color can be changed when the "Menu screen + Focus" test pattern is displayed.

1) Press ◀▶ to select the "Menu screen + Focus" test pattern.

2) Press the <ENTER> button.
- The **[TEST PATTERN COLOR]** screen is displayed.

3) Press ▲▼ to select a color, and press the <ENTER> button.
- The color of the focus test pattern will be changed to the selected color.

Note

- The test pattern color settings return to [WHITE] when the projector is switched off.
- Colors of the test patterns other than focus test patterns cannot be changed.

[SIGNAL LIST] menu

On the menu screen, select [SIGNAL LIST] from the main menu.
Refer to "Navigating through the menu" (➡ page 77) for the operation of the menu screen.

■ Registered signal details

Memory number: A1 (1-2)

Sub memory number

When the address number (A1, A2, ... L7, L8) signal is registered

- A name can be set for each sub memory (➡ page 149).

Registering new signals

After a new signal is input and the <MENU> button on the remote control or the control panel is pressed, the registration is completed and the **[MAIN MENU]** screen is displayed.
- A 3D icon is displayed at the right of the **[SIGNAL LIST]** screen when a signal is registered as 3D signal.

Note

- Up to 96 signals, including sub memories, can be registered to the projector.
- There are 12 pages (eight memories of A through L, with eight memories possible on each page) for memory numbers, and the signal is registered to the lowest number that is available. If there is no available memory number it will be overwritten from the oldest signal.
- The name to be registered is automatically determined by the input signal.
- If a menu is being displayed, the new signals will be registered at the instant they are input.

Renaming the registered signal

Registered signals can be renamed.

1) **Press ▲▼◀▶ to select the signal of which name is to be changed.**

2) **Press the <ENTER> button.**
   - The **[REGISTERED SIGNAL STATUS]** screen is displayed.
   - The memory number, input terminal, input signal name, frequency, synch polarity, etc., are displayed.
   - Press the <MENU> button to return to the **[SIGNAL LIST]** screen.

3) **Press the <ENTER> button.**
   - The **[REGISTERED SIGNAL SETUP]** screen is displayed.

4) **Press ▲▼ to select [SIGNAL NAME CHANGE].**

5) **Press the <ENTER> button.**
   - The **[SIGNAL NAME CHANGE]** screen is displayed.

6) **Press ▲▼◀▶ to select the text, and press the <ENTER> button to enter the text.**

7) **After the name is changed, press ▲▼◀▶ to select [OK], and press the <ENTER> button.**
   - The registration is completed and the **[REGISTERED SIGNAL SETUP]** screen returns.
   - When pressing ▲▼◀▶ to select [CANCEL] and pressing the <ENTER> button, the changed signal name will not be registered and an automatically registered signal name will be used.

Deleting the registered signal

Registered signals can be deleted.

1) **Press ▲▼◀▶ to select the signal to delete.**

2) **Press the <DEFAULT> button on the remote control.**
   - The **[REGISTERED SIGNAL DELETE]** screen is displayed.
   - To cancel the deletion, press the <MENU> button to return to the **[REGISTERED SIGNAL LIST]** screen.

3) Press the <ENTER> button.

- The selected signal will be deleted.

Note

- A registered signal can also be deleted from [REGISTERED SIGNAL DELETE] on the **[REGISTERED SIGNAL SETUP]** screen.

Protecting the registered signal

1) Press ▲▼◀▶ to select the signal to protect.

2) Press the <ENTER> button.

- The **[REGISTERED SIGNAL STATUS]** screen is displayed.

3) Press the <ENTER> button.

- The **[REGISTERED SIGNAL SETUP]** screen is displayed.

4) Press ▲▼ to select [LOCK].

5) Press ◀▶ to switch the item.

- The items will switch each time you press the button.

[OFF]	The signal is not protected.
[ON]	The signal is protected.

- A lock icon is displayed at the right of the **[SIGNAL LIST]** screen when [LOCK] is set to [ON].

Note

- When [LOCK] is set to [ON], signal deletion, image adjustment, and automatic setup are not available. To perform these operations, set [LOCK] to [OFF].
- A signal can be registered to the sub memory even if it is protected.
- Even a protected signal will be deleted if [INITIALIZE] is executed.

Expanding signal lock-in range

1) Press ▲▼◀▶ to select the signal to set.

2) Press the <ENTER> button.

- The **[REGISTERED SIGNAL STATUS]** screen is displayed.

3) Press the <ENTER> button.

- The **[REGISTERED SIGNAL SETUP]** screen is displayed.

4) Press ▲▼ to select [LOCK-IN RANGE].

5) Press ◀▶ to switch the item.

- The items will switch each time you press the button.

[NARROW]	Select in most cases.
[WIDE]	Widens the lock-in range.

- An expansion icon is displayed at the right of the **[SIGNAL LIST]** screen when [LOCK-IN RANGE] is set to [WIDE].

Note

- Switch the range where the signal to be input is determined to be the same signal as the already registered signal.
- To prioritize the determination that a signal is the same as the already registered signal, set this function to [WIDE].
- Use in cases such as when the synchronizing frequency of a signal to be input has changed slightly, or multiple signal lists are registered.
- This function can be used only when a signal is input from the <RGB 1 IN> terminal, the <RGB 2 IN> terminal, <DVI-D IN> terminal, the <HDMI IN> terminal, or the <DIGITAL LINK/LAN> terminal.
- When [WIDE] is set, the image may be distorted because a signal is recognized as the same even if its synchronizing frequency varies slightly.

- When a signal to be input corresponds to multiple signals set in [WIDE], a registered signal with a high memory number receives priority. Example: a signal to be input that corresponds to memory numbers A2, A4 and B1 will be determined to be B1.
- When a registration signal is deleted, the settings are also deleted.
- In an environment where multiple types of signals are input to the same terminal, signals are sometimes not determined correctly when the setting is set to [WIDE].

Sub memory

The projector has a sub memory function that can register the multiple image adjustment data, even if it is recognized as the same signal by the frequency or format of the synchronization signal source.
Use this function when you need to adjust the picture quality such as switching of the aspect ratio or white balance by the same signal source. The sub memory includes all the data that can be adjusted for each signal, such as the image aspect ratio and data adjusted in the [PICTURE] item ([CONTRAST], [BRIGHTNESS], etc.).

Registering to the sub memory

1) **While in the normal screen (where no menu is displayed), press ◀▶.**
   - The sub memory registration screen is displayed if the sub memory is not registered. Proceed to Step **3)**.
   - A list of sub memories registered to the signal currently input is displayed.
   - The <FUNCTION> button on the remote control can be used instead of ◀▶ when [SUB MEMORY] is selected from the [PROJECTOR SETUP] menu → [FUNCTION BUTTON].
2) **Press ▲▼◀▶ to select the sub memory number to register in [SUB MEMORY LIST].**
3) **Press the <ENTER> button.**
   - The **[SIGNAL NAME CHANGE]** screen is displayed.
4) **Press ▲▼◀▶ to select [OK], and press the <ENTER> button.**
   - To rename the registered signal, follow the procedure in Steps **6)** and **7)** in “Renaming the registered signal” (➡ page 147).

Switching to the sub memory

1) **While in the normal screen (where no menu is displayed), press ◀▶.**
   - A list of sub memories registered to the signal currently input is displayed.
2) **Press ▲▼◀▶ to select the signal to switch in [SUB MEMORY LIST].**
3) **Press the <ENTER> button.**
   - This switches to the signal selected in Step **2)**.

Deleting the sub memory

1) **While in the normal screen (where no menu is displayed), press ◀▶.**
   - The **[SUB MEMORY LIST]** screen is displayed.
2) **Press ▲▼◀▶ to select the sub memory to be deleted, and press the <DEFAULT> button on the remote control.**
   - The **[REGISTERED SIGNAL DELETE]** screen is displayed.
   - To cancel the deletion, press the <MENU> button to return to the **[SUB MEMORY LIST]** screen.
3) **Press the <ENTER> button.**
   - The selected sub memory will be deleted.

[SECURITY] menu

On the menu screen, select [SECURITY] from the main menu, and select an item from the sub-menu. Refer to "Navigating through the menu" (➡ page 77) for the operation of the menu screen.

- When the projector is used for the first time
  Initial password: Press ▲▶▼◀▲▶▼◀ in order, and press the <ENTER> button.

Attention

- When you select the [SECURITY] menu and press the <ENTER> button, entering a password is required. Enter the preset password and then continue operations of the [SECURITY] menu.
- When the password has been changed previously, enter the changed password, and press the <ENTER> button.

Note

- The entered password is displayed with * marks on the screen.
- An error message is displayed on the screen when the entered password is incorrect. Re-enter the correct password.

[SECURITY PASSWORD]

Display the **[SECURITY PASSWORD]** screen when the power is turned on with the <MAIN POWER> switch set to the <OFF> side. When the entered password is incorrect, the operation will be restricted to the power standby <⏻> button, the <SHUTTER> button, and the <LENS> buttons (<FOCUS>, <ZOOM>, <SHIFT>).

1) Press ▲▼ to select [SECURITY PASSWORD].

2) Press ◀▶ to switch the item.

- The items will switch each time you press the button.

[OFF]	Disables the security password entry.
[ON]	Enables the security password entry.

Note

- The [SECURITY PASSWORD] setting is set to [OFF] by the factory default or when [ALL USER DATA] in [INITIALIZE] (➡ page 143) is executed.
- Change the password periodically that is hard to guess.
- The security password is enabled after setting [SECURITY PASSWORD] to [ON] and turning the <MAIN POWER> switch to <OFF>.

[SECURITY PASSWORD CHANGE]

Change the security password.

1) Press ▲▼ to select [SECURITY PASSWORD CHANGE].

2) Press the <ENTER> button.

- The **[SECURITY PASSWORD CHANGE]** screen is displayed.

3) Press ▲▼◀▶ and the number (<0> - <9>) buttons to set the password.

- Up to eight button operations can be set.

4) Press the <ENTER> button.

5) Re-enter the password for the confirmation.

6) Press the <ENTER> button.

Note

- The entered password is displayed with * marks on the screen.
- When numerical values are used for the security password, the security password is required to be initialized if the remote control is lost. Consult your dealer for the method of initialization.

[DISPLAY SETTING]

Overlap the security message (text or image) over the projecting image.

1) Press ▲▼ to select [DISPLAY SETTING].

2) Press ◀▶ to switch the item.

- The items will switch each time you press the button.

[OFF]	Hides the security message.
[TEXT]	Displays the text set in the [SECURITY] menu → [TEXT CHANGE].
[USER LOGO]	Displays the image registered by the user.

Note

- To create/register the [USER LOGO] image, use “Logo Transfer Software” included in the supplied CD-ROM.

[TEXT CHANGE]

Edit the text to be displayed when [TEXT] is selected in [DISPLAY SETTING].

1) Press ▲▼ to select [TEXT CHANGE].

2) Press the <ENTER> button.

- The **[TEXT CHANGE]** screen is displayed.

3) Press ▲▼◀▶ to select the text, and press the <ENTER> button to enter the text.

4) Press ▲▼◀▶ to select [OK], and press the <ENTER> button.

- The text is changed.

[CONTROL DEVICE SETUP]

Enable/disable the button operations on the control panel and the remote control.

1) Press ▲▼ to select [CONTROL DEVICE SETUP].

2) Press the <ENTER> button.

- The **[CONTROL DEVICE SETUP]** screen is displayed.

3) Press ▲▼ to select [CONTROL PANEL] or [REMOTE CONTROL].

[CONTROL PANEL]	You can set the limitation on the control from the control panel.
[REMOTE CONTROL]	You can set the limitation on the control from the remote control.

4) Press the <ENTER> button.

- The **[CONTROL PANEL]** screen or the **[REMOTE CONTROL]** screen is displayed.

5) Press ▲▼ to select [CONTROL PANEL] or [REMOTE CONTROL].

6) Press ◀▶ to switch the item.

- You can set the operation restriction from the control panel or the remote control.

[ENABLE]	Enables all button operations.
[DISABLE]	Disables all button operations.
[USER]	Operation of all buttons can be enabled/disabled separately. Refer to “Enabling/disabling any button” (➡ page 151) for details.

7) Press ▲▼ to select [APPLY], and press the <ENTER> button.

- The confirmation screen is displayed.

8) Press ◀▶ to select [OK], and press the <ENTER> button.

Enabling/disabling any button

1) Press ▲▼ to select [CONTROL DEVICE SETUP].

2) Press the <ENTER> button.

- The **[CONTROL DEVICE SETUP]** screen is displayed.

3) Press ▲▼ to select [CONTROL PANEL] or [REMOTE CONTROL].

4) Press the <ENTER> button.

- The **[CONTROL PANEL]** screen or the **[REMOTE CONTROL]** screen is displayed.

5) Press ▲▼ to select [CONTROL PANEL] or [REMOTE CONTROL].

6) Press ◀▶ to switch [USER].

7) Press ▲▼ to select the button item to set.

- When [INPUT SELECT BUTTON] is selected, press the <ENTER> button, and then press ▲▼ to select the button to set.

	Buttons that can be set	
	[CONTROL PANEL]	[REMOTE CONTROL]
[POWER BUTTON]	Power standby <⏻> button, power on <|> button	
[INPUT SELECT BUTTON]	<RGB1> button, <RGB2> button, <DVI-D> button, <HDMI> button, <DIGITAL LINK> button, <SDI 1/2> button*1	<RGB1> button, <RGB2> button, <VIDEO> button, <S-VIDEO Y/C> button, <DVI-D> button, <HDMI> button, <DIGITAL LINK> button, <SDI> button*1, <INPUT MENU> button
[MENU BUTTON]	<MENU> button	
[LENS BUTTON]	<LENS> button	Lens buttons (<FOCUS>, <ZOOM>, <SHIFT>)
[AUTO SETUP BUTTON]	<AUTO SETUP> button	
[SHUTTER BUTTON]	<SHUTTER> button	
[ASPECT BUTTON]	—	<ASPECT> button
[ON SCREEN BUTTON]	—	<ON SCREEN> button
[OTHER BUTTON]	▲▼◀▶, <ENTER> button	Buttons not listed above

*1 SDI input is supported only for PT-DZ21K2, PT-DS20K2, PT-DZ16K2.

8) Press ◀▶ to switch the item.

[ENABLE]	Enables button operations.
[DISABLE]	Disables button operations.

- Following item can be selected only when [SDI BUTTON] for [INPUT SELECT BUTTON] is selected in PT-DZ21K2, PT-DS20K2.

[TOGGLE]	Switches between [SDI1] and [SDI2] when the button is operated.
[SDI1]	Fixes to [SDI1].
[SDI2]	Fixes to [SDI2].
[DISABLE]	Disables button operations.

- Press the <MENU> button to return to the **[CONTROL PANEL]** screen or the **[REMOTE CONTROL]** screen when [INPUT SELECT BUTTON] is selected in Step **7)**.

9) Press ▲▼ to select [APPLY], and press the <ENTER> button.

- The confirmation screen is displayed.

10) Press ◀▶ to select [OK], and press the <ENTER> button.

Note

- When a button operation is performed on the device set to [DISABLE], the **[CONTROL DEVICE PASSWORD]** screen is displayed. Enter the control device password.
- The **[CONTROL DEVICE PASSWORD]** screen will disappear when there is no operation for approx. 10 seconds.
- If the operations of both [CONTROL PANEL] and [REMOTE CONTROL] are set to [DISABLE], the projector cannot be turned off (cannot enter standby).
- When the setting has completed, the menu screen will disappear. To operate continuously, press the <MENU> button to display the main menu.
- Even when you set button operations on the remote control disabled, operations of the <ID SET> and <ID ALL> buttons on the remote control are kept enabled.

[CONTROL DEVICE PASSWORD CHANGE]

The control device password can be changed.

1) Press ▲▼ to select [CONTROL DEVICE PASSWORD CHANGE].

2) Press the <ENTER> button.

- The **[CONTROL DEVICE PASSWORD CHANGE]** screen is displayed.

3) Press ▲▼◀▶ to select the text, and press the <ENTER> button to enter the text.

4) Press ▲▼◀▶ to select [OK], and press the <ENTER> button.

- To cancel, select [CANCEL].

Attention

- The initial password is “AAAA” by the factory default or when [ALL USER DATA] in [INITIALIZE] (➡ page 143) is executed.
- Change the password periodically that is hard to guess.

[NETWORK] menu

On the menu screen, select [NETWORK] from the main menu, and select an item from the sub-menu. Refer to "Navigating through the menu" (➡ page 77) for the operation of the menu screen.

[DIGITAL LINK MODE]

Switch the communication method of the <DIGITAL LINK/LAN> terminal of the projector.

1) Press ▲▼ to select [DIGITAL LINK MODE].

2) Press ◀▶ to switch the item.

- The items will switch each time you press the button.

[AUTO]	Switches the communication method automatically to DIGITAL LINK, long reach, or Ethernet.
[DIGITAL LINK]	Fixes the communication method to DIGITAL LINK.
[LONG REACH]	Fixes the communication method to long reach.
[ETHERNET]	Fixes the communication method to Ethernet.

Possible communication modes

✓: Communication possible
—: Communication not possible

Setting		Communication possible			
		Video transfer (100 m (328'1"))	Video transfer (150 m (492'2"))	Ethernet	RS-232C
[AUTO]	For DIGITAL LINK	✓	—	✓	✓
	For long reach	—	✓	✓	✓
	For Ethernet	—	—	✓	—
[DIGITAL LINK]		✓	—	✓	✓
[LONG REACH]		—	✓	✓	✓
[ETHERNET]		—	—	✓	—

Note

- The maximum transmission distance when connected with the long-reach communication method is 150 m (492'2"). However, the signal that the projector can receive is only up to 1080/60p (148.5 MHz).
- If the communication method is set to long reach at the twist-pair-cable transmitter, connection will be made with long-reach communication method when [DIGITAL LINK MODE] is set to [AUTO]. To connect the projector to the optional DIGITAL LINK Switcher (Model No.: ET-YFB200G) with the long-reach communication method, set [DIGITAL LINK MODE] to [LONG REACH].
- Connection will not be made correctly if the twist-pair-cable transmitter is not supporting the long-reach communication method even if [DIGITAL LINK MODE] is set to [LONG REACH].

[DIGITAL LINK SETUP]

Set the communication method of DIGITAL LINK or Ethernet.

When the projector is connected directly via Ethernet

1) Press ▲▼ to select [DIGITAL LINK SETUP].

2) Press the <ENTER> button.

- The **[DIGITAL LINK SETUP]** screen is displayed.

3) Press ▲▼ to select [DUPLEX(ETHERNET)].

4) Press ◀▶ to switch the communication method.

- The items will switch each time you press the button.

[AUTONEGOTIATION]	Sets the communication method automatically.
[100BaseTX-Full]	Sets full-duplex communication method.
[100BaseTX-Half]	Sets half-duplex communication method.

5) Press ▲▼ to select [STORE].

6) Press the <ENTER> button.

7) After the confirmation screen is displayed, press ◀▶ to select [OK], and then press the <ENTER> button.

Note

- The projector does not support 10BaseT Full/Half.

When the projector is connected to a twisted-pair-cable transmitter

1) Press ▲▼ to select [DIGITAL LINK SETUP].

2) Press the <ENTER> button.
- The **[DIGITAL LINK SETUP]** screen is displayed.

3) Press ▲▼ to select [DUPLEX(DIGITAL LINK)].

4) Press ◀▶ to switch the communication method.
- The items will switch each time you press the button.

[100BaseTX-Full]	Sets full-duplex communication method.
[100BaseTX-Half]	Sets half-duplex communication method.
[AUTONEGOTIATION]	Sets the communication method automatically.

5) Press ▲▼ to select [STORE].

6) Press the <ENTER> button.

7) After the confirmation screen is displayed, press ◀▶ to select [OK], and then press the <ENTER> button.

[DIGITAL LINK STATUS]

Display the DIGITAL LINK connection environment.

1) Press ▲▼ to select [DIGITAL LINK STATUS].

2) Press the <ENTER> button.
- The **[DIGITAL LINK STATUS]** screen is displayed.

[LINK STATUS]	Either [NO LINK], [DIGITAL LINK], [LONG REACH], or [ETHERNET] is displayed.
[HDCP STATUS]	Either [NO SIGNAL], [OFF], or [ON] is displayed.
[SIGNAL QUALITY]	[SIGNAL QUALITY] is a numerical value of the amount of error, and the display color changes to green, yellow, or red depending on that value. Check the signal quality level while receiving a signal from the twisted-pair-cable transmitter. • [MAX]/[MIN]: Maximum/minimum value of the amount of error • Green (–12 dB or lower) → normal signal quality level. • Yellow (–11 to –8 dB) → caution level that noise may appear on the screen. • Red (–7 dB or higher) → abnormal level with interrupted synchronization and receiving not possible.

[NETWORK SETUP]

Perform the initial setting of the network before using the network function.

1) Press ▲▼ to select [NETWORK SETUP].

2) Press the <ENTER> button.
- The **[NETWORK SETUP]** screen is displayed.

3) Press ▲▼ to select an item, and change the settings according to the operation instructions of the menu.

[PROJECTOR NAME]	Allows to change the projector name. Enter the host name if it is required to use a DHCP server.

[DHCP]	[ON]	If a DHCP server exists in the network where the projector is to be connected, obtains the IP address automatically.
	[OFF]	If a DHCP server does not exist in the network where the projector is to be connected, set [IP ADDRESS], [SUBNET MASK], and [DEFAULT GATEWAY].
[IP ADDRESS]	Enter the IP address when a DHCP server is not used.	
[SUBNET MASK]	Enter the subnet mask when a DHCP server is not used.	
[DEFAULT GATEWAY]	Enter the default gateway address when a DHCP server is not used.	

4) Press ▲▼ to select [STORE], and press the <ENTER> button.

5) When the confirmation screen is displayed, press ◀▶ to select [OK], and press the <ENTER> button.

Note

- When using a DHCP server, confirm that the DHCP server is running.
- Consult your network administrator regarding the IP address, subnet mask, and default gateway.
- When [Art-Net SETUP] is set to [ON(2.X.X.X)] or [ON(10.X.X.X)], [NETWORK SETUP] cannot be selected.

[NETWORK CONTROL]

Set up the control method of the network.

1) Press ▲▼ to select [NETWORK CONTROL].

2) Press the <ENTER> button.

- The **[NETWORK CONTROL]** screen is displayed.

3) Press ▲▼ to select an item, and press ◀▶ to change the setting.

[WEB CONTROL]	Set to [ON] to control with the web browser.
[PJLink CONTROL]	Set to [ON] to control with the PJLink protocol.
[COMMAND CONTROL]	Set to [ON] to control with the <SERIAL IN>/<SERIAL OUT> terminal control command format (➡ page 204). Refer to “Control commands via LAN” (➡ page 198).
[COMMAND PORT]	Set the port number used for command control.
[Crestron Connected(TM)]	Set to [ON] to control with Crestron Connected™ of Crestron Electronics, Inc.
[AMX D.D.]	Set to [ON] to control with the controller of AMX Corporation. Setting this function to [ON] enables detection through “AMX Device Discovery”. For details, visit the website of AMX Corporation. URL http://www.amx.com/
[EXTRON XTP]	Set to [ON] when connecting the “XTP transmitter” of Extron Electronics to the <DIGITAL LINK/LAN> terminal. The [EXTRON XTP] setting must be set to [OFF] when connecting the optional DIGITAL LINK output supported device (Model No.: ET-YFB100G, ET-YFB200G). For details of the “XTP transmitter”, visit the website of Extron Electronics. URL http://www.extron.com/

4) Press ▲▼ to select [STORE], and press the <ENTER> button.

5) When the confirmation screen is displayed, press ◀▶ to select [OK], and press the <ENTER> button.

[NETWORK STATUS]

Display the status of the projector network.

1) Press ▲▼ to select [NETWORK STATUS].

2) Press the <ENTER> button.

- The **[NETWORK STATUS]** screen is displayed.

[DHCP]	Displays the status of use of the DHCP server.
[IP ADDRESS]	Displays the [IP ADDRESS].
[SUBNET MASK]	Displays the [SUBNET MASK].
[DEFAULT GATEWAY]	Displays the [DEFAULT GATEWAY].
[DNS1]	Displays the address of the preferred DNS server.
[DNS2]	Displays the address of the alternate DNS server.
[MAC ADDRESS]	Displays the [MAC ADDRESS].

[DIGITAL LINK MENU]

When the optional DIGITAL LINK output supported device (Model No.: ET-YFB100G, ET-YFB200G) is connected to the <DIGITAL LINK/LAN> terminal, the main menu of DIGITAL LINK output supported device is displayed. Refer to the Operating Instructions of the DIGITAL LINK output supported device for details.

Note

- [DIGITAL LINK MENU] cannot be selected when [EXTRON XTP] is set to [ON].
- The operation guidance for the “RETURN” button is in the menu screen of the Digital Interface Box and DIGITAL LINK Switcher. The projector does not have the “RETURN” button, but the same operation is available with the <MENU> button.

[Art-Net SETUP]

Make settings to use the Art-Net function.

1) Press ▲▼ to select [Art-Net SETUP].

2) Press ◀▶ to select an item.

- The items will switch each time you press the button.

[OFF]	Disables the Art-Net function.
[ON(2.X.X.X)]	Enables the Art-Net function and sets the IP address to 2.X.X.X.
[ON(10.X.X.X)]	Enables the Art-Net function and sets the IP address to 10.X.X.X.
[ON(MANUAL)]	Enables the Art-Net function and uses the IP address set in [NETWORK SETUP].

- When other than [OFF] is selected, proceed to Step **3)**.

3) Press the <ENTER> button.

- The **[Art-Net SETUP]** screen is displayed.

4) Press ▲▼ to select the item, and press◀▶ to switch the setting.

[NET]	Enter [NET] to be used when the projector processes Art-Net.
[SUB NET]	Enter [SUB NET] to be used when the projector processes Art-Net.
[UNIVERSE]	Enter [UNIVERSE] to be used when the projector processes Art-Net.
[START ADDRESS]	Enter [START ADDRESS] to be used when the projector processes Art-Net.

5) Press ▲▼ to select [STORE], and press the <ENTER> button.

6) When the confirmation screen is displayed, press ◀▶ to select [OK], and press the <ENTER> button.

Note

- If [ON(2.X.X.X)] or [ON(10.X.X.X)] is selected, IP address is calculated and set automatically.

[Art-Net CHANNEL SETTING]

Set the assignment of the channel.
For the channel definitions used for controlling the projector with the Art-Net function, refer to “Using Art-Net function” (➡ page 195).

1) Press ▲▼ to select [Art-Net CHANNEL SETTING].

2) Press ◀▶ to switch the item.

[2]	Uses the channel assignment in standard setting.
[USER]	Changes the channel assignment.
[1]	Uses the channel assignment with DZ21K series compatible. DZ21K series: DZ21K series, DS20K series, DW17K series, DZ16K series

- When [2] or [1] is selected, pressing the <ENTER> button displays the function assigned to the channel.
- When [USER] is selected, proceed to Step **3)**.

3) Press the <ENTER> button.

- The **[Art-Net CHANNEL SETTING]** screen is displayed.

4) Press ▲▼ to select the channel to set, and press◀▶ to switch the item.

[LIGHT OUTPUT]	Adjusts the amount of light.
[INPUT SELECT]	Switches the input.
[LENS POSITION]	Moves the lens position.
[LENS H SHIFT]	Adjusts the lens shift in the horizontal direction.
[LENS V SHIFT]	Adjusts the lens shift in the vertical direction.
[LENS FOCUS]	Adjusts the focus.
[LENS ZOOM]	Adjusts the zoom.
[POWER]	Controls the power status.
[SHUTTER]	Controls the shutter.
[GEOMETRY]	Performs geometric adjustment.
[CUSTOM MASKING]*1	Performs geometric adjustment using the computer. To use PC-1, PC-2, and PC-3, the optional Upgrade Kit (Model No.: ET-UK20) is required.
[FREEZE]	Freezes the projected image.
[COLOR]	Adjusts the color saturation.
[TINT]	Adjusts the tint.
[RASTER PATTERN]	Displays the raster pattern.
[ENABLE/DISABLE]	Enables/disables the control of the projector with the Art-Net function.
[NONE]	No definition

*1 Only for PT-DZ21K2, PT-DS20K2

- The setting can be also made by pressing ▲▼ to select the channel, pressing the <ENTER> button to display the item list, pressing ▲▼◀▶ to select the item, and pressing the <ENTER> button.
- Same item cannot be set for multiple channels, except for [NONE].

[Art-Net STATUS]

Display the content of control assigned to each channel and the received data of that channel.

1) Press ▲▼ to select [Art-Net STATUS].

2) Press the <ENTER> button.

- The **[Art-Net STATUS]** screen is displayed.

Network connection

The projector has a network function, and the following operations are available from the computer using the web control.

- Setting and adjustment of the projector
- Display of the projector status
- Sending E-mail messages when there is a problem with the projector

The projector supports “Crestron Connected™”, and the following application software of Crestron Electronics, Inc. can be used.

- RoomView Express
- Fusion RV
- RoomView Server Edition

Attention

- When a LAN cable is directly connected to the projector, the network connection must be made indoors.

Note

- “Crestron Connected™” is a system of Crestron Electronics, Inc. that collectively manages and controls devices on multiple systems connected to a network using a computer.
- For details of the “Crestron Connected™”, visit the website of Crestron Electronics, Inc. (English only.)
  URL http://www.crestron.com
  Download “RoomView Express” from the Crestron Electronics, Inc. website. (English only.)
  URL http://www.crestron.com/getroomview
- A LAN cable is required to use the network function.

■ Example of a normal network connection

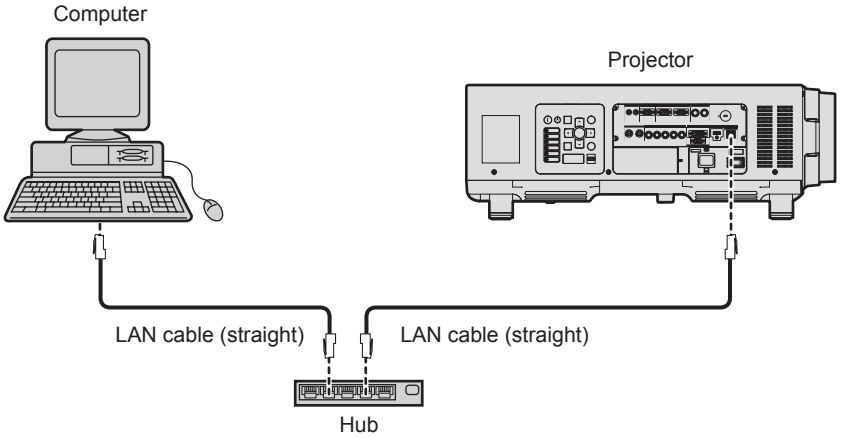

- A web browser is required to use this function. Confirm that the web browser can be used beforehand.
  Supported browser: Internet Explorer 8.0/9.0/10.0/11.0 (Windows OS), Safari 6.0/7.0/8.0 (Mac OS)
- Communication with an E-mail server is required to use the E-mail function. Confirm that the E-mail can be used beforehand.
- Use a LAN cable that is straight cable and compatible with category 5 or higher.
- Use a LAN cable of 100 m (328'1") or shorter.

Connecting to a twisted-pair-cable transmitter

The projector has a function that can receive Ethernet signals from a twisted-pair-cable transmitter together with video and audio signals via a LAN cable. Connect a LAN cable to the <DIGITAL LINK/LAN> terminal of the projector. (➡ pages 21, 29)

■ Example of network connections via a twisted-pair-cable transmitter

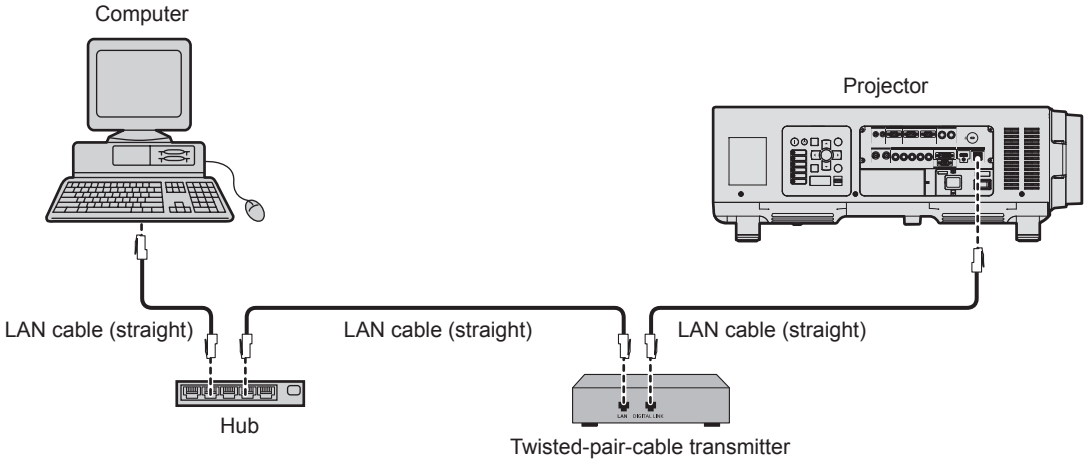

- For the LAN cable between the twisted-pair-cable transmitter and the projector, use a cable that meets the following criteria:
  - Conforming to CAT5e or higher standards
  - Shielded type (including connectors)
  - Straight-through
  - Single wire
- The maximum transmission distance between the twisted-pair-cable transmitter and the projector is 100 m (328'1"). It is possible to transmit up to 150 m (492'2") if the twisted-pair-cable transmitter supports the long-reach communication method. If this distance is exceeded, image may be disrupted or a malfunction may occur in LAN communication.
- When laying cables between the twisted-pair-cable transmitter and the projector, confirm that cable characteristics are compatible with CAT5e or higher using tools such as a cable tester or cable analyzer.
  When a relay connector is used, include it in the measurement.
- Do not use a hub between the twisted-pair-cable transmitter and the projector.
- Do not pull cables forcefully. Also, do not bend or fold cables unnecessarily.
- To reduce the effects of noise as much as possible, stretch out the cables between the twisted-pair-cable transmitter and the projector without any loops.
- Lay the cables between the twisted-pair-cable transmitter and the projector away from other cables, particularly power cables.
- When laying multiple cables, run them side by side along the shortest distance possible without bundling them together.
- After laying the cables, go to the [NETWORK] menu → [DIGITAL LINK STATUS] and confirm that the value of [SIGNAL QUALITY] is displayed in green which indicates normal quality. (➡ page 155)
- For twisted-pair-cable transmitters of other manufacturers of which the operation has been verified with the projector, visit the Panasonic website (http://panasonic.net/avc/projector/). Note that the verification for devices of other manufacturers has been made for the items set by Panasonic Corporation, and not all the operations have been verified. For operation or performance problems caused by the devices of other manufacturers, contact the respective manufacturers.

Accessing from the web browser

1) Start up the web browser on the computer.

2) Enter the IP address set on the projector into the URL entry field of the web browser.

3) Enter the user name and the password.

- The factory default setting of the user name is user1 (user rights)/admin1 (administrator rights) and the password is panasonic (lower case).

4) Click OK.

- The [Projector status] page is displayed.

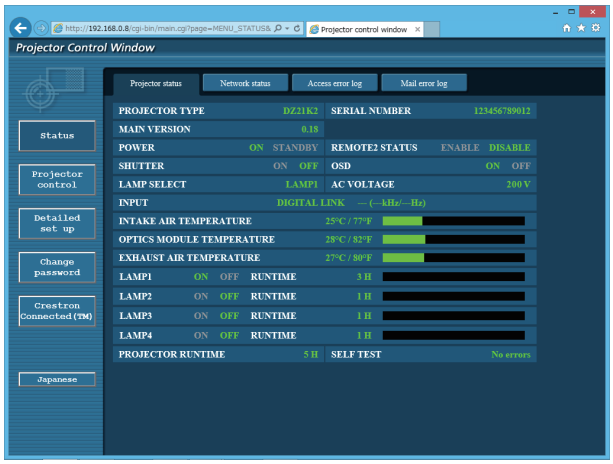

Note

- If you use a web browser to control the projector, set [WEB CONTROL] to [ON] in [NETWORK CONTROL] (➡ page 156).
- Do not perform setting or control simultaneously by starting up multiple web browsers. Do not set or control the projector from multiple computers.
- Change the password first. (➡ page 174)
- The administrator rights allow use of all functions. The user rights allow use of [Projector status] (➡ page 162), confirmation of the error information page (➡ page 163), [Network status] (➡ page 164), [Basic control] (➡ page 166), and [Change password] (➡ page 174) only.
- Access will be locked for few minutes when an incorrect password is entered three times consecutively.
- Some items on the projector setting page use the Javascript function of the web browser. The projector may not be able to be controlled properly if this function is disabled on the browser settings.
- If the screen for the web control is not displayed, consult your network administrator.
- While updating the screen for the web control, the screen may appear white for a moment, but it is not a malfunction.

Descriptions of items

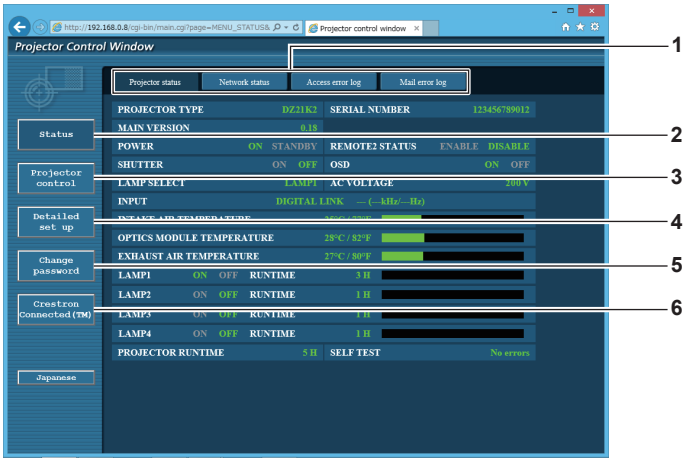

1 **Page tab**
Switches pages by clicking this item.

2 **[Status]**
The status of the projector is displayed by clicking this item.

3 **[Projector control]**
The [Projector control] page is displayed by clicking this item.

4 **[Detailed set up]**
The [Detailed set up] page is displayed by clicking this item.

5 **[Change password]**
The [Change password] page is displayed by clicking this item.

6 **[Crestron Connected(TM)]**
The operation page of Crestron Connected™ is displayed by clicking this item.

[Projector status] page

Click [Status] → [Projector status].
Display the status of the projector for the following items.

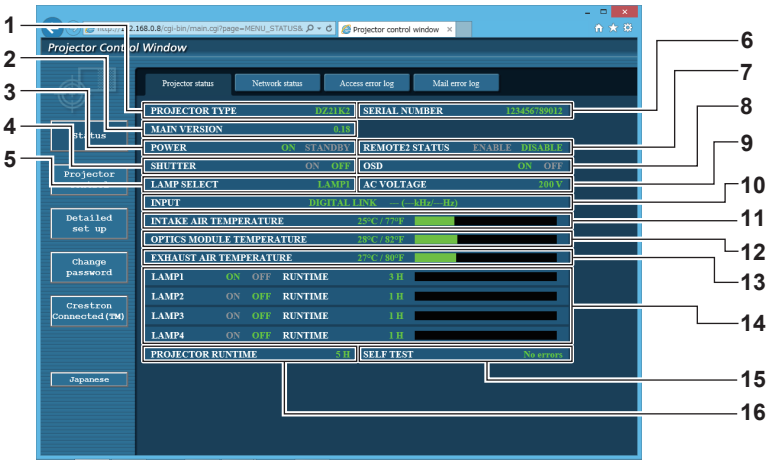

1 **[PROJECTOR TYPE]**
Displays the type of the projector.

2 **[MAIN VERSION]**
Displays the firmware version of the projector.

3 **[POWER]**
Displays the status of the power.

4 **[SHUTTER]**
Displays the status of shutter function (ON: enabled (closed), OFF: disabled (open)).

5 **[LAMP SELECT]**
Displays the setting status of [LAMP SELECT] (➡ page 126).

6 **[SERIAL NUMBER]**
Displays the serial number of the projector.

7 **[REMOTE2 STATUS]**
Displays the control status of the <REMOTE 2 IN> terminal.

8 **[OSD]**
Displays the status of the on-screen display.

9 **[AC VOLTAGE]**
Displays the input supply voltage.

10 **[INPUT]**
Displays the status of the selected input.

11 **[INTAKE AIR TEMPERATURE]**
Displays the status of the intake air temperature of the projector.

12 **[OPTICS MODULE TEMPERATURE]**
Displays the status of the internal temperature of the projector.

13 **[EXHAUST AIR TEMPERATURE]**
Displays the status of the exhaust air temperature of the projector.

14 **[LAMP1], [LAMP2], [LAMP3], [LAMP4], [RUNTIME]**
Displays the lighting status and runtime of the lamp.

15 **[SELF TEST]**
Displays the self-diagnosis information.

16 **[PROJECTOR RUNTIME]**
Displays the runtime of the projector.

Error information page

When [Error (Detail)] or [Warning (Detail)] is displayed in the [SELF TEST] display field of the **[Projector status]** screen, click it to display the content of the error/warning.

- The projector may go into the standby status to protect the projector depending on the contents of the error.

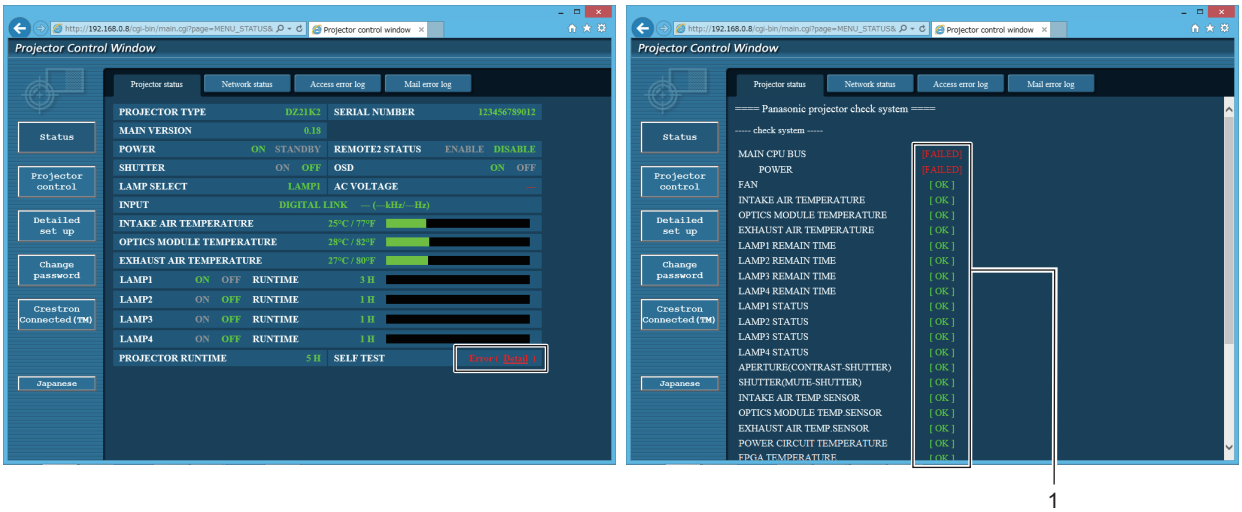

1 **Self-diagnosis result display**
Displays the item check results.
[OK]:
Indicates that operation is normal.
[FAILED]:
Indicates that there is a problem.
[WARNING]:
Indicates that there is a warning.

■ [FAILED] items

Item	Description
[MAIN CPU BUS]	There is a problem with the microcomputer circuitry. Consult your dealer.
[FAN]	There is a problem with the fan or the fan drive circuit. Consult your dealer.
[INTAKE AIR TEMPERATURE]	The intake air temperature is high. The projector may be used in an environment where the temperature is high, such as near a heating appliance.
[OPTICS MODULE TEMPERATURE]	The temperature around the optics module inside the projector is high. The projector may be used in an environment where the temperature is high, such as near a heating appliance.
[EXHAUST AIR TEMPERATURE]	The exhaust air temperature is high. The projector may be used in an environment where the temperature is high, such as near a heating appliance. Or the air exhaust port may be blocked.
[LAMP1 REMAIN TIME]	The runtime of the lamp has exceeded the specified time, and it is time to replace the lamp.
[LAMP2 REMAIN TIME]	
[LAMP3 REMAIN TIME]	
[LAMP4 REMAIN TIME]	
[LAMP1 STATUS]	The lamp has failed to turn on. Wait a while until the luminous lamp cools off, and then turn on the power.
[LAMP2 STATUS]	
[LAMP3 STATUS]	
[LAMP4 STATUS]	
[APERTURE(CONTRAST-SHUTTER)]	There is a problem with the contrast shutter circuitry. Consult your dealer.
[SHUTTER(MUTE-SHUTTER)]	There is a problem with the shutter circuitry. Consult your dealer.
[INTAKE AIR TEMP.SENSOR]	There is a problem with the sensor used to detect intake temperature. Consult your dealer.
[OPTICS MODULE TEMP.SENSOR]	There is a problem with the sensor used to detect temperature inside the projector. Consult your dealer.
[EXHAUST AIR TEMP.SENSOR]	There is a problem with the sensor used to detect exhaust air temperature. Consult your dealer.
[POWER CIRCUIT TEMPERATURE]	The temperature around the power circuit is high. The air intake port may be blocked.
[FPGA TEMPERATURE]	The temperature inside the projector is high. The air intake port may be blocked.
[LENS MOUNTER]	There is a problem in the lens mounter. Consult your dealer.
[COVER OPEN]	Installation of the lamp unit cover is incomplete. Check the installation of the lamp unit cover. (➡ page 184)

Item	Description
[BRIGHTNESS SENSOR]	There is a problem with the luminance sensor. If problems persist even after switching on the power, consult your dealer.
[ANGLE SENSOR]	There is a problem with the angle sensor. Consult your dealer.
[LAMP DRIVE MODE]	There is a problem with the lamp. Consult your dealer.
[FILTER UNIT]	The air filter unit is not attached. Check the connection of the air filter unit. (➡ page 181)

■ [WARNING] items

Item	Description
[INTAKE AIR TEMPERATURE]	The intake temperature is high. The projector may be used in an environment where the temperature is high, such as near a heating appliance.
[OPTICS MODULE TEMPERATURE]	The temperature around the optics module inside the projector is high. The projector may be used in an environment where the temperature is high, such as near a heating appliance.
[EXHAUST AIR TEMPERATURE]	The exhaust air temperature is high. The projector may be used in an environment where the temperature is high, such as near a heating appliance. Or the air exhaust port may be blocked.
[LAMP1 REMAIN TIME]	The runtime of the lamp has exceeded the specified time, and it is time to replace the lamp.
[LAMP2 REMAIN TIME]	
[LAMP3 REMAIN TIME]	
[LAMP4 REMAIN TIME]	
[POWER CIRCUIT TEMPERATURE]	The temperature around the power circuit is high. The air intake port may be blocked.
[FPGA TEMPERATURE]	The temperature inside the projector is high. The air intake port may be blocked.
[BATTERY]	Battery replacement is required. Consult your dealer.
[AIR FILTER]	There is too much dust accumulated in the air filter. Set the <MAIN POWER> switch to <OFF> (➡ page 64), and clean the air filter. (➡ page 181)
[AC VOLTAGE]	The input supply voltage is low. Use electric wiring that can sufficiently withstand the power consumption of the projector.
[LOW-TEMPERATURE]	The temperature around the optics module inside the projector is low. Projection cannot be started until the optics module becomes warm.
[SET THE TERMINALS DOWN]	Install with the connection terminals at the bottom.
[USE ONLY THE PORTRAIT LAMP]	Use the lamp for portrait mode.
[HORIZONTAL TILT]	The projector is used tilted at an angle that exceeds 15° from the horizontal plane.
[LAMP MIX]	Different types of lamps are used together. Use the lamps of the same type.
[LIGHT OUTPUT LIMIT]	The projector may be used in an environment where the temperature is high, and this function is limited to protect the projector.
[NOT SUPPORTED LAMP]	The lamp unit for portrait mode is attached. Replace the lamp unit to that for the projector.

[Network status] page

Click [Status] → [Network status].
The current network setting status is displayed.

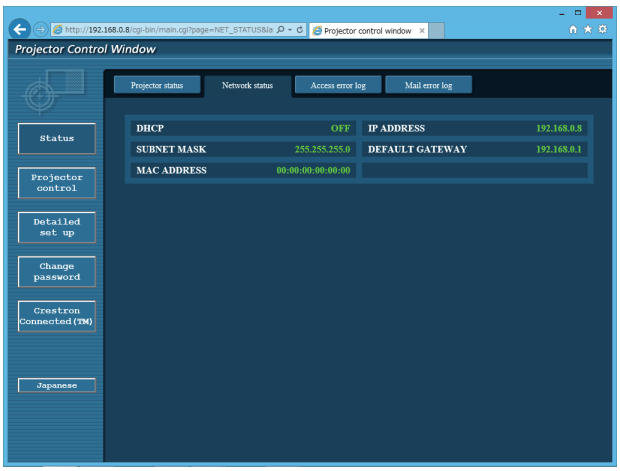

[Access error log] page

Click [Status] → [Access error log].
The error log on the web server is displayed such as access to the pages that do not exist or access with unauthorized user names or passwords.

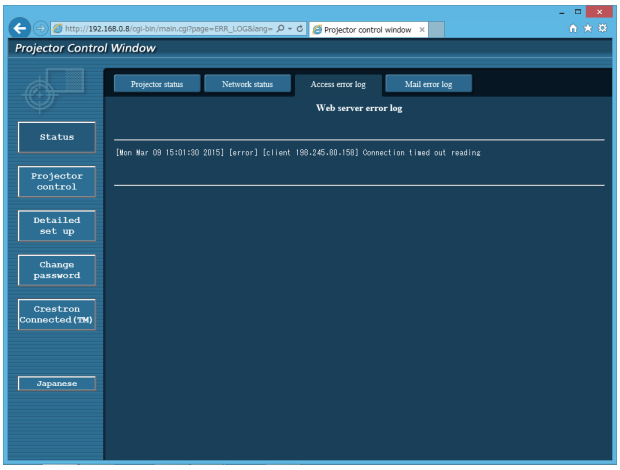

[Mail error log] page

Click [Status] → [Mail error log].
E-mail error log is displayed if periodic E-mail sending has failed.

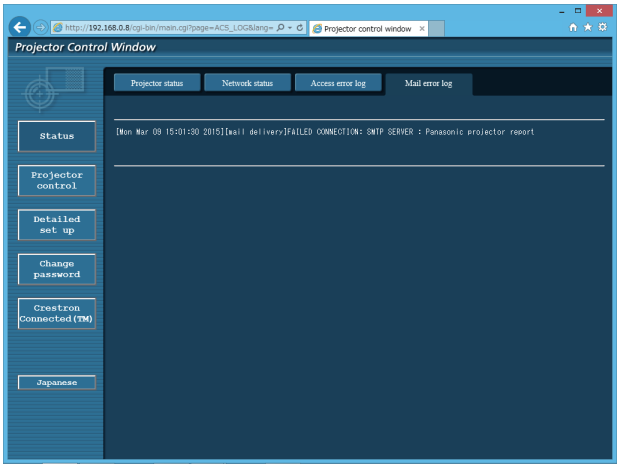

Note

- [Access error log] and [Mail error log] display the recent few thousand accesses/requests. All information may not be displayed when many accesses/requests are made at once.
- Logs in [Access error log] and [Mail error log] are deleted from the oldest when exceeding a certain amount.
- Check [Access error log] and [Mail error log] periodically.

[Basic control] page

Click [Projector control] → [Basic control].

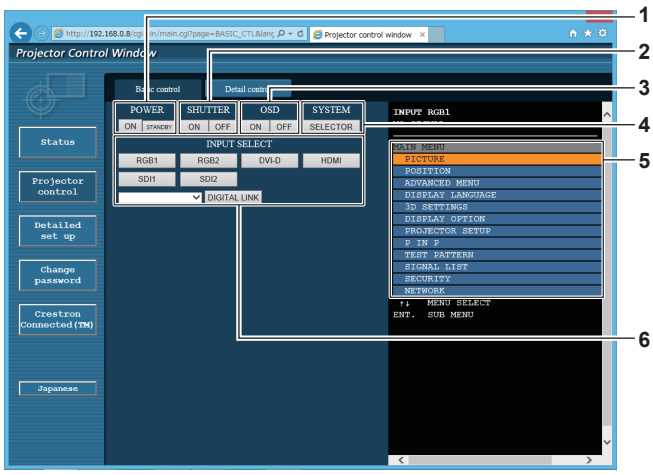

1 **[POWER]**
Turns on/off the power.

2 **[SHUTTER]**
Switches whether to use the shutter function (enabled (shutter: closed)/disabled (shutter: open)).

3 **[OSD]**
Switches on (display)/off (hide) the on-screen display function.

4 **[SYSTEM]**
Switches the system method.

5 **On-screen display of the projector**
Displays the same items as shown on the on-screen display of the projector. You can check or change the settings of the menus. It is displayed even if the on-screen display function is set to off (hide).

6 **[INPUT SELECT]**
Switches the input signal.
The content of display for the input selection button is different depending on the model of the projector.

[Detail control] page

Click [Projector control] → [Detail control].

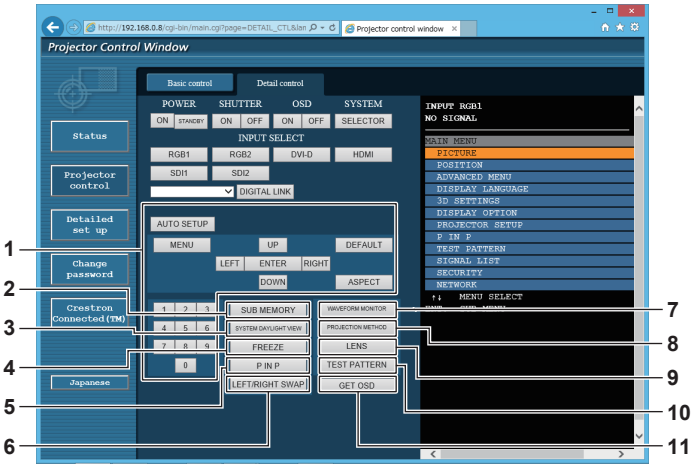

1 **Control of the projector**
The projector is controlled by clicking the buttons in the same way as the buttons on the remote control. After control, the on-screen display of the projector at the right of the control page is updated.

2 **[SUB MEMORY]**
Switches the sub memory.

3 **[SYSTEM DAYLIGHT VIEW]**
Switches to system daylight view settings.

4 **[FREEZE]**
Temporarily pauses the image.

5 **[P IN P]**
Switches the P IN P setting.

6 **[LEFT/RIGHT SWAP]**
Switches the flip horizontal settings.
(Only for PT-DZ21K2, PT-DS20K2)

7 **[WAVEFORM MONITOR]**
Displays the waveform of the input signal.

8 **[PROJECTION METHOD]**
Switches the setting of the projection method.

9 **[LENS]**
Adjusts the projection lens.

10 **[TEST PATTERN]**
Displays the test pattern.

11 **[GET OSD]**
Updates the on-screen display of the projector at the right of the control page.

[Network config] page

Click [Detailed set up] → [Network config].

- Click [Network config] to display the **[CAUTION!]** screen.
- The current settings are displayed by pressing the [Next] button.
- Click [Change] to display the setting change screen.

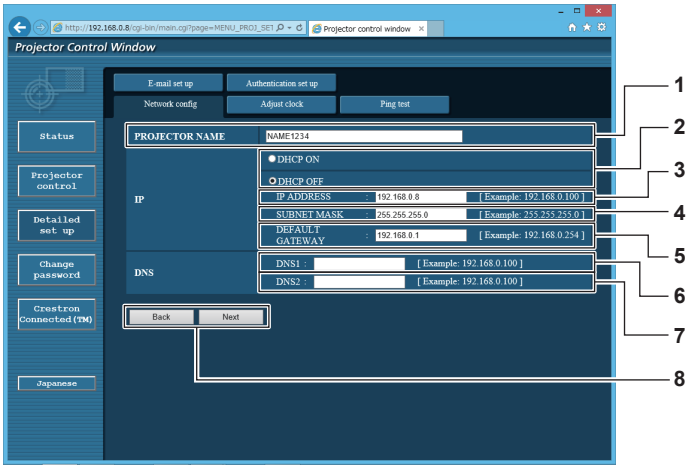

1 **[PROJECTOR NAME]**
Enter the name of the projector. Enter the host name if it is required when using a DHCP server etc.

2 **[DHCP ON], [DHCP OFF]**
To enable the DHCP client function, set to [DHCP ON].

3 **[IP ADDRESS]**
Enter the IP address when not using a DHCP server.

4 **[SUBNET MASK]**
Enter the subnet mask when not using a DHCP server.

5 **[DEFAULT GATEWAY]**
Enter the default gateway address when not using a DHCP server.

6 **[DNS1]**
Enter the DNS1 server address.
Permissible characters for the entry of DNS1 server address (primary):
Numbers (0 - 9), period (.)
(Example: 192.168.0.253)

7 **[DNS2]**
Enter the DNS2 server address.
Available characters for the entry of DNS2 server address (secondary):
Numbers (0 - 9), period (.)
(Example: 192.168.0.254)

8 **[Back], [Next]**
Click the [Back] button to return to the original screen. The current settings are displayed by pressing the [Next] button.
Click the [Submit] button to update the settings.

Note

- When you use the “Forward” and “Back” functions of your browser, a warning message “Page has Expired” may appear. In that case, click [Network config] again since the following operation will not be guaranteed.
- Changing LAN settings while connected to the LAN may cause the connection to cut out.

[Adjust clock] page

Click [Detailed set up] → [Adjust clock].

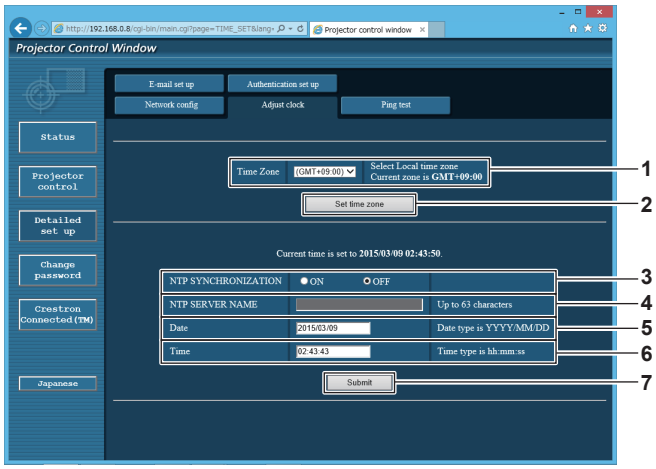

1 **[Time Zone]**
Select the time zone.

2 **[Set time zone]**
Updates the time zone setting.

3 **[NTP SYNCHRONIZATION]**
Set to [ON] to adjust the date and time automatically.

4 **[NTP SERVER NAME]**
Enter the IP address or server name of the NTP server when you set to adjust the date and time manually.
(To enter the server name, the DNS server needs to be set up.)

5 **[Date]**
Enter the date to be changed.

6 **[Time]**
Enter the time to be changed.

7 **[Submit]**
Updates the date and time settings.

Note

- The replacement of the battery inside the projector is required when the time goes out of alignment right after correcting the time. Consult your dealer.

[Ping test] page

Check whether the network is connected to the E-mail server, POP server, DNS server, etc.
Click [Detailed set up] → [Ping test].

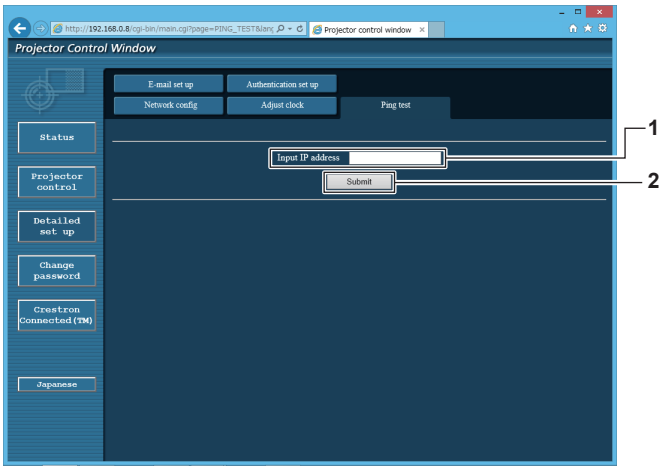


```
PING 192.168.0.50 (192.168.0.50): 56 data bytes
64 bytes from 192.168.0.50: seq=0 ttl=128 time=1 ms
64 bytes from 192.168.0.50: seq=1 ttl=128 time=1 ms
64 bytes from 192.168.0.50: seq=2 ttl=128 time=1 ms
64 bytes from 192.168.0.50: seq=3 ttl=128 time=1 ms

--- 192.168.0.50 ping statistics ---
4 packets transmitted, 4 packets received, 0% packet loss
round-trip min/avg/max = 1/1/1 ms
```

3

```
PING 192.168.0.51 (192.168.0.51): 56 data bytes

--- 192.168.0.51 ping statistics ---
4 packets transmitted, 0 packets received,100% packet loss
```

4

1 **[Input IP address]**
Enter the IP address of the server to be tested.

2 **[Submit]**
Executes the connection test.

3 **Example of display when the connection has succeeded**

4 **Example of display when the connection has failed**

[E-mail set up] page

When there is a problem or the runtime of a lamp reaches a set value, an E-mail can be sent to preset E-mail addresses (up to two addresses).

Click [Detailed set up] → [E-mail set up].

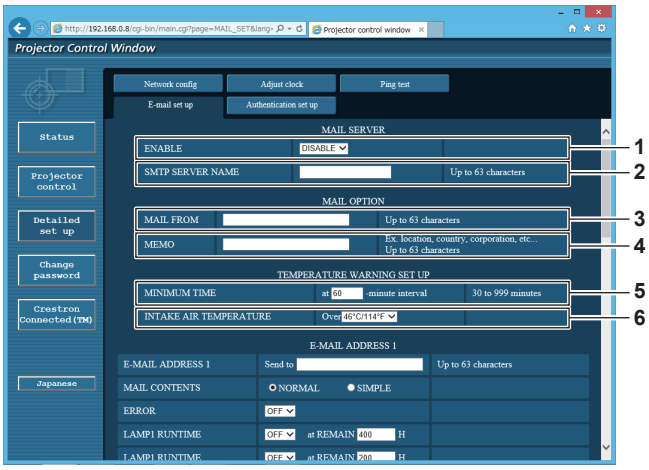

1 **[ENABLE]**
Select [Enable] to use the E-mail function.

2 **[SMTP SERVER NAME]**
Enter the IP address or the server name of the E-mail server (SMTP). To enter the server name, the DNS server needs to be set up.

3 **[MAIL FROM]**
Enter the E-mail address of the projector. (Up to 63 characters in single byte)

4 **[MEMO]**
Enter information such as the location of the projector that notifies the sender of the E-mail. (Up to 63 characters in single byte)

5 **[MINIMUM TIME]**
Change the minimum interval for the temperature warning E-mail. The default value is 60 minutes. In this case, another E-mail will not be sent for 60 minutes after sending the temperature warning E-mail even if it reaches the warning temperature.

6 **[INTAKE AIR TEMPERATURE]**
Change the temperature setting for the temperature warning mail. A temperature warning E-mail is sent when the temperature exceeds this value.

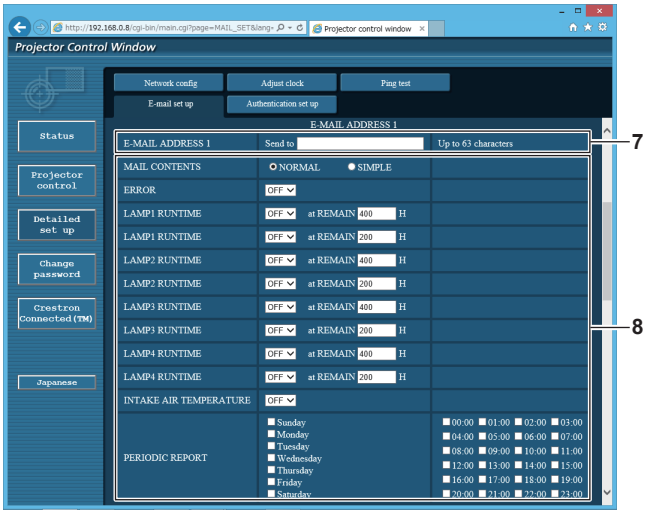

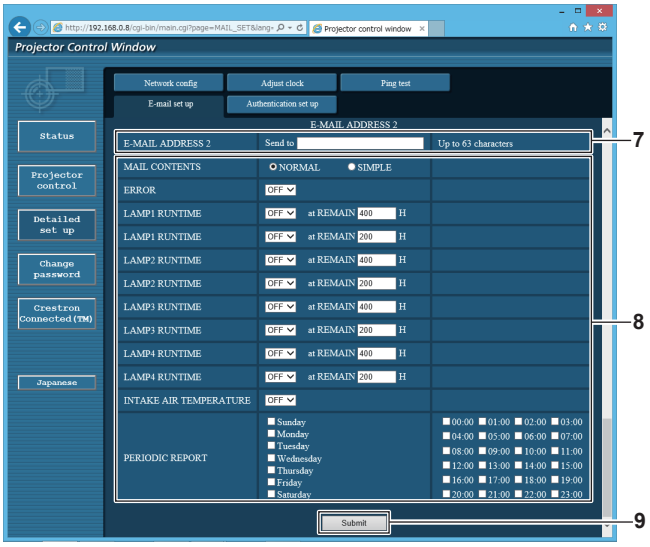

7 **[E-MAIL ADDRESS 1], [E-MAIL ADDRESS 2]**
Enter the E-mail address to be sent. Leave [E-MAIL ADDRESS 2] blank when two E-mail addresses are not to be used.

8 **Settings of the conditions to send E-mail**
Select the conditions to send E-mail.
[MAIL CONTENTS]:
Select either [NORMAL] or [SIMPLE].
[ERROR]:
Send an E-mail when an error occurred in the self-diagnosis.
[LAMP1 RUNTIME]:
Send an E-mail when the remaining lamp runtime for the lamp 1 has reached the value set at the right field.
[LAMP2 RUNTIME]:
Send an E-mail when the remaining lamp runtime for the lamp 2 has reached the value set at the right field.
[LAMP3 RUNTIME]:
Send an E-mail when the remaining lamp runtime for the lamp 3 has reached the value set at the right field.
[LAMP4 RUNTIME]:
Send an E-mail when the remaining lamp runtime for the lamp 4 has reached the value set at the right field.
[INTAKE AIR TEMPERATURE]:
Send an E-mail when the intake air temperature has reached the value set at the above field.
[PERIODIC REPORT]:
Place a check mark on this to send an E-mail periodically.
It will be sent on the days and time with the check mark.

9 **[Submit]**
Update the settings.

Note

- When using the optional Replacement lamp unit (for portrait mode) (Model. No.: ET-LAD520P (1 pc), ET-LAD520PF (4 pcs)), set each item for [LAMP1 RUNTIME] to [LAMP4 RUNTIME] to 500 hours or less.

[Authentication set up] page

Set the authentication items when POP authentication or SMTP authentication is necessary to send an E-mail.
Click [Detailed set up] → [Authentication set up].

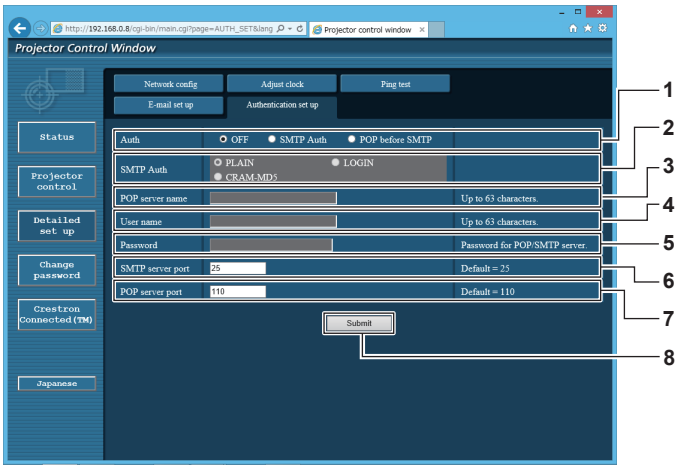

1 **[Auth]**
Select the authentication method specified by your Internet service provider.

2 **[SMTP Auth]**
Set when the SMTP authentication is selected.

3 **[POP server name]**
Enter the POP server name.
Allowed characters:
Alphanumerics (A - Z, a - z, 0 - 9)
Minus sign (-) and period (.)

4 **[User name]**
Enter the user name for the POP server or the SMTP server.

5 **[Password]**
Enter the password for the POP server or the SMTP server.

6 **[SMTP server port]**
Enter the port number of the SMTP server.
(Normally 25)

7 **[POP server port]**
Enter the port number of the POP server.
(Normally 110)

8 **[Submit]**
Update the settings.

Contents of E-mail sent

Example of the E-mail sent when E-mail is set

The following E-mail is sent when the E-mail settings have been established.

```
=== Panasonic projector report(CONFIGURE) ===
Projector Type        : DZ21K2
Serial No             : 123456789012

-----  E-mail setup data -----
TEMPERATURE WARNING SETUP
MINIMUM TIME              at [ 60] minutes interval
INTAKE AIR TEMPERATURE              Over [ 46degC / 114degF ]

ERROR        [ ON ]
LAMP1 RUNTIME           [ OFF ]   at REMAIN [ 400] H
LAMP1 RUNTIME           [ OFF ]   at REMAIN [ 200] H
LAMP2 RUNTIME           [ OFF ]   at REMAIN [ 400] H
LAMP2 RUNTIME           [ OFF ]   at REMAIN [ 200] H
LAMP3 RUNTIME           [ OFF ]   at REMAIN [ 400] H
LAMP3 RUNTIME           [ OFF ]   at REMAIN [ 200] H
LAMP4 RUNTIME           [ OFF ]   at REMAIN [ 400] H
LAMP4 RUNTIME           [ OFF ]   at REMAIN [ 200] H
INTAKE AIR TEMPERATURE              [ OFF ]
PERIODIC REPORT
Sunday      [ OFF ]  Monday   [ OFF ]  Tuesday   [ OFF ]  Wednesday   [ OFF ]
Thursday    [ ON  ]  Friday   [ OFF ]  Saturday  [ OFF ]

00:00  [ OFF ]    01:00  [ OFF ]    02:00  [ OFF ]    03:00  [ OFF ]
04:00  [ OFF ]    05:00  [ OFF ]    06:00  [ OFF ]    07:00  [ OFF ]
08:00  [ OFF ]    09:00  [ OFF ]    10:00  [ OFF ]    11:00  [ OFF ]
12:00  [ OFF ]    13:00  [ OFF ]    14:00  [ OFF ]    15:00  [ OFF ]
16:00  [ OFF ]    17:00  [ OFF ]    18:00  [ OFF ]    19:00  [ OFF ]
20:00  [ OFF ]    21:00  [ OFF ]    22:00  [ OFF ]    23:00  [ OFF ]

-----  check system -----
MAIN CPU BUS                        [   OK   ]
     POWER                          [   OK   ]
FAN                                 [   OK   ]
EXHAUST1-FAN                        [   OK   ]
EXHAUST2-FAN                        [   OK   ]
EXHAUST3-FAN                        [   OK   ]
EXHAUST4-FAN                        [   OK   ]
                                    [   OK   ]
                                    [   OK   ]
OPTICS MODULE TEMP.SENSOR
EXHAUST AIR TEMP.SENSOR
POWER CIRCUIT TEMPERATURE           [   OK
FPGA  TEMPERATURE                   [   OK   ]
BATTERY                             [   OK   ]
LENS MOUNTER                        [   OK   ]
COVER OPEN                          [   OK   ]
BRIGHTNESS SENSOR                   [   OK   ]
ANGLE SENSOR                        [   OK   ]
LAMP DRIVE MODE                     [   OK   ]
AIR FILTER CASE                     [   OK   ]
AIR FILTER                          [   OK   ]
AC VOLTAGE                          [   OK   ]
(Error code 00 00 00 00 00 00 00 00 00 00 00 00 00 00 00 00 00 00)

Intake air temperature       : 27 degC /  80 degF
Optics module temperature : 33 degC /  91 degF
Exhaust air temperature      : 32 degC /  89 degF
PROJECTOR RUNTIME          5 H
POWER ON                  11 times
LAMP1 ON                   1 times
LAMP1                      0 H
LAMP1 REMAIN            2999 H
LAMP2 ON                   1 times
LAMP2                      0 H
LAMP2 REMAIN            2999 H
LAMP3 ON                   1 times
LAMP3                      0 H
LAMP3 REMAIN            2999 H
LAMP4 ON                   1 times
LAMP4                      0 H
LAMP4 REMAIN            2999 H


-------- Current status ---------
MAIN VERSION            0.17
SUB VERSION             0.02.01
LAMP STATUS             LAMP1=ON LAMP2=OFF LAMP3=OFF LAMP4=OFF
INPUT DIGITAL LINK
SIGNAL NAME             ---
SIGNAL FREQUENCY        ---kHz / ---Hz
REMOTE2 STATUS DISABLE

----- Wired Network configuration -----
DHCP Client        OFF
IP address         192.168.0.8
MAC address        00:00:00:00:00:00

Mon Jan 01 12:34:56 20XX

----- Memo -----
```

Example of the E-mail sent for an error

The following E-mail is sent when an error has occurred.

```
=== Panasonic projector report(ERROR) ===
Projector Type        : DZ21K2
Serial No             : 123456789012

-----  check system -----
MAIN CPU BUS                          [FAILED]
      POWER                           [FAILED]
FAN                                   [  OK  ]
EXHAUST1-FAN                          [  OK  ]
EXHAUST2-FAN                          [  OK  ]
EXHAUST3-FAN                          [  OK  ]
EXHAUST4-FAN                          [  OK  ]
INTAKE1-FAN                           [  OK  ]
INTAKE2-FAN                           [  OK  ]
LAMP1-FAN                             [  OK  ]
LAMP2-FAN                             [  OK  ]
LAMP3-FAN                             [  OK  ]
LAMP4-FAN                             [  OK  ]
BALLAST1-FAN                          [  OK  ]
BALLAST2-FAN                          [  OK  ]
LAMP-L-FAN                            [  OK  ]
LAMP-R-FAN                            [  OK  ]
C-PRISM1-FAN                          [  OK  ]
C-PRISM2-FAN                          [  OK  ]
C-PRISM3-FAN                          [  OK  ]
PUMP-R                                [  OK  ]
PUMP-G                                [  OK  ]
INTAKE AIR TEMPERATURE                [  OK  ]
OPTICS MODULE TEMPERATURE             [  OK  ]
EXHAUST AIR TEMPERATURE               [  OK  ]
LAMP1 REMAIN TIME                     [  OK  ]
LAMP2 REMAIN TIME                     [  OK  ]
LAMP3 REMAIN TIME                     [  OK  ]
LAMP4 REMAIN TIME                     [  OK  ]
LAMP1 STATUS                          [  OK  ]
LAMP2 STATUS                          [  OK  ]
LAMP3 STATUS                          [  OK  ]
LAMP4 STATUS                          [  OK  ]
APERTURE(CONTRAST-SHUTTER)            [  OK  ]
SHUTTER(MUTE-SHUTTER)                 [  OK  ]
INTAKE AIR TEMP.SENSOR                [  OK  ]
OPTICS MODULE TEMP.SENSOR             [  OK  ]
EXHAUST AIR TEMP.SENSOR               [  OK  ]
POWER CIRCUIT TEMPERATURE             [  OK  ]
FPGA  TEMPERATURE                     [  OK  ]
BATTERY                               [  OK  ]
LENS MOUNTER                          [  OK  ]
COVER OPEN                            [  OK  ]
BRIGHTNESS SENSOR                     [  OK  ]
ANGLE SENSOR                          [  OK  ]
LAMP DRIVE MODE                       [  OK  ]
AIR FILTER CASE                       [  OK  ]
AIR FILTER                            [  OK  ]
AC VOLTAGE                            [  OK  ]
(Error code 80 00 00 00 00 00 00 00 00 00 00 00 00 00 00 00 00)

Intake air temperature       : 27 degC /  80 degF
Optics module temperature : 33 degC /  91 degF
Exhaust air temperature      : 32 degC /  89 degF
PROJECTOR RUNTIME              5 H
POWER ON                      11 times
LAMP1 ON                       1 times
LAMP1                          0 H
LAMP1 REMAIN                2999 H
LAMP2 ON                       1 times
LAMP2                          0 H
LAMP2 REMAIN                2999 H
LAMP3 ON                       1 times
LAMP3                          0 H
LAMP3 REMAIN                2999 H
LAMP4 ON                       1 times
LAMP4                          0 H
LAMP4 REMAIN                2999 H


-------- Current status ---------
MAIN VERSION              0.17
SUB VERSION               0.02.01
LAMP STATUS               LAMP1=ON LAMP2=OFF LAMP3=OFF LAMP4=OFF
INPUT DIGITAL LINK
SIGNAL NAME               ---
SIGNAL FREQUENCY          ---kHz / ---Hz
REMOTE2 STATUS DISABLE

----- Wired Network configuration -----
DHCP Client          OFF
IP address           192.168.0.8
MAC address          00:00:00:00:00:00

Mon Jan 01 12:34:56 20XX

----- Memo -----
```

[Change password] page

Click [Change password].

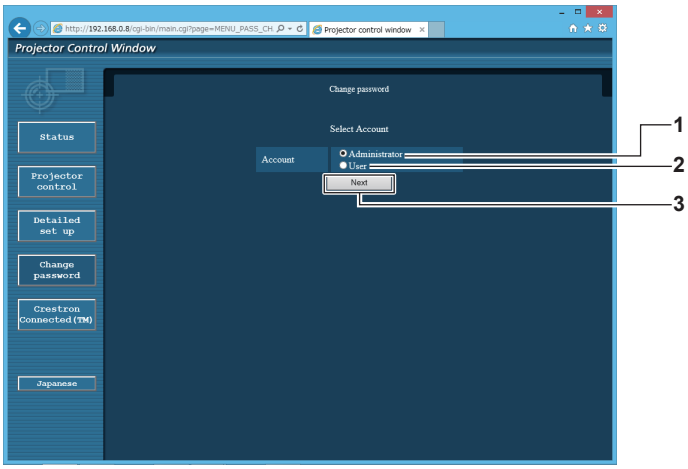

1 **[Administrator]**
Used to change the setting of the [Administrator].

2 **[User]**
Used to change the setting of the [User].

3 **[Next]**
Used to change the setting of the password.

[Administrator] account

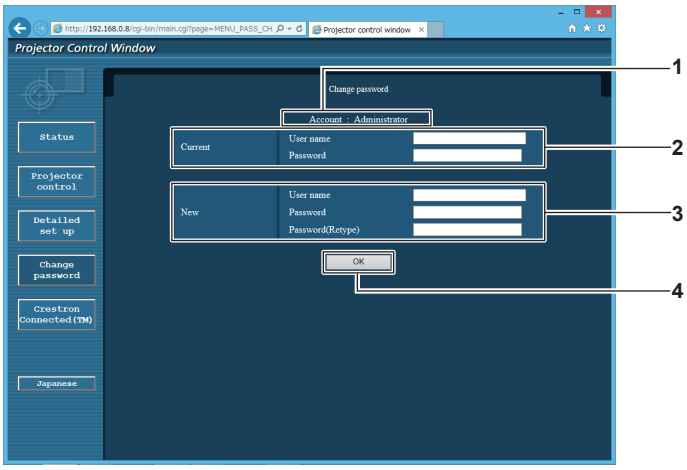

1 **[Account]**
Displays the account to change.

2 **[Current]**
[User name]:
Enter the user name before the change.
[Password]:
Enter the current password.

3 **[New]**
[User name]:
Enter the desired new user name. (Up to 16 characters in single byte)
[Password]:
Enter the desired new password. (Up to 16 characters in single byte)
[Password(Retype)]:
Enter the desired new password again.

4 **[OK]**
Determines the change of password.

[User] account

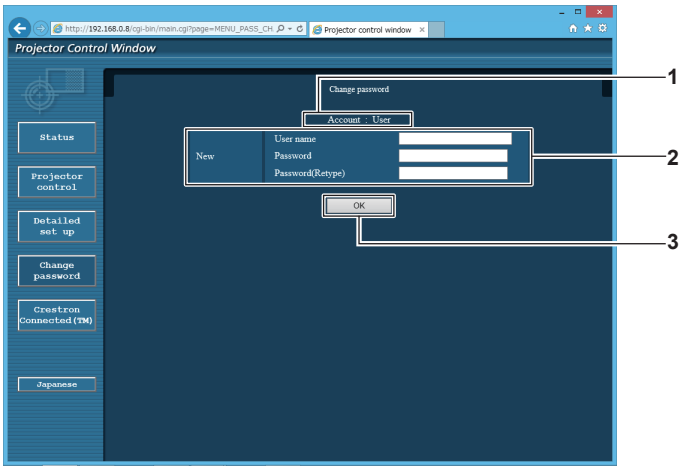

1 **[Account]**
Displays the account to change.

2 **[New]**
[User name]:
Enter the desired new user name. (Up to 16 characters in single byte)
[Password]:
Enter the desired new password. (Up to 16 characters in single byte)
[Password(Retype)]:
Enter the desired new password again.

3 **[OK]**
Determines the change of password.

[Change password] (For user rights)

Only the change of password is enabled under the user rights.

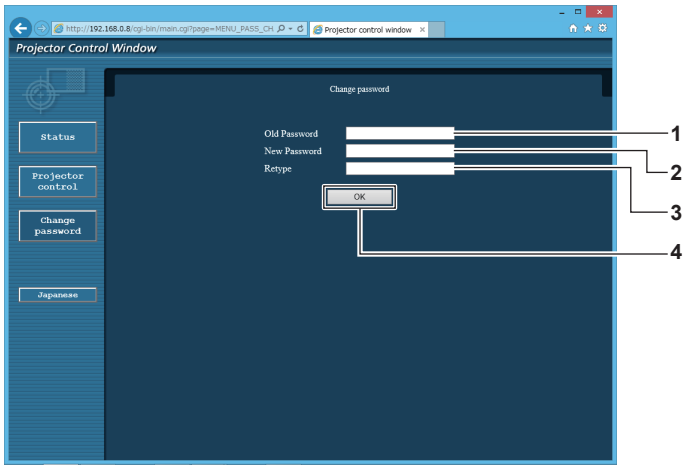

1 **[Old Password]**
Enter the current password.

2 **[New Password]**
Enter the desired new password. (Up to 16 characters in single byte)

3 **[Retype]**
Enter the desired new password again.

4 **[OK]**
Determines the change of password.

Note

- To change the account of the administrator, you must enter the [User name] and [Password] in [Current].

[Crestron Connected(TM)] page

The projector can be monitored/controlled with Crestron Connected™.
It is necessary to access with the administrator rights to start the operation screen of Crestron Connected™ from the web control screen. (The [Crestron Connected(TM)] button is not displayed in the web control screen with the user rights.)
The operation page of Crestron Connected™ is displayed by clicking [Crestron Connected(TM)].
It is not displayed if Adobe Flash Player is not installed on your computer, or the browser you use does not support Flash. In such a case, click [Back] in the operation page to go back to the previous page.

Operation page

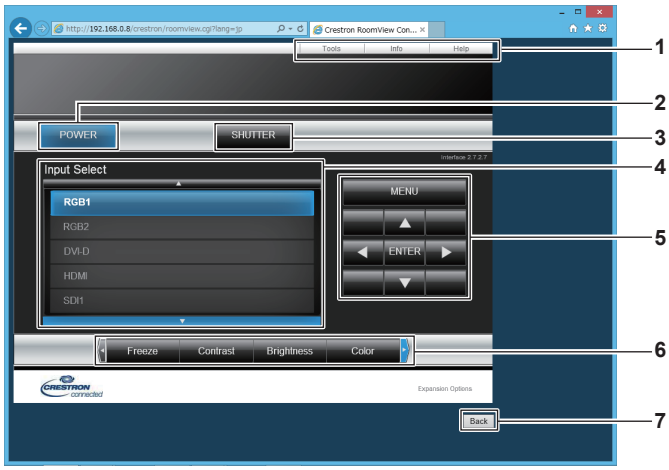

1 **[Tools], [Info], [Help]**
Tabs for selecting the setting, information, or help page of the projector.

2 **[POWER]**
Turns on/off the power.

3 **[SHUTTER]**
Switches whether to use the shutter function (enabled (shutter: closed)/disabled (shutter: open)).

4 **[Input Select]**
Controls input selection.
Not available when the power of the projector is turned off.

5 **Menu screen control buttons**
Navigates the menu screen.

6 **Freeze/image quality adjustment**
Controls items related to freeze/image quality.

7 **[Back]**
Returns to the previous page.

[Tools] page

Click [Tools] in the operation page.

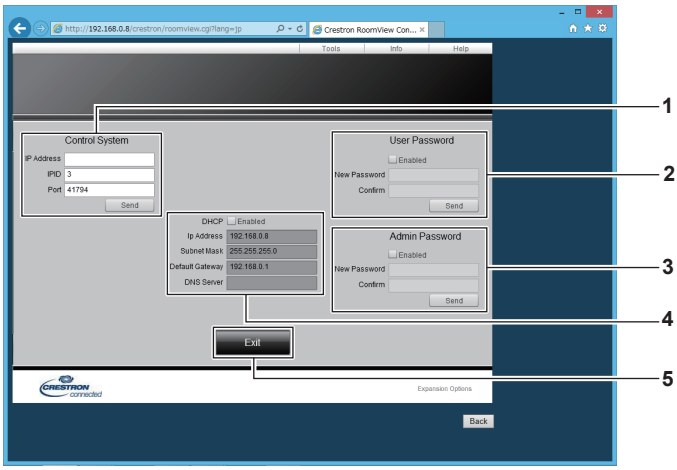

1 **[Control System]**
Set the information required for communicating with the controller to be connected with the projector.

2 **[User Password]**
Set the user rights password for the operation page of Crestron Connected™.

3 **[Admin Password]**
Set the administrator rights password for the operation page of Crestron Connected™.

4 **Network status**
Displays the settings of wired LAN.
[DHCP]
Displays the current setting.
[Ip Address]
Displays the current setting.
[Subnet Mask]
Displays the current setting.
[Default Gateway]
Displays the current setting.
[DNS Server]
Displays the current setting.

5 **[Exit]**
Returns to the operation page.

[Info] page

Click [Info] in the operation page.

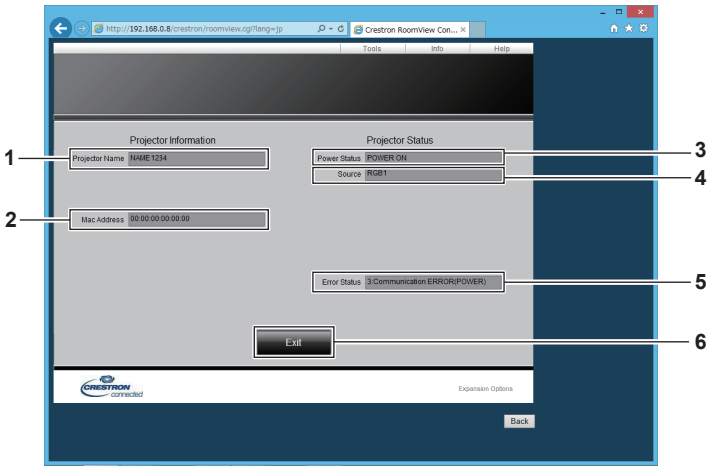

1 **[Projector Name]**
Displays the projector name.

2 **[Mac Address]**
Displays the MAC address.

3 **[Power Status]**
Displays the status of the power.

4 **[Source]**
Displays the selected input.

5 **[Error Status]**
Displays the error status.

6 **[Exit]**
Returns to the operation page.

[Help] page

Click [Help] in the operation page.
The [Help Desk] window is displayed.

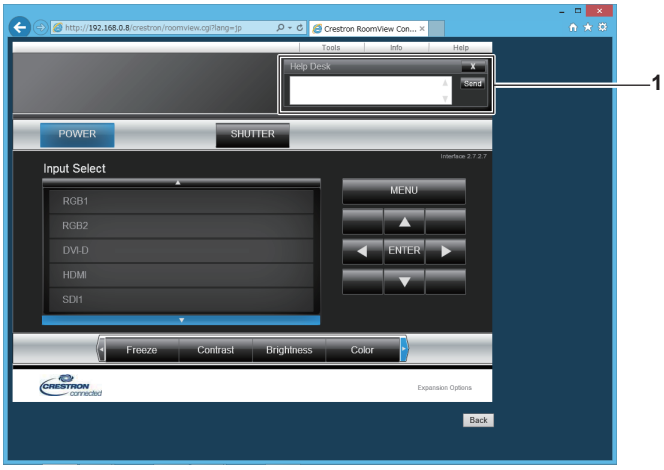

1 **[Help Desk]**
A message can be sent/received with the administrator using the Crestron Connected™.

Chapter 5 Maintenance

This chapter describes methods of inspection when there are problems, maintenance, and replacement of the units.

Lamp/temperature/filter indicators

When an indicator lights up

If a problem should occur inside the projector, the lamp indicators <LAMP1>/<LAMP2>/<LAMP3>/<LAMP4>, the temperature indicator <TEMP>, and the filter indicator <FILTER> will inform you by lighting or blinking. Check the status of the indicators and manage the indicated problems as follows.

Attention

- When switching off the projector to deal with problems, make sure to follow the procedure in “Switching off the projector” (➡ page 64).

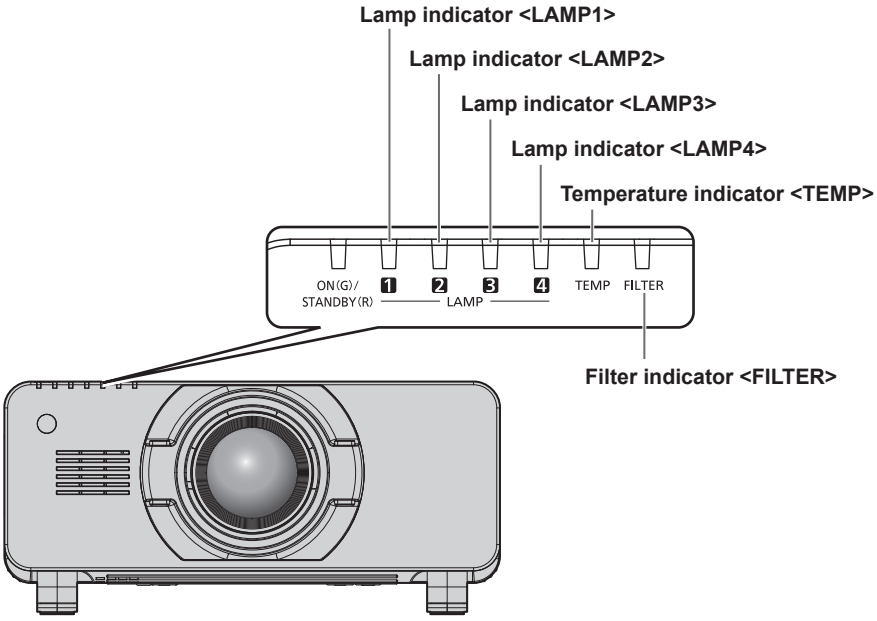

Lamp indicators <LAMP1>/<LAMP2>/<LAMP3>/<LAMP4>

Indicator status	Lighting in red/lighting in orange*1	Blinking in red (1 time)	Blinking in red (3 times)	
Status	Time to replace the lamp unit. (➡ page 184)	The lamp unit or the lamp case is not installed.	A problem is detected in the lamp or the power supply for the lamp.	
Cause	• Was [REPLACE LAMP] displayed when you turned on the power? • The indicator lights up when the runtime of the lamp unit reaches 2 800*2 hours.	• Is the lamp unit or the lamp case installed?	• Have you turned on the power again immediately after turning it off?	• Some error has occurred in the lamp circuit. Check for fluctuation (or drop) in the input supply voltage.
Solution	• Replace the lamp unit.	• Install the lamp unit or the lamp case if it is not installed. • If the indicator is still blinking in red even when having installed the lamp unit or the lamp case, consult your dealer.	• Wait a while until the luminous lamp cools off, and then turn on the power.	• Turn the <MAIN POWER> switch to <OFF> (➡ page 64), and consult your dealer.

*1 The indicator lights up in red while the lamp is turned off, and lights up in orange while the lamp is turned on.
*2 800 hours when using the optional Replacement lamp unit (for portrait mode) (Model No.: ET-LAD520P (1 pc), ET-LAD520PF (4 pcs)).

Note

- If the lamp indicators <LAMP1>/<LAMP2>/<LAMP3>/<LAMP4> are still lit or blinking after taking the measures, ask your dealer for repair.

Temperature indicator <TEMP>

Indicator status	Lighting in red		Blinking in red (2 times)	Blinking in red (3 times)
Status	Warm-up status	Internal temperature is high (warning).	Internal temperature is high (standby status).	The cooling fan has stopped.
Cause	• Did you turn on the power when the temperature was low (around 0 °C (32 °F))?	• Is the air intake/exhaust port blocked? • Is the room temperature high? • Is the filter indicator <FILTER> lit?		—
Solution	• Wait approximately 5 minutes (PT-DZ16K2: up to 20 minutes) in the current status. • Install the projector in a location with the operating environment temperature between 0 °C (32 °F) and 45 °C (113 °F)*1.	• Remove any objects that are blocking the air intake/ exhaust port. • Install the projector in a location with the operating environment temperature between 0 °C (32 °F) and 45 °C (113 °F)*1, and ambient humidity between 20 % and 80 % (no condensation). • Do not use the projector at high altitudes of 2 700 m (8 858') or higher above sea level. • Clean or replace the air filter unit. (➡ page 181)		• Turn the <MAIN POWER> switch to <OFF> (➡ page 64), and consult your dealer.

*1 When using the projector at high altitudes (between 1 400 m (4 593') and 2 700 m (8 858') above sea level), the operating environment temperature should be between 0 °C (32 °F) and 40 °C (104 °F).
If you use the smoke cut filter, the operating environment temperature should be between 0 °C (32 °F) and 35 °C (95 °F). However, it cannot be used at high altitudes.
If you use the Replacement lamp unit (for portrait mode), the operating environment temperature should be between 0 °C (32 °F) and 40 °C (104 °F) when using it at elevations lower than 1 400 m (4 593') above sea level, and should be between 0 °C (32 °F) and 35 °C (95 °F) when using it at high altitudes (between 1 400 m (4 593') and 2 700 m (8 858') above sea level). If you use the Replacement lamp unit (for portrait mode) together with the smoke cut filter, the operating environment temperature should be between 0 °C (32 °F) and 30 °C (86 °F). (Only for PT-DZ21K2, PT-DS20K2, PT-DW17K2)

Note

- If the temperature indicator <TEMP> is still lit or blinking after taking the measures, ask your dealer for repair.

Filter indicator <FILTER>

Indicator status	Lighting in red			Blinking in red
Status	The filter is clogged. The temperature inside or outside the projector is abnormally high.			The air filter unit is not attached.
Cause	• Is the air filter unit dirty?	• Is the air intake/exhaust port blocked?	• Are you using the projector at elevations of 2 700 m (8 858') or higher above sea level?	• Is the air filter unit attached?
Solution	• Clean or replace the air filter unit. (➡ page 181)	• Remove any objects that are blocking the air intake/ exhaust port.	• Do not use the projector at elevations of 2 700 m (8 858') or higher above sea level.	• Attach the air filter unit.

Note

- If the filter indicator <FILTER> is still lit or blinking after taking the measures, ask your dealer for repair.
- If the filter is clogged while [LAMP SELECT] is set to [QUAD] or [TRIPLE], the setting may be forcibly changed to [DUAL]. To reset the setting, clean the air filter unit or replace it with a new one.

Maintenance/replacement

Before performing maintenance/replacement

- Make sure to turn off the power before maintaining or replacing the unit. (➡ pages 58, 64)
- When switching off the projector, make sure to follow the procedures in “Switching off the projector” (➡ page 64).

Maintenance

Outer case

Wipe off dirt and dust with a soft, dry cloth.
- If the dirt is persistent, soak the cloth with water and wring it thoroughly before wiping. Dry off the projector with a dry cloth.
- Do not use benzene, thinner, or rubbing alcohol, other solvents, or household cleaners. Doing so may deteriorate the outer case.
- When using chemically treated dust cloths, follow the instructions written on its packaging.

Lens front surface

Wipe off dirt and dust from the front surface of the lens with a soft clean cloth.
- Do not use a cloth that is fluffy, dusty, or soaked with oil/water.
- Since the lens is fragile, do not use excessive force when wiping the lens.

Attention

- The lens is made of glass. Impacts or excessive force when wiping may scratch its surface. Handle with care.

Air filter unit

Perform maintenance of the air filter unit in the following cases.
- The air filter is clogged with dust, causing the filter replacement message to appear on the screen and the filter indicator <FILTER> to light in red.

Attention

- Make sure to turn off the power before performing maintenance on the air filter unit.
- Make sure that the projector is stable, and perform the maintenance in a safe place even if you drop it accidentally.

Removing the air filter unit

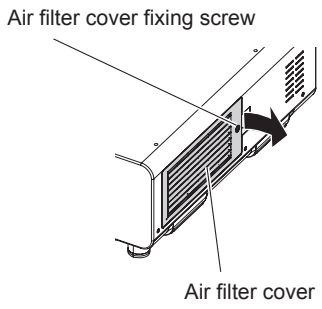

Fig. 1

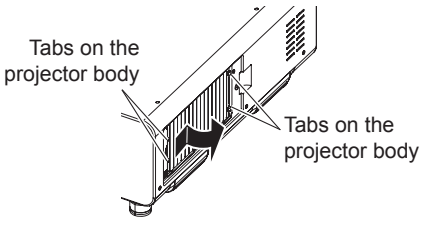

Fig. 2

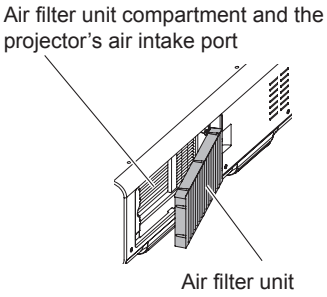

Fig. 3

1) Remove the air filter cover. (Fig. 1)
- Use a Phillips screwdriver to turn the air filter cover screw counterclockwise until it turns freely, and then remove the air filter cover.
- Loosen the air filter cover fixing screw while putting your hand on.

2) Pull out the air filter unit.
- Pull out the air filter unit frame from the tabs of the projector body while slightly pressing around the center of the frame at the front side (with the lens) inward as described with the arrow, and pull out the frame at the opposite side from the tabs to remove the air filter unit. **(Fig. 2)**

- After pulling out the air filter unit, remove large foreign objects and dust from the air filter unit compartment and the air intake port of the projector body if there are any. **(Fig. 3)**

Cleaning the air filter unit

Remove the air filter unit beforehand with the previously described procedure of “Removing the air filter unit”.

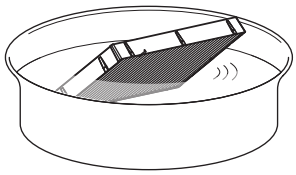

Fig. 1

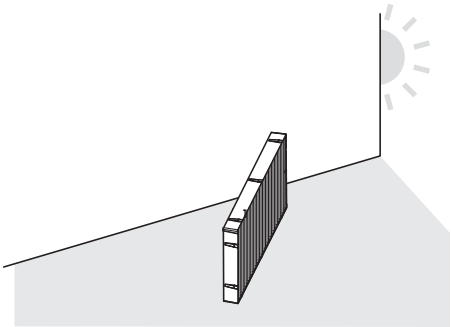

Fig. 2

1) Wash the air filter unit. (Fig. 1)

i) Soak the air filter unit in cold or warm water and then lightly rinse it.
- Do not use cleaning tools such as brushes.
- When rinsing, hold the frame of the air filter unit without putting strong pressure on the filter unit.

ii) Rinse the air filter unit two to three times using fresh water each time.
- Insufficient rinsing may result in odors.

2) Dry the air filter unit. (Fig. 2)
- Let the air filter unit naturally dry off in a well-ventilated place where there is little dust and is not exposed to direct sunlight.
- Do not dry using drying devices such as dryers.
- After the air filter is dried, proceed to “Attaching the air filter unit” (➡ page 182).

Attaching the air filter unit

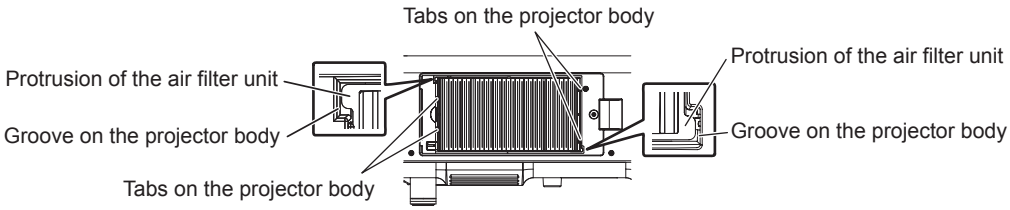

1) Attach the air filter unit to the projector.
- The air filter unit has no difference between top and bottom, but is two-sided. Match the protrusion position of the air filter unit with the grooves on the projector body.
- Hook the air filter unit frame at the air exhaust port side to the two tabs of the back side of the projector’s air filter unit compartment and perform Step **2)** in “Removing the air filter unit” in the reverse order to attach.
- Confirm that the tabs of the air filter unit compartment of the projector body are hooked to the air filter unit frame.

2) Attach the air filter cover to the projector and use a Phillips screwdriver to tighten the air filter cover screw.
- Attach the air filter cover by performing Step **1)** in “Removing the air filter unit” (➡ page 181) in the reverse order.

Attention

- After washing the air filter unit, dry it thoroughly before attaching it back to the projector. Attaching a wet unit will cause an electric shock or malfunction.
- Do not disassemble the air filter unit.
- Take care not to touch the radiator fin when removing dirt or dust.

Note

- Make sure that the air filter unit is properly attached before using the projector. If it is not properly attached, the projector will suck in dirt and dust causing a malfunction.
- If you use the projector without attaching the air filter unit, the filter indicator <FILTER> blinks in red and the message appears on the projected image for approximately 30 seconds.
- Replace the air filter unit with the new optional Replacement filter unit (Model No.: ET-EMF510) if it is damaged or if the dirt does not come off even after washing.
- Air filter replacement is recommended after cleaning the unit two times.
- The dust-proof properties may be reduced after each cleaning.

Replacing the unit

Lamp unit

The lamp unit is a consumable component. Refer to “When to replace the lamp unit” (➡ page 184) for details about the replacement cycle.

When purchasing the optional Replacement lamp unit (Model No.: ET-LAD520 (1 pc), ET-LAD520F (4 pcs)) and the optional Replacement lamp unit (for portrait mode) (Model No.: ET-LAD520P (1 pc), ET-LAD520PF (4 pcs)), consult your dealer.

It is recommended that you request a qualified technician to replace the lamp unit. Consult your dealer.

WARNING

Replace the lamp unit after the lamp has cooled (after waiting at least one hour).
The high temperature inside the cover will cause burns.

Checking the lamp unit to be replaced

1) Check the status of the lamp indicators <LAMP1>/<LAMP2>/<LAMP3>/<LAMP4> of the projector.

- The lamp unit corresponding to the lamp indicator that is lit in red is required to be replaced.

Notes on the replacement of the lamp unit

- A Phillips screwdriver is necessary when replacing the lamp unit.
- Since the luminous lamp is made of glass, it may burst if dropped or hit with a hard object. Handle with care.
- Do not disassemble or modify the lamp unit.
- When replacing the lamp unit, be sure to hold it by the handle because its surface is pointed and its shape is protruded.
- The lamp may rapture. Replace the lamp unit carefully so that the glass fragments of the lamp do not scatter. While attaching the projector to the ceiling, do not work right under the lamp unit or do not conduct work while your face is near the lamp unit.
- The lamp contains mercury. When disposing of used lamp units, contact your local authorities or dealer for correct methods of disposal.

Attention

- Panasonic takes no responsibility for any damage or malfunction of the product resulting from use of lamp units which are not manufactured by Panasonic. Use only specified lamp units.
- For the portrait setting, be sure to use the Replacement lamp unit (for portrait mode).
- Do not use the Replacement lamp unit (for portrait mode) and normal lamp unit together.
- Use the Replacement lamp unit (for portrait mode) only when installing the projector in the portrait setting.

Note

- The model numbers of accessories and optional accessories are subject to change without prior notice.

When to replace the lamp unit

The lamp unit is a consumable component. Since its brightness gradually decreases over time, it is necessary to replace the lamp unit regularly. The estimated duration before replacement is 3 000 hours, but the lamp may go off before reaching 3 000 hours, depending on the characteristics of the individual lamp, usage conditions, and the installation environment. It is recommended that the replacement lamp unit be prepared earlier.

If you continue to use the lamp unit after 3 000 hours has elapsed, the lamp turns off automatically after approximately 10 minutes, as it may cause malfunction of the projector.

The projector will go into standby mode in approximately 10 minutes after the runtime of all four lamp units exceeds 3 000 hours.

	On-screen display	Lamp indicator
	REPLACE LAMP	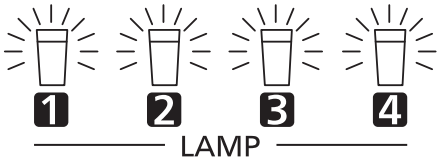
Over 2 800 hours	The message is displayed for 30 seconds. Pressing any button on the control panel or remote control within 30 seconds will clear the message.	The indicator lights in red even during the standby mode. (Only the corresponding lamp lights on.)
Over 3 000 hours	The message remains displayed until you press any button.	

Note

- To predict when to replace the lamp, check the lamp runtime displayed in [LAMP1] to [LAMP4] of [STATUS] (➡ page 137).
- The runtime of 3 000 hours is a rough estimate and is not guaranteed.
- The estimated duration before replacing the Replacement lamp unit (for portrait mode) is 1 000 hours. The on-screen message for replacing the lamp appears after 800 hours.

How to replace the lamp unit

Attention

- When the projector is mounted on the ceiling, do not conduct work while your face is near the lamp unit.
- Do not remove or loosen the screws other than specified ones when replacing the lamp unit.
- Use the same type of lamp unit for all four lamps.

Note

- When you replace the lamp unit with new one, the projector resets the runtime of the lamp unit automatically.
- You will feel a jam when removing or attaching the lamp case, but that is because of the stopper for drop prevention and not a problem.

Removing the lamp unit

WARNING

When replacing the lamp unit with the projector installed upward in the vertical direction, make sure to support the lamp unit cover with your hand while loosening the lamp unit cover fixing screw.
The lamp unit cover may open on its weight and may drop off, causing a serious accident or injury.

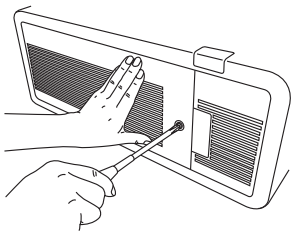

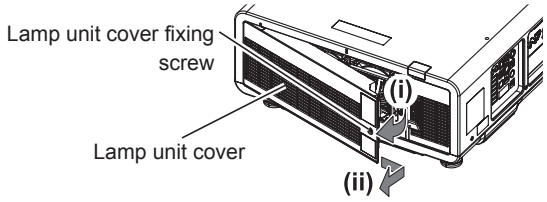

Fig. 1

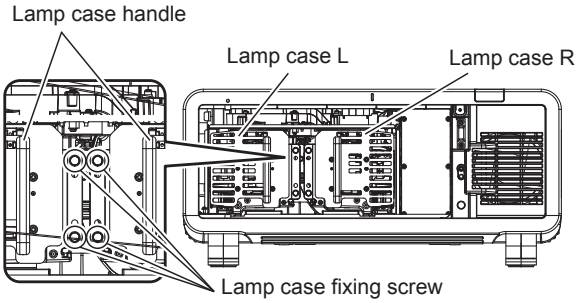

Fig. 2

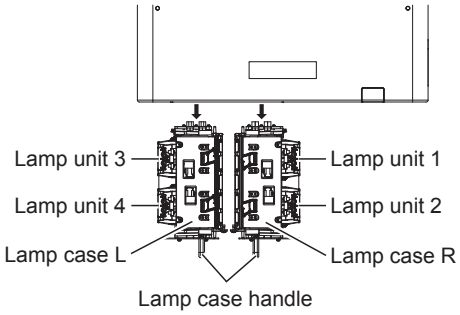

Fig. 3

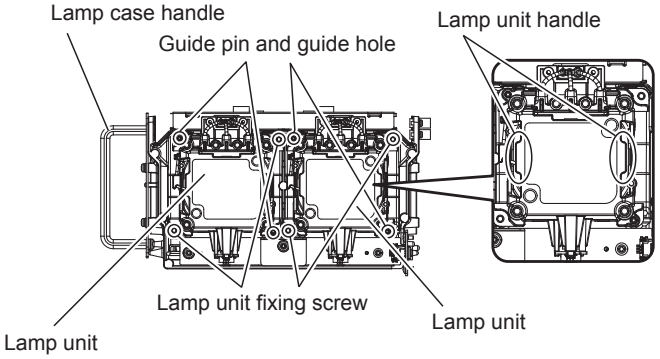

Fig. 4

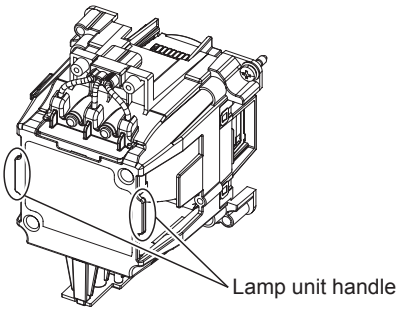

Fig. 5

1) **Set the <MAIN POWER> switch to <OFF> and disconnect the power plug from the power outlet.**
   - Wait at least one hour and check if the lamp unit has cooled down.

2) **Remove the lamp unit cover. (Fig. 1)**

i) Use a Phillips screwdriver to turn the lamp unit cover fixing screw (x1) counterclockwise until it turns freely, and open the lamp unit cover slowly in the direction of the arrow.
   - Opening the lamp unit cover quickly may result in damage to the cover.

- If you loosen the lamp unit cover fixing screw with the projector installed upward in the vertical direction, the lamp unit cover may open on its weight and may drop off. Support the lamp unit cover with your hand when you loosen the lamp unit cover fixing screw.

ii) Hold the lamp unit cover securely and slide it in the direction of the arrow, and then remove it by pulling it out backwards.

- Since the fan and other components are attached to the lamp unit cover, handle the removed lamp unit cover with care.

3) Pull out the lamp case.

i) Use a Phillips screwdriver to turn the lamp case fixing screws (x2 each) on the side where the lamp unit to be replaced has been attached counterclockwise until they turn freely. (Fig. 2)

- Do not remove the black screws other than the lamp case fixing screws.
- If you loosen the lamp case fixing screws with the projector installed upward in the vertical direction, the lamp case may drop off on its weight. Take extra care by holding the lamp case handle when loosening the lamp case fixing screws.

ii) Hold the handle of the lamp case on the side where the lamp unit to be replaced has been attached and pull out the lamp case backwards. (Fig. 3)

- When pulling out the lamp case, make sure that the projector is stable, and perform the replacement in a safe place even if you drop it accidentally.

4) Remove the lamp unit. (Fig. 4, Fig. 5)

i) Use a Phillips screwdriver to turn the lamp unit fixing screws (x2) counterclockwise until they turn freely, and then remove the lamp unit from the lamp case.

- Hold the handles of the lamp unit and remove it straight.
- Do not remove screws other than the lamp unit fixing screws.

Attaching the lamp unit

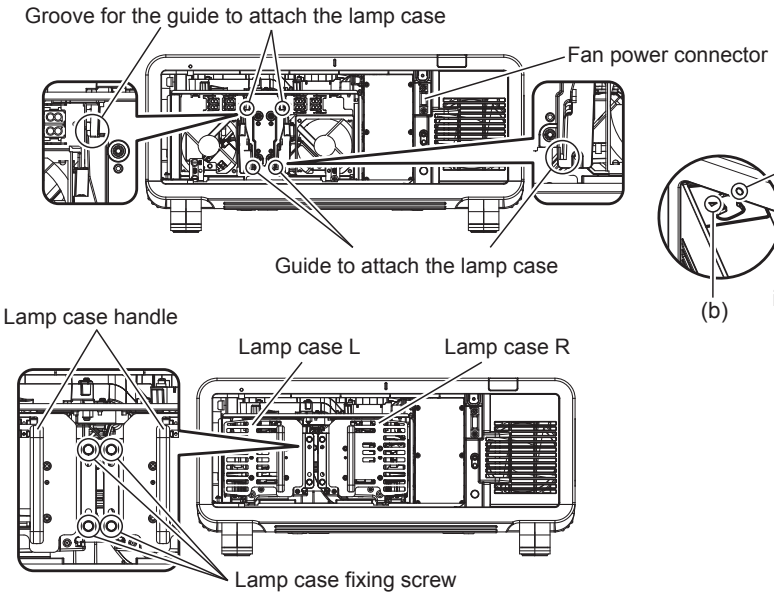

Fig. 1

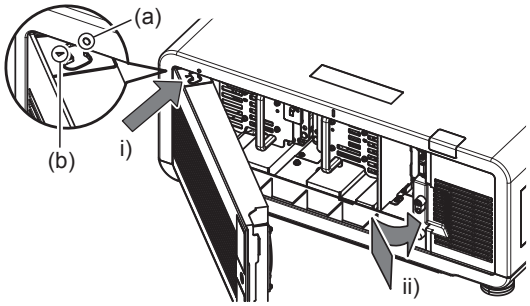

Fig. 2

1) Attach the lamp unit.

- Slowly insert a new lamp unit into the lamp case. Attach the lamp unit so that the guide pins fit into the guide holes of the lamp unit.
- If you are having difficulty attaching the lamp unit, remove it first and then push it in again slowly. Pushing it in quickly or forcibly may break the connector.

2) Use a Phillips screwdriver to firmly tighten the lamp unit fixing screws (x2 each).

- Make sure to attach the lamp unit securely.

3) Attach the lamp case. (Fig. 1)

- Slowly insert the lamp case into the projector along the grooves for the guide to attach the lamp case, then firmly tighten the lamp case fixing screws (x2).
- If the projector is installed upward in the vertical direction, the lamp case may drop off on its weight when fixing it. Take extra care by holding the lamp case handle when tightening the lamp case fixing screws.
- If you are having difficulty attaching the lamp case, remove it first and then push it in again slowly. Pushing it in quickly or forcibly may break the connector.
- Make sure to attach the lamp case securely.

4) Attach the lamp unit cover. (Fig. 2)

i) Align the mark (a) with the mark (b) (○ and △) and attach the lamp unit cover as shown by the arrow.

ii) Slide the lamp unit cover as shown by the arrow to fit it in the projector.

- Attach the lamp unit cover so that the connector on the lamp unit cover is inserted to the fan power connector securely.

iii) Use a Phillips screwdriver to firmly tighten the lamp unit cover fixing screw (x1).

- Make sure to attach the lamp unit cover securely.

Air filter unit

If dirt does not come off even after the unit is maintained, it is time for the unit to be replaced.
The Replacement filter unit (Model No.: ET-EMF510) is an optional accessory. To purchase the product, consult your dealer.

Replacing the air filter unit

Attention

- Make sure to turn off the power before replacing the air filter unit.
- When attaching the unit, make sure that the projector is stable, and perform the replacement in a safe place even if you drop it accidentally.

1) Remove the air filter unit.

- Refer to “Removing the air filter unit” (➡ page 181).

2) Attach the optional Replacement filter unit (Model No.: ET-EMF510) to the projector.

- The air filter unit has no difference between top and bottom, but is two-sided. Match the protrusion position of the air filter unit with the grooves on the projector body.
- Refer to “Attaching the air filter unit” (➡ page 182).

Attention

- When switching on the projector, make sure that the air filter unit is attached. If it is not properly attached, the projector will suck in dirt and dust causing a malfunction.
- If you use the projector without attaching the air filter unit, the filter indicator <FILTER> blinks in red and the message appears on the projected image for approximately 30 seconds.

Note

- The replacement cycle of the air filter unit varies greatly depending on the usage environment.

Troubleshooting

Review the following points. For details, see the corresponding pages.

Problems	Points to be checked	Page
Power does not turn on.	• Is the power plug firmly inserted into the outlet?	—
	• Is the <MAIN POWER> switch set to <OFF>?	64
	• Is the wall outlet supplying electricity?	—
	• Have the circuit breakers tripped?	—
	• Are the lamp indicators <LAMP1>/<LAMP2>/<LAMP3>/<LAMP4> or the temperature indicator <TEMP> lit or blinking?	179
	• Is the lamp unit and the lamp unit cover attached securely?	184
	• Is the power supply voltage proper (AC 200 V - 240 V)?	215
No image appears.	• Are connections to external devices correctly performed?	52
	• Is the input selection setting correct?	71
	• Is the [BRIGHTNESS] adjustment setting at a minimum?	84
	• Is the external device that is connected to the projector working properly?	—
	• Is the shutter function in use?	72
	• If the power indicator <ON (G)/STANDBY (R)> is blinking in red, consult your dealer.	—
	• Is the lens cover still attached to the lens?	59
Image is fuzzy.	• Is the lens focus set correctly?	65
	• Is the projection distance appropriate?	34
	• Is the lens dirty?	22
	• Is the projector installed perpendicular to the screen?	—
Color is pale or grayish.	• Are [COLOR] and [TINT] adjusted correctly?	84
	• Is the external device connected to the projector adjusted correctly?	52
	• Is the RGB cable damaged?	—
Remote control does not respond.	• Are the batteries depleted?	—
	• Is the polarity of the batteries set correctly?	30
	• Are there any obstructions between the remote control and the remote control signal receiver of the projector?	25
	• Is the remote control being used beyond its effective operation range?	26
	• Are other forms of light, such as fluorescent light, affecting the projection?	26
	• Is the [REMOTE CONTROL] setting in [CONTROL DEVICE SETUP] set to [DISABLE]?	151
	• Is the <REMOTE 2 IN> terminal used for contact control?	206
	• Is the ID number setting operation correct?	75
Menu screen does not appear.	• Is the on-screen display function turned off (hidden)?	119
Buttons on the control panel do not operate.	• Is the [CONTROL PANEL] setting in [CONTROL DEVICE SETUP] set to [DISABLE]?	151
	• Is the <REMOTE 2 IN> terminal used for contact control?	206
Image does not display correctly.	• Is the [SYSTEM SELECTOR] selection set correctly?	89
	• Is the [RGB1 INPUT SETTING] setting made correctly?	113
	• Is there a problem with the video tape or other image sources?	—
	• Is a signal which is not compatible with the projector being input?	209
Image from a computer does not appear.	• Is the cable too long? (For D-Sub cables, the cable length should be 10 m (32'10") or shorter.)	—
	• Is the external video output on the laptop computer set correctly? (Ex.: The external output settings may be switched by pressing the “Fn” + “F3” or “Fn” + “F10” simultaneously. Since the method varies depending on the computer type, refer to the user manual provided with your computer.)	—
Image output from DVI-D of the computer does not appear.	• Is the [EDID SELECT] setting in [DVI-D IN] set to [EDID3] or [EDID2:PC]?	114
	• The graphics accelerator driver of the computer may need to be updated to the latest version.	—
	• The condition may be improved by making the [EDID SELECT] setting in [DVI-D IN] and then restarting the computer.	114
Video from HDMI compatible device does not appear or it appears jumbled.	• Is the HDMI cable connected securely?	52
	• Turn the power of the projector and the external device off and on.	—
	• Is a signal which is not compatible with the projector being input?	209

Problems	Points to be checked	Page
Lens shift cannot be adjusted.	• Perform [LENS CALIBRATION]. • Is the fixed-focus lens (Model No.: ET-D75LE50) attached?	140 —
Cannot control the projector with Art-Net.	• Are the connections between the twisted-pair-cable transmitter and an external device, and between the twisted-pair-cable transmitter and projector correctly done? • Is [Art-Net SETUP] set to other than [OFF]? • Are [NET], [SUB NET], [UNIVERSE], and [START ADDRESS] set correctly?	— 157 157
The DIGITAL LINK input image is not displayed.	• Are the connections between the twisted-pair-cable transmitter and the projector or an external device correctly done? • Is [DIGITAL LINK MODE] set to [AUTO] or [DIGITAL LINK]? Is it set to [ETHERNET]? • Is a signal which is not compatible with a twisted-pair-cable transmitter being input?	— 154 —
3D function is not working.	• Is the [3D INPUT FORMAT] setting of [3D SETTINGS] correct? • Check the 3D eyewear settings. • Is a signal which is supported by the projector being input?	104 — 212
Left and right images are reversed (not showing properly).	• Is it synchronized? Check the 3D eyewear settings. • Change the [LEFT/RIGHT SWAP] setting of [3D SETTINGS].	— 104
Image in the 3D eyewear flickers.	• Are you within the reception range?	—
3D eyewear is not functioning.	• Is the battery for 3D eyewear dead? Charge the battery for the rechargeable 3D eyewear. Change the battery for the battery type. • Is the [3D SETTINGS] setting correct?	— 103

Attention

- If problems persist even after checking the preceding points, consult your dealer.

Self-diagnosis display

There is a self-diagnosis display on the side of the projector. Self-diagnosis display will automatically display the value of the input supply voltage, or details of errors or warnings when they occur. (➡ page 28)
The following list shows the alphanumeric symbol that is displayed when an error or a warning has occurred and its details. The input supply voltage is displayed only with the numeric value.

Error/warning display	Details	Measure
U04	Air filter clogging	• Clean the air filter unit.
U11	Intake temperature warning	• The operating environment temperature is too high. Use the projector in an appropriate operating environment temperature*1.
U12	Optical module temperature warning	
U13	Exhaust air temperature warning	• The operating environment temperature is too high, or the air exhaust port may be blocked. Use the projector in an appropriate operating environment temperature*1. Or remove any objects that are blocking the air exhaust port.
U14	Low temperature warning	• The operating environment temperature is too low. Use the projector in an appropriate operating environment temperature*1.
U21	Intake temperature error	• The operating environment temperature is too high. Use the projector in an appropriate operating environment temperature*1.
U22	Optical module temperature error	
U23	Exhaust air temperature error	• The operating environment temperature is too high, or the air exhaust port may be blocked. Use the projector in an appropriate operating environment temperature*1. Or remove any objects that are blocking the air exhaust port.
U24	Low temperature error	• The operating environment temperature is too low. Use the projector in an appropriate operating environment temperature*1.
U30	Installation angle error	• Use the projector at an angle not exceeding ±15° from the horizontal plane.
U31	Portrait installation angle error	• Install the projector with the connecting terminals down.
U32	Used lamp unit error	• To install in portrait, use the Replacement lamp unit (for portrait mode).
U33	Used lamp unit mix-up error	• A different type of lamp unit is attached. Check the model number displayed on the lamp unit and use a lamp unit with the same model number.
U35*2	Non-compatible lamp warning	• The lamp unit for portrait mode is attached. Replace the lamp unit with one compatible with the projector.
U41	Lamp 1 runtime warning	• It will reach the lamp replacement time. Replace the lamp unit.
U42	Lamp 2 runtime warning	
U43	Lamp 3 runtime warning	
U44	Lamp 4 runtime warning	
U51	Lamp 1 error	• Failed to light the lamp. Turn on the power again after the lamp is cooled. If the lamp still does not light, consult your dealer.
U52	Lamp 2 error	
U53	Lamp 3 error	
U54	Lamp 4 error	
U61	Lamp 1 runtime has exceeded 3 000 hours*3	• It has reached the lamp replacement time. Replace the lamp unit.
U62	Lamp 2 runtime has exceeded 3 000 hours*3	
U63	Lamp 3 runtime has exceeded 3 000 hours*3	
U64	Lamp 4 runtime has exceeded 3 000 hours*3	
U71	Lamp 1 not installed	• Attach the lamp unit.
U72	Lamp 2 not installed	
U73	Lamp 3 not installed	
U74	Lamp 4 not installed	
U76	Air filter unit not installed	• Attach the air filter unit.
U78	Clog sensor error	• Clean or replace the air filter unit. (➡ page 181)
U81	Low AC voltage warning (below 170 V)	• The input supply voltage is low. Use electric wiring that can sufficiently withstand the power consumption of the projector.

Error/warning display	Details	Measure
UA1	FPGA temperature warning	• The operating environment temperature is too high. Use the projector in an appropriate operating environment temperature*1.
UA4	Power supply temperature error	
UA5	FPGA temperature error	
H01	Battery replacement for the internal clock	• Battery replacement is required. Consult your dealer.
H11	Intake temperature sensor not present	• If the display does not clear after switching the main power off and on, consult your dealer.
H12	Optical module temperature sensor not present	
H13	Exhaust air temperature sensor not present	
H18	Clog sensor not present	
F00	Liquid cooling pump R warning	• If the display does not clear after switching the main power off and on, consult your dealer.
F01	Liquid cooling pump G warning	
F02	Liquid cooling pump B warning	
F11	Shutter error	
F12	Dynamic iris error	
F13	Air filter unit error	
F15	Luminance sensor error	
F16	Angle sensor error	
F41	Lamp 1 memory error	• The lamp unit is broken. Consult your dealer.
F42	Lamp 2 memory error	
F43	Lamp 3 memory error	
F44	Lamp 4 memory error	
F50	Exhaust fan 1 warning	• If the display does not clear after switching the main power off and on, consult your dealer.
F51	Exhaust fan 2 warning	
F52	Exhaust fan 3 warning	
F53	Exhaust fan 4 warning	
F54	Intake fan 1 warning	
F55	Intake fan 2 warning	
F56	Lamp 1 fan warning	
F57	Lamp 2 fan warning	
F58	Lamp 3 fan warning	
F59	Lamp 4 fan warning	
F61	Lamp 1 power supply communication error	
F62	Lamp 2 power supply communication error	
F63	Lamp 3 power supply communication error	
F64	Lamp 4 power supply communication error	
F70	Lamp 1 power supply fan warning	
F71	Lamp 2 power supply fan warning	
F72	Power supply fan warning	
F73	Signal fan warning	
F74	Lamp 1/2 relay fan warning	
F75	Lamp 3/4 relay fan warning	
F76	Color prism fan 1 warning	
F77	Color prism fan 2 warning	
F78	Color prism fan 3 warning	
F79	Color prism fan 4 warning	

Error/warning display	Details	Measure
F91	FPGA1/2 configuration error	● If the display does not clear after switching the main power off and on, consult your dealer.
F92	FPGA3 configuration error	
F96	Lens mounter error	
FE0	Color prism fan 4 error	
FE1	Exhaust fan 1 error	
FE2	Exhaust fan 2 error	
FE3	Exhaust fan 3 error	
FE4	Exhaust fan 4 error	
FE5	Intake fan 1 error	
FE6	Intake fan 2 error	
FE7	Lamp 1 fan error	
FE8	Lamp 2 fan error	
FE9	Lamp 3 fan error	
FF0	Lamp 4 fan error	
FF1	Lamp 1/2 power supply fan error	
FF2	Lamp 3/4 power supply fan error	
FF3	Power supply fan error	
FF4	Signal fan error	
FF5	Lamp 1/2 relay fan error	
FF6	Lamp 3/4 relay fan error	
FF7	Color prism fan 1 error	
FF8	Color prism fan 2 error	
FF9	Color prism fan 3 error	
FJ0	Liquid cooling pump R error	
FJ1	Liquid cooling pump G error	
FJ2	Liquid cooling pump B error	

*1 Refer to “Operating environment temperature” (➡ page 216) for the operating environment temperature of the projector.
*2 Only for PT-DZ16K2
*3 800 hours when using the optional Replacement lamp unit (for portrait mode) (Model No.: ET-LAD520P (1 pc), ET-LAD520PF (4 pcs)).

Note

- The self-diagnosis display and the details of the malfunction may vary.
- For errors and warnings that are not described in the table, consult your dealer.

Chapter 6 Appendix

This chapter describes specifications and after-sales service for the projector.

Technical information

PJLink protocol

The network function of this projector supports the PJLink class 1, and the PJLink protocol can be used to perform projector setting and projector status query operations from a computer.

Control commands

The following table lists the PJLink protocol commands that can be used to control the projector.

- x characters in tables are non-specific characters.

Command	Control details	Parameter/response string	Remark
POWR	Power supply control	0 1	Standby Power on
POWR?	Power supply status query	0 1 2 3	Standby Power on Preparing for switching off the projector Warm-up
INPT	Input selection	11 12	RGB1 RGB2
INPT?	Input selection query	31 32 33 34 35	DVI-D HDMI DIGITAL LINK SDI1 (Only for PT-DZ21K2, PT-DS20K2, PT-DZ16K2) SDI2 (Only for PT-DZ21K2, PT-DS20K2)
AVMT	Shutter control	30	Shutter function disabled (shutter: open)
AVMT?	Shutter status query	31	Shutter function enabled (shutter: closed)
ERST?	Error status query	xxxxxx	1st byte: Indicates fan errors, and returns 0 - 2. 2nd byte: Indicates lamp errors, and returns 0 - 2. 3rd byte: Indicates temperature errors, and returns 0 - 2. 4th byte: Indicates cover open errors, and returns 0 - 2. 5th byte: Indicates filter errors, and returns 0 - 2. 6th byte: Indicates other errors, and returns 0 - 2. • 0 = No error is detected • 1 = Warning • 2 = Error
LAMP?	Lamp status query	xxxxxxxxxxxxxxxxxxxxxxxxx	1st number (1 - 5 digits): Lamp 1 runtime 2nd number: 0 = Lamp 1 off, 1 = Lamp 1 on 3rd number (1 - 5 digits): Lamp 2 runtime 4th number: 0 = Lamp 2 off, 1 = Lamp 2 on 5th number (1 - 5 digits): Lamp 3 runtime 6th number: 0 = Lamp 3 off, 1 = Lamp 3 on 7th number (1 - 5 digits): Lamp 4 runtime 8th number: 0 = Lamp 4 off, 1 = Lamp 4 on
INST?	Input selection list query	11 12 31 32 33 34 35	Only for PT-DZ21K2, PT-DS20K2
		11 12 31 32 33	Only for PT-DW17K2
		11 12 31 32 33 34	Only for PT-DZ16K2
NAME?	Projector name query	xxxxx	Returns the name set in [PROJECTOR NAME] of [NETWORK SETUP].
INF1?	Manufacturer name query	Panasonic	Returns manufacturer name.
INF2?	Model name query	DZ21K2 DS20K2 DW17K2 DZ16K2	Returns model name.
INF0?	Other information queries	xxxxx	Returns information such as version number.
CLSS?	Class information query	1	Returns class for PJLink.

PJLink security authentication

The password used for PJLink is the same as that of the password set for web control.
When using the projector without security authentication, do not set a password for web control.

- For specifications related to PJLink, visit the website of Japan Business Machine and Information System Industries Association.
  URL http://pjlink.jbmia.or.jp/english/

Using Art-Net function

Since the network function of the projector supports the Art-Net function, you can control the projector settings with the DMX controller and application software using the Art-Net protocol.

Channel definition

The following table lists the channel definitions used for controlling the projector with the Art-Net function.
Channel settings can be switched using the [NETWORK] menu → [Art-Net CHANNEL SETTING] (➡ page 157).
The control details assigned to each channel are listed in the following table.

- Channel assignment for [USER] is in factory default setting. Assignment can be changed.

Channel	Control details		
	[2]	[USER]	[1]
CHANNEL1	LIGHT OUTPUT	LIGHT OUTPUT	SHUTTER
CHANNEL2	INPUT SELECT	INPUT SELECT	INPUT SELECT
CHANNEL3	LENS POSITION	LENS POSITION	LENS FUNCTION SELECT
CHANNEL4	LENS H SHIFT	LENS H SHIFT	LENS CONTROL
CHANNEL5	LENS V SHIFT	LENS V SHIFT	POWER
CHANNEL6	LENS FOCUS	LENS FOCUS	LIGHT OUTPUT
CHANNEL7	LENS ZOOM	LENS ZOOM	ENABLE/DISABLE
CHANNEL8	POWER	POWER	FADE-IN
CHANNEL9	GEOMETRY	GEOMETRY	FADE-OUT
CHANNEL10	CUSTOM MASKING*1	CUSTOM MASKING*1	CUSTOM MASKING*1
CHANNEL11	ENABLE/DISABLE	ENABLE/DISABLE	GEOMETRY
CHANNEL12	NONE	NONE	NONE

*1 For PT-DZ21K2 and PT-DS20K2. “NONE” for PT-DW17K2 and PT-DZ16K2.

■ Control details

Control details	Performance	Parameter	Default value	Remark
LIGHT OUTPUT	100 %	0	0	Can be set in 256 steps between 100 % and 0 %.
	…	…		
	0 %	255		
INPUT SELECT (when [1] is selected)	No operation	0-7	0	—
	RGB1	8-15		
	RGB2	16-23		
	No operation	24-31		
	DVI-D	32-39		
	HDMI	40-47		
	SDI1 (Only for PT-DZ21K2, PT-DS20K2, PT-DZ16K2)	48-55		
	SDI2 (Only for PT-DZ21K2, PT-DS20K2)	56-63		
	No operation	64-127		
	P IN P execution, USER1	128-135		
	P IN P execution, USER2	136-143		
	P IN P execution, USER3	144-151		
	No operation	152-255		

Control details	Performance		Parameter	Default value	Remark
INPUT SELECT (when [2] or [USER] is selected)	No operation		0-7	0	—
	RGB1		8-15		
	RGB2		16-23		
	DVI-D		24-31		
	HDMI		32-39		
	DIGITAL LINK		40-47		
	SDI1 (Only for PT-DZ21K2, PT-DS20K2, PT-DZ16K2)		48-55		
	SDI2 (Only for PT-DZ21K2, PT-DS20K2)		56-63		
	No operation		64-119		
	P IN P OFF		120-127		
	P IN P execution, USER1		128-135		
	P IN P execution, USER2		136-143		
	P IN P execution, USER3		144-151		
	No operation		152-255		
LENS POSITION	No operation		0-31	0	“Move to the home position” is an operation when [NORMAL] is selected in [HOME POSITION] of the **[HOME POSITION]** screen. “Move to the ET-D75LE90 lens standard position” is an operation when [D75LE90] is selected in [HOME POSITION] of the **[HOME POSITION]** screen.
	Move to the home position		32-63		
	Move to the ET-D75LE90 lens standard position				
	Load LENS MEMORY 1		64-79		
	Load LENS MEMORY 2		80-95		
	Load LENS MEMORY 3		96-111		
	Load LENS MEMORY 4		112-127		
	Load LENS MEMORY 5		128-143		
	Load LENS MEMORY 6		144-159		
	Load LENS MEMORY 7		160-175		
	Load LENS MEMORY 8		176-191		
	Load LENS MEMORY 9		192-207		
	Load LENS MEMORY 10		208-223		
	No operation		224-255		
LENS H SHIFT LENS V SHIFT LENS FOCUS LENS ZOOM	Lens adjustment	(–) High speed	0-31	128	—
		(–) Low speed	32-63		
		(–) Fine adjustment	64-95		
	Operation stop		96-159		
	Lens adjustment	(+) Fine adjustment	160-191		
		(+) Low speed	192-223		
		(+) High speed	224-255		
LENS FUNCTION SELECT (when [1] is selected)	No operation		0-15	0	Operate together with LENS CONTROL. “Move to the home position” is an operation when [NORMAL] is selected in [HOME POSITION] of the **[HOME POSITION]** screen. “Move to the ET-D75LE90 lens standard position” is an operation when [D75LE90] is selected in [HOME POSITION] of the **[HOME POSITION]** screen.
	LENS H SHIFT		16-31		
	LENS V SHIFT		32-47		
	LENS FOCUS		48-63		
	LENS ZOOM		64-79		
	Move to the home position		80-95		
	Move to the ET-D75LE90 lens standard position				
	No operation		96-255		
LENS CONTROL (when [1] is selected)	Lens adjustment	(–) High speed	0-31	100	Operate together with LENS FUNCTION SELECT.
		(–) Low speed	32-63		
		(–) Fine adjustment	64-95		
	Operation stop		96-127		
	Lens adjustment	(+) Fine adjustment	128-159		
		(+) Low speed	160-191		
		(+) High speed	192-223		
	Execute command action		224-255		

Control details	Performance	Parameter	Default value	Remark
POWER	Standby	0-63	128	—
	No operation	64-191		
	Power on	192-255		
SHUTTER	SHUTTER: Open	0-63	128	—
	No operation	64-191		
	SHUTTER: Close	192-255		
FADE-IN FADE-OUT (when [1] is selected)	0.0s	0-15	255	Operate together with CHANNEL1.
	0.5s	16-31		
	1.0s	32-47		
	1.5s	48-63		
	2.0s	64-79		
	2.5s	80-95		
	3.0s	96-111		
	3.5s	112-127		
	4.0s	128-143		
	5.0s	144-159		
	7.0s	160-175		
	10.0s	176-191		
	No operation	192-255		—
GEOMETRY	OFF	0-15	255	—
	KEYSTONE	16-31		
	CURVED	32-47		
	PC-1 (Only for PT-DZ21K2, PT-DS20K2)	48-63		
	PC-2 (Only for PT-DZ21K2, PT-DS20K2)	64-79		
	PC-3 (Only for PT-DZ21K2, PT-DS20K2)	80-95		
	CORNER CORRECTION	96-111		
	No operation	112-255		
CUSTOM MASKING	OFF	0-31	255	(Only for PT-DZ21K2, PT-DS20K2) To use PC-1, PC-2, and PC-3, the optional Upgrade Kit (Model No.: ET-UK20) is required.
	PC-1	32-63		
	PC-2	64-95		
	PC-3	96-127		
	No operation	128-255		
FREEZE	No operation	0-31	128	—
	OFF	32-95		
	No operation	96-159		
	ON	160-223		
	No operation	224-255		
COLOR TINT	No operation	0-31	0	—
	Factory default setting	32-63		
	–31	64-65		
	…	…		
	0	128-129		
	…	…		
	+31	190-191		
	No operation	192-255		

Control details	Performance	Parameter	Default value	Remark
RASTER PATTERN	No operation	0-15	0	—
	OFF	16-31		
	WHITE	32-47		
	YELLOW	48-63		
	CYAN	64-79		
	GREEN	80-95		
	MAGENTA	96-111		
	RED	112-127		
	BLUE	128-143		
	BLACK	144-159		
	USER LOGO	160-175		
	No operation	176-255		
ENABLE/DISABLE	Disable	0-127	0	When “Disable” is set, operations of all channels become unacceptable.
	Enable	128-255		

Note

- If the projector is operated with the remote control or on the control panel, or by the control command while controlling the projector using the Art-Net function, the setting of the DMX controller or computer application may be different from the projector status. To reflect the controls of all channels to the projector, set “ENABLE/DISABLE” of channel 11 to “Disable” and then set back to “Enable”.
- To create/register the USER LOGO image, use “Logo Transfer Software” included in the supplied CD-ROM.

Control commands via LAN

When web control administrator rights password is set (Protect mode)

Connecting

1) Obtain the IP address and port number (Initial set value = 1024) of the projector and request a connection to the projector.

- You can obtain both the IP address and the port number from the menu screen of the projector.

IP address	Obtain from the [NETWORK] menu → [NETWORK STATUS].
Port number	Obtain from the [NETWORK] menu → [NETWORK CONTROL] → [COMMAND PORT].

2) Check the response from the projector.

	Data section	Blank	Mode	Blank	Random number section	Termination symbol
Command example	“NTCONTROL” (ASCII string)	‘ ’ 0x20	‘1’ 0x31	‘ ’ 0x20	“zzzzzzzz” (ASCII code hex number)	(CR) 0x0d
Data length	9 bytes	1 byte	1 byte	1 byte	8 bytes	1 byte

- Mode: 1 = Protect mode
- Example: Response during protect mode (random number section is undefined value)
  “NTCONTROL 1 23181e1e” (CR)

3) Generate a 32-byte hash value from the following data using MD5 algorithm.

- “xxxxxx:yyyyy:zzzzzzzz”

xxxxxx	Administrator rights user name for the web control (default user name is “admin1”)
yyyyy	Password of above administrator rights user (default password is “panasonic”)
zzzzzzzz	8-byte random number obtained in Step **2)**

Command transmission method

Transmit using the following command formats.

■ Transmitted data

	Header			Data section	Termination symbol
Command example	Hash value (Refer to “Connecting” above)	‘0’ 0x30	‘0’ 0x30	Control command (ASCII string)	(CR) 0x0d
Data length	32 bytes	1 byte	1 byte	Undefined length	1 byte

- Example: Transmission of power supply status acquisition command (hash value is calculated from default user name, password, and acquired random number)
  “dbdd2dabd3d4d68c5dd970ec0c29fa6400QPW” (CR)

■ Received data

	Header		Data section	Termination symbol
Command example	‘0’ 0x30	‘0’ 0x30	Control command (ASCII string)	(CR) 0x0d
Data length	1 byte	1 byte	Undefined length	1 byte

- Example: The projector is powered on
  “00001” (CR)

■ Error response

	String	Details	Termination symbol
Message	“ERR1”	Undefined control command	(CR) 0x0d
	“ERR2”	Out of parameter range	
	“ERR3”	Busy state or no-acceptable period	
	“ERR4”	Timeout or no-acceptable period	
	“ERR5”	Wrong data length	
	“ERRA”	Password mismatch	
Data length	4 bytes	—	1 byte

When web control administrator rights password is not set (Non-protect mode)

Connecting

1) Obtain the IP address and port number (Initial set value = 1024) of the projector and request a connection to the projector.

- You can obtain both the IP address and the port number from the menu screen of the projector.

IP address	Obtain from the [NETWORK] menu → [NETWORK STATUS].
Port number	Obtain from the [NETWORK] menu → [NETWORK CONTROL] → [COMMAND PORT].

2) Check the response from the projector.

	Data section	Blank	Mode	Termination symbol
Command example	“NTCONTROL” (ASCII string)	‘ ’ 0x20	‘0’ 0x30	(CR) 0x0d
Data length	9 bytes	1 byte	1 byte	1 byte

- Mode: 0 = Non-protect mode
- Example: Response during non-protect mode
  “NTCONTROL 0” (CR)

Command transmission method

Transmit using the following command formats.

■ Transmitted data

	Header		Data section	Termination symbol
Command example	‘0’ 0x30	‘0’ 0x30	Control command (ASCII string)	(CR) 0x0d
Data length	1 byte	1 byte	Undefined length	1 byte

- Example: Transmission of power supply status acquisition command
  “00QPW” (CR)

■ Received data

	Header		Data section	Termination symbol
Command example	‘0’ 0x30	‘0’ 0x30	Control command (ASCII string)	(CR) 0x0d
Data length	1 byte	1 byte	Undefined length	1 byte

- Example: The power of the projector is in standby status
  “00000” (CR)

■ Error response

	String	Details	Termination symbol
Message	“ERR1”	Undefined control command	(CR) 0x0d
	“ERR2”	Out of parameter range	
	“ERR3”	Busy state or no-acceptable period	
	“ERR4”	Timeout or no-acceptable period	
	“ERR5”	Wrong data length	
	“ERRA”	Password mismatch	
Data length	4 bytes	—	1 byte

<SERIAL IN>/<SERIAL OUT> terminal

The <SERIAL IN>/<SERIAL OUT> terminal of the projector conforms with RS-232C so that the projector can be connected to and controlled from a computer.

Connection

Single projector

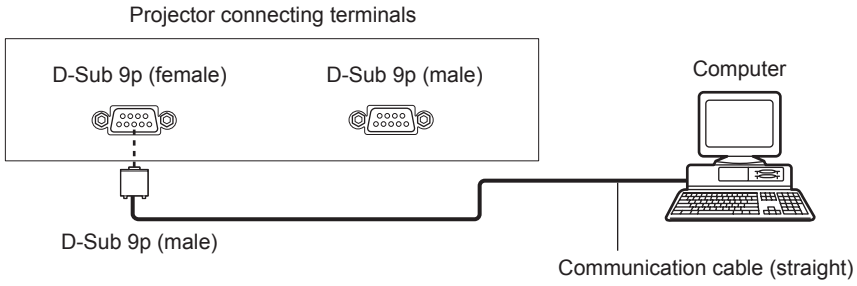

Multiple projectors

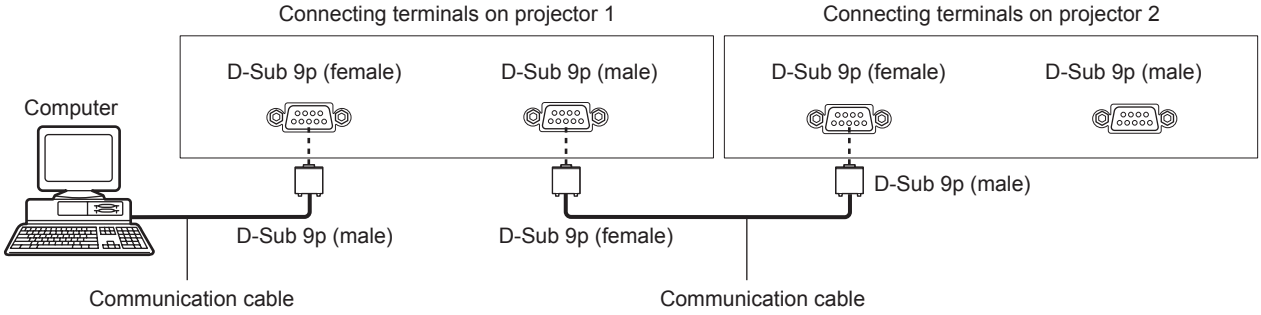

When connecting using DIGITAL LINK compatible device

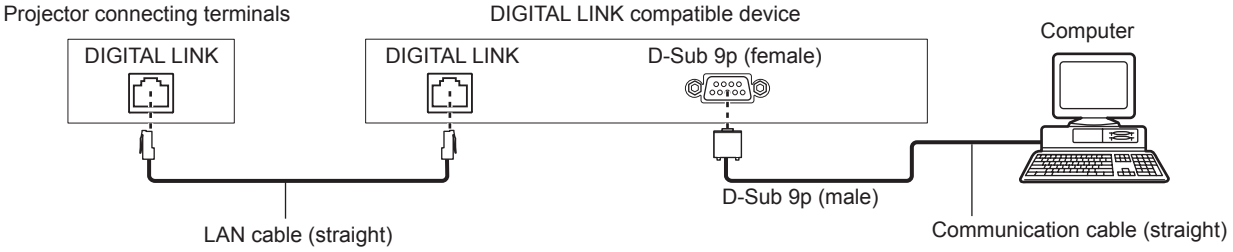

Note

- The destination of [RS-232C] (➡ page 135) must be set according to the connection method.
- When connecting using a DIGITAL LINK compatible device, set the [PROJECTOR SETUP] menu → [STANDBY MODE] (➡ page 133) to [NORMAL] to control the projector during standby.
  When [STANDBY MODE] is set to [ECO], the projector cannot be control during standby.

Pin assignments and signal names

D-Sub 9-pin (female) Outside view	Pin No.	Signal name	Details
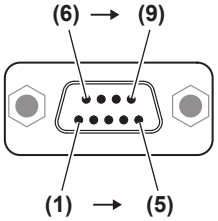	(1)	—	NC
	(2)	TXD	Transmitted data
	(3)	RXD	Received data
	(4)	—	NC
	(5)	GND	Earth
	(6)	—	NC
	(7)	CTS	Connected internally
	(8)	RTS	
	(9)	—	NC

D-Sub 9-pin (male) Outside view	Pin No.	Signal name	Details
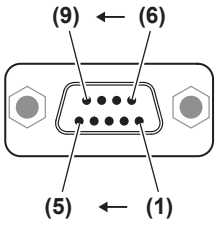	(1)	—	NC
	(2)	RXD	Received data
	(3)	TXD	Transmitted data
	(4)	—	NC
	(5)	GND	Earth
	(6)	—	NC
	(7)	RTS	Connected internally
	(8)	CTS	
	(9)	—	NC

Communication conditions (Factory default)

Signal level	RS-232C-compliant
Sync. method	Asynchronous
Baud rate	9 600 bps
Parity	None
Character length	8 bits
Stop bit	1 bit
X parameter	None
S parameter	None

Basic format

Transmission from the computer starts with STX, then the ID, command, parameter, and ETX are sent in this order. Add parameters according to the details of control.

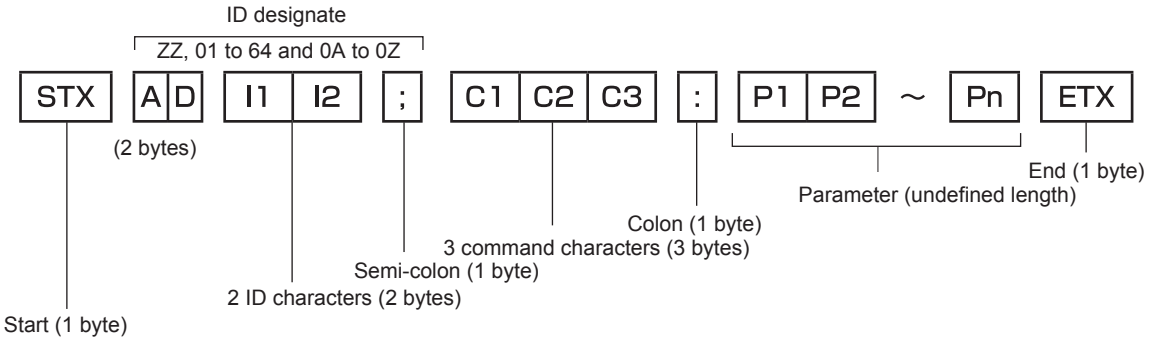

Basic format (has subcommands)

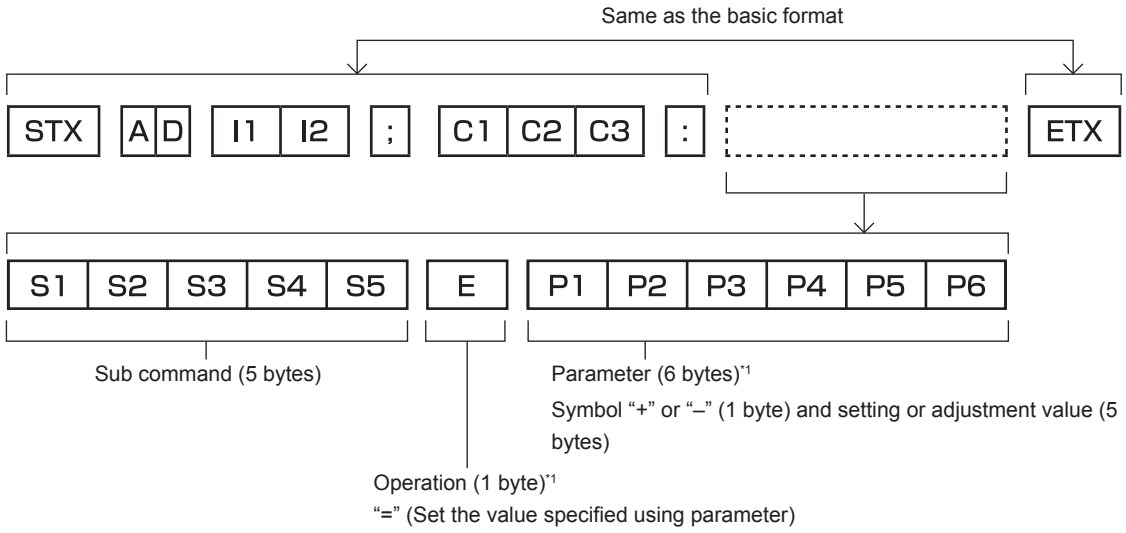

*1 When transmitting a command which does not need a parameter, an operation (E) and parameter are not necessary.

Attention

- If a command is transmitted after the lamp starts illuminating, there may be a delay in response or the command may not be executed. Try sending or receiving any command after 60 seconds.
- When transmitting multiple commands, be sure to wait until 0.5 seconds has elapsed after receiving the response from the projector before sending the next command. When transmitting a command which does not need a parameter, a colon (:) is not necessary.

Note

- If a command cannot be executed, the “ER401” response is sent from the projector to the computer.
- If an invalid parameter is sent, the “ER402” response is sent from the projector to the computer.
- ID transmission in RS-232C supports ZZ (ALL) and 01 to 64, as well as 0A to 0Z groups.
- If a command is sent with an ID designated, a response will be sent to the computer only in the following cases.
  - It matches the projector ID
  - ID is designated as ALL and [RESPONSE(ID ALL)] is set to [ON]
  - ID is designated as GROUP and [RESPONSE(ID GROUP)] is set to [ON]
- STX and ETX are character codes. STX shown in hexadecimal is 02, and ETX shown in hexadecimal is 03.

When multiple projectors are controlled

When multiple projectors are all controlled

When controlling multiple projectors together via RS-232C, perform the following settings.

1) Set a different ID for each projector.

2) Set [RESPONSE(ID ALL)] to [ON] in only one projector.

3) Set [RESPONSE(ID ALL)] to [OFF] for all other projectors set in Step 2).

When multiple projectors are all controlled by group unit

When controlling multiple projectors by group unit via RS-232C, perform the following settings.

1) Set a different ID for each projector.

2) Set [RESPONSE(ID GROUP)] to [ON] in only one projector.

3) Set [RESPONSE(ID GROUP)] to [OFF] for all other projectors set in Step 2).

Note

- There will be no response if two or more projectors have [RESPONSE(ID ALL)] set to [ON].
- There will be no response if two or more projectors of the same group have [RESPONSE(ID GROUP)] set to [ON].
- When setting multiple groups, set [RESPONSE(ID ALL)] to [ON] in only one projector in each group.

Cable specification

When connected to a computer

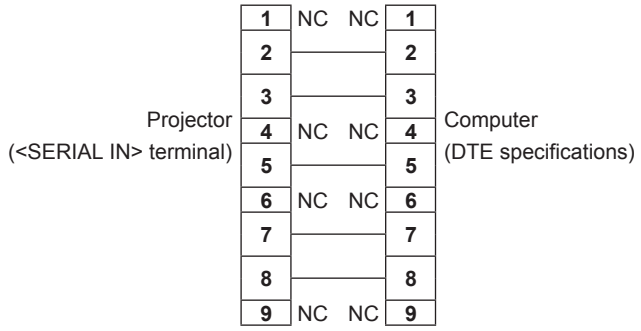

When multiple projectors are connected

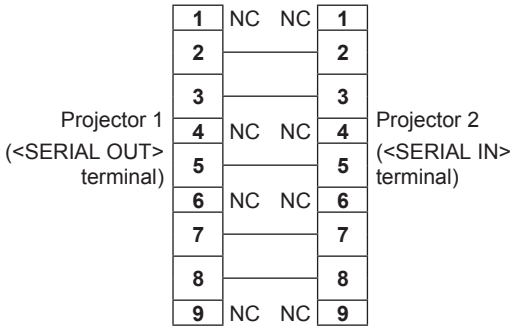

Control command

The following table lists the commands that can be used to control the projector using a computer.

■ Projector control command

Command	Details	Parameter/response string	Remark (parameter)
PON	Power on	—	To check if the power is on, use the “Power query” command.
POF	Power standby		
QPW	Power query	000 001	STANDBY Power on
IIS	Switching the input signal	RG1 RG2 DVI HD1 DL1 SD1 SD2	RGB1 RGB2 DVI-D HDMI DIGITAL LINK SDI1 (Only for PT-DZ21K2, PT-DS20K2, PT-DZ16K2) SDI2 (Only for PT-DZ21K2, PT-DS20K2)
QSL	Query for lamp selection	0 1 2 3 4 5 6 7 8 9 10 11 12 13	QUAD LAMP1/4 LAMP2/3 DUAL*1 LAMP1/2/3 LAMP1/2/4 LAMP1/3/4 LAMP2/3/4 TRIPLE*1 LAMP1 LAMP2 LAMP3 LAMP4 SINGLE*1
LPM	Lamp selection	0 1 2 3 4 5 6 7 8 9 10 11 12 13	QUAD LAMP1/4 LAMP2/3 DUAL*1 LAMP1/2/3 LAMP1/2/4 LAMP1/3/4 LAMP2/3/4 TRIPLE*1 LAMP1 LAMP2 LAMP3 LAMP4 SINGLE*1

Command	Details	Parameter/response string	Remark (parameter)
Q$L	Lamp cumulative runtime query	1 2 3 4	LAMP1 LAMP2 LAMP3 LAMP4 Response is 0000 to 3000
OSH	Shutter control	0 1	OPEN CLOSE
QSH	Shutter status query		
VSE	Aspect ratio switch	0 1 2 5 6 9 10	DEFAULT/VID AUTO 4:3 16:9 THROUGH HV FIT H FIT V FIT
QSE	Aspect ratio settings query		
OPP	P IN P execution	0 1 2 3	OFF USER1 USER2 USER3
QPP	P IN P setting query		
OCS	Sub memory switch	01 - 96	Sub memory number
QSB	Sub memory status query		

*1 Use from the lamp with shortest runtime among Lamp 1 to Lamp 4.

■ Projector control command (with sub command)

Command	Sub command	Details	Remark
VXX	RYCI1	RGB1 input setting	+00000 = RGB/YP_BP_R, +00001 = Y/C, +00002 = VIDEO

■ Lens control command

Command	Sub command	Details	Remark
VXX	LNSI2	Lens H shift	+00000 = Fine adjustment 1+, +00001 = Fine adjustment 1–, +00100 = Fine adjustment 2+, +00101 = Fine adjustment 2–, +00200 = Coarse adjustment+, +00201 = Coarse adjustment–
VXX	LNSI3	Lens V shift	
VXX	LNSI4	Lens focus	
VXX	LNSI5	Lens zoom	

<REMOTE 2 IN> terminal

It is possible to control the projector remotely (by external contact) from a control panel located away from the projector where remote control signals cannot reach.
Use the <REMOTE 2 IN> terminal on the connecting terminals of the projector to connect to the control panel.

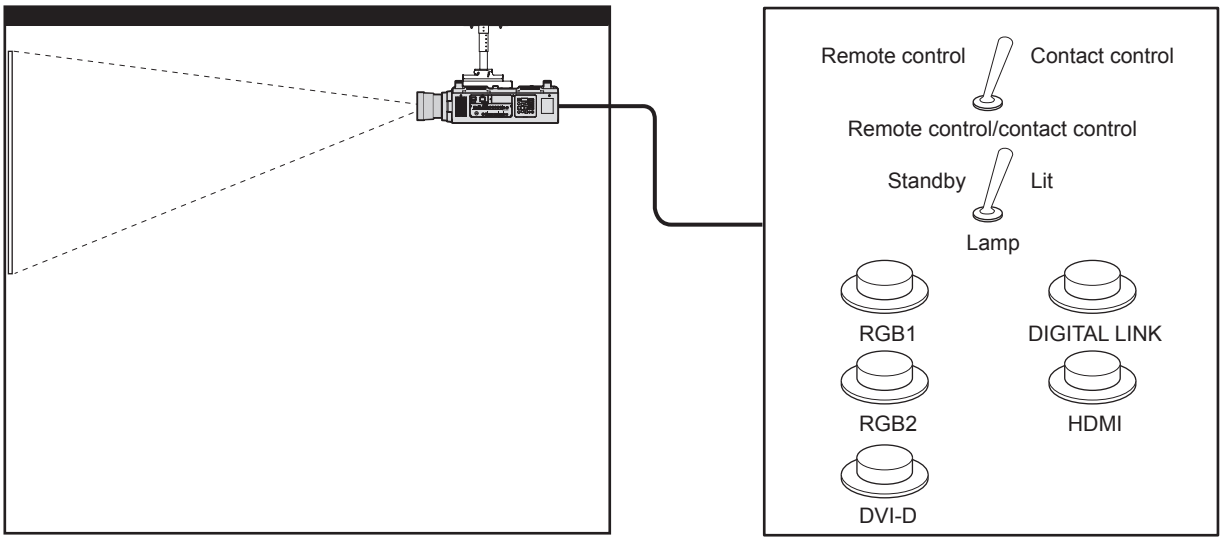

Installation locations in meeting rooms, etc. **Remote control board in another location**

Pin assignments and signal names

D-Sub 9-pin Outside view	Pin No.	Signal name	Open (H)	Short (L)
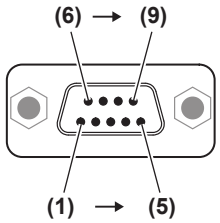	(1)	GND	—	GND
	(2)	POWER	OFF	ON
	(3)	RGB1	Other	RGB1
	(4)	RGB2	Other	RGB2
	(5)	DIGITAL LINK	Other	DIGITAL LINK
	(6)	HDMI	Other	HDMI
	(7)	DVI-D	Other	DVI-D
	(8)	SHUTTER	OFF	ON
	(9)	ENABLE / DISABLE	Controlled by remote control	Controlled by external contact

Attention

- When controlling, make sure to short-circuit pins (1) and (9).
- When pins (1) and (9) are short-circuited, the following buttons on the control panel and the remote control are disabled. Commands for RS-232C and network functions corresponding to these functions are also disabled.
  - Power on <|> button, power standby <⏻> button, <SHUTTER> button
- When pins (1) and (9) are short-circuited, and then any pins from (3) to (7) and the pin (1) are short-circuited, the following buttons on the control panel and the remote control are disabled. Commands for RS-232C and network functions corresponding to these functions are also disabled.
  - Power on <|> button, power standby <⏻> button, <RGB1> button, <RGB2> button, <DIGITAL LINK> button, <DVI-D> button, <HDMI> button, <SDI 1/2> button or <SDI> button, <INPUT MENU> button, <SHUTTER> button

Note

- For pin (2) to pin (8) settings, you can make changes if you set [REMOTE2 MODE] to [USER]. (➡ page 139)

Two-window display combination list

✓: P IN P (picture in picture) combination is possible
▲: P IN P (picture in picture) combination is possible through the same frequency
—: P IN P (picture in picture) combination is not possible

		Sub window					
		RGB1				RGB2	
Main window		Still image	Movie*1	Y/C	Video	Still image	Movie*1
RGB1 input	Still image signal	—	—	—	—	✓	✓
	Movie signal*1	—	—	—	—	✓	▲
	Y/C signal	—	—	—	—	✓	▲
	Video signal	—	—	—	—	✓	▲
RGB2 input	Still image signal	✓	✓	✓	✓	—	—
	Movie signal*1	✓	▲	▲	▲	—	—
DVI-D input	Still image signal*2	✓	✓	✓	✓	✓	✓
	Movie signal*3	✓	▲	▲	▲	✓	▲
HDMI input	Still image signal*2	✓	✓	✓	✓	✓	✓
	Movie signal*3	✓	▲	▲	▲	✓	▲
SDI1 input*4		✓	▲	▲	▲	✓	▲
SDI2 input*5		✓	▲	▲	▲	✓	▲
Dual link SDI*6		—	—	▲	▲	—	—

		Sub window						
		DVI-D		HDMI		SDI1*4	SDI2*5	Dual link SDI*6
Main window		Still image*2	Movie*3	Still image*2	Movie*3			
RGB1 input	Still image signal	✓	✓	✓	✓	✓	✓	—
	Movie signal*1	✓	▲	✓	▲	▲	▲	—
	Y/C signal	✓	▲	✓	▲	▲	▲	▲
	Video signal	✓	▲	✓	▲	▲	▲	▲
RGB2 input	Still image signal	✓	✓	✓	✓	✓	✓	—
	Movie signal*1	✓	▲	✓	▲	▲	▲	—
DVI-D input	Still image signal*2	—	—	✓	✓	✓	—	—
	Movie signal*3	—	—	✓	▲	▲	—	—
HDMI input	Still image signal*2	✓	✓	—	—	—	✓	—
	Movie signal*3	✓	▲	—	—	—	▲	—
SDI1 input*4		✓	▲	—	—	—	▲	—
SDI2 input*5		—	—	✓	▲	▲	—	—
Dual link SDI*6		—	—	—	—	—	—	—

*1 480i, 480p, 576i, 576p, 720/60p, 720/50p, 1080/60i, 1080/50i, 1080/24sF, 1080/24p, 1080/25p, 1080/30p, 1080/50p, 1080/60p
*2 640 x 480 - 1 920 x 1 200
Non-interlaced signal, dot clock frequency: 25 MHz - 162 MHz
*3 Only supports 480p, 576p, 720/60p, 720/50p, 1080/60i, 1080/50i, 1080/24sF, 1080/24p, 1080/25p, 1080/30p, 1080/50p, and 1080/60p
*4 Only for PT-DZ21K2, PT-DS20K2, PT-DZ16K2
*5 Only for PT-DZ21K2, PT-DS20K2
*6 Dual link HD-SDI, dual link 3G-SDI (Only for PT-DZ21K2, PT-DS20K2)

Note

- In the combination of ▲, if P IN P function is used with the signals of a different frequency, images in the sub window will not be displayed.
- Images in combination of DIGITAL LINK and other inputs cannot be displayed in P IN P.

Control device password

To initialize your password, consult your distributor.

Upgrade Kit

(Only for PT-DZ21K2, PT-DS20K2)
If the optional Upgrade Kit (Model No.: ET-UK20) is applied, the following functions are extended.

Function	Standard status	When the Upgrade Kit is applied
Adjustment range of [VERTICAL KEYSTONE]	Maximum of ±40°*1	Maximum of ±45°*1
Adjustment range of [HORIZONTAL KEYSTONE]	Maximum of ±15°*1	Maximum of ±40°*1
Adjustment range of [CURVED]	Vertical arc, Maximum ±50°*1 Horizontal arc, Maximum ±50°*1	Vertical arc, Maximum ±100°*1 Horizontal arc, Maximum ±100°*1
[CUSTOM MASKING]	Cannot be used.	The image is masked in optional form.
[PC CORRECTION] of [UNIFORMITY]	Cannot be used.	Correct the brightness and color unevenness of the entire screen.

*1 The adjustment range of the menu. Refer to “[GEOMETRY] projection range” (➡ page 36) for the possible projection range.

List of compatible signals

The following table specifies the video signals compatible with the projector.

- Symbols that indicate formats are as follows.
  - V: VIDEO, Y/C
  - R: RGB
  - Y: YC_BC_R/YP_BP_R
  - D: DVI-D
  - H: HDMI
  - S: SDI (Only for PT-DZ21K2, PT-DS20K2, PT-DZ16K2)

Compatible signal	Resolution (Dots)	Scanning freq.		Dot clock freq. (MHz)	Format	Plug and play*1				
		Horizontal (kHz)	Vertical (Hz)			RGB2	DVI-D			HDMI
							EDID1	EDID2	EDID3	
NTSC/NTSC4.43/ PAL-M/PAL60	720 x 480i	15.7	59.9	—	V	—	—	—	—	—
PAL/PAL-N/SECAM	720 x 576i	15.6	50.0	—	V	—	—	—	—	—
525i (480i)	720 x 480i	15.7	59.9	13.5	R/Y/S*2	—	—	—	—	—
625i (576i)	720 x 576i	15.6	50.0	13.5	R/Y/S*2	—	—	—	—	—
525i (480i)	720 (1440) x 480i*3	15.7	59.9	27.0	D/H	—	—	—	—	—
625i (576i)	720 (1440) x 576i*3	15.6	50.0	27.0	D/H	—	—	—	—	—
525p (480p)	720 x 483	31.5	59.9	27.0	R/Y/D/H	—	✓	—	✓	✓
625p (576p)	720 x 576	31.3	50.0	27.0	R/Y/D/H	—	✓	—	✓	✓
750 (720)/60p	1 280 x 720	45.0	60.0	74.3	R/Y/D/H/S*2	—	✓	—	✓	✓
750 (720)/50p	1 280 x 720	37.5	50.0	74.3	R/Y/D/H/S*2	—	✓	—	✓	✓
1125 (1080)/60i*4	1 920 x 1 080i	33.8	60.0	74.3	R/Y/D/H/S	—	✓	—	✓	✓
1125 (1080)/50i	1 920 x 1 080i	28.1	50.0	74.3	R/Y/D/H/S	—	✓	—	✓	✓
1125 (1080)/24p	1 920 x 1 080	27.0	24.0	74.3	R/Y/D/H/S	—	✓	—	✓	✓
1125 (1080)/24sF	1 920 x 1 080i	27.0	48.0	74.3	R/Y/D/H/S	—	—	—	—	—
1125 (1080)/25p	1 920 x 1 080	28.1	25.0	74.3	R/Y/D/H/S	—	✓	—	✓	—
1125 (1080)/30p	1 920 x 1 080	33.8	30.0	74.3	R/Y/D/H/S	—	—	—	—	—
1125 (1080)/60p	1 920 x 1 080	67.5	60.0	148.5	R/Y/D/H/S*5	✓*6	✓	✓*6	✓	✓
1125 (1080)/50p	1 920 x 1 080	56.3	50.0	148.5	R/Y/D/H/S*5	—	✓	—	✓	✓
2K/24p*7	2 048 x 1 080	27.0	24.0	74.3	S*8	—	—	—	—	—
2K/24sF*7	2 048 x 1 080	27.0	24.0	74.3	S*8	—	—	—	—	—
2K/48p*7	2 048 x 1 080	54.0	48.0	148.5	S*9	—	—	—	—	—
2K/50p*7	2 048 x 1 080	56.3	50.0	148.5	S*9	—	—	—	—	—
2K/60p*7	2 048 x 1 080	67.5	60.0	148.5	S*9	—	—	—	—	—
640 x 400	640 x 400	31.5	70.1	25.2	R/D/H	—	—	—	—	—
	640 x 400	37.9	85.1	31.5	R/D/H	—	—	—	—	—
640 x 480	640 x 480	31.5	59.9	25.2	R/D/H	✓	✓	✓	✓	✓
	640 x 480	35.0	66.7	30.2	R/D/H	—	—	—	—	—
	640 x 480	37.9	72.8	31.5	R/D/H	✓	—	✓	✓	✓
	640 x 480	37.5	75.0	31.5	R/D/H	✓	—	✓	✓	✓
	640 x 480	43.3	85.0	36.0	R/D/H	—	—	—	—	—
800 x 600	800 x 600	35.2	56.3	36.0	R/D/H	✓	—	✓	✓	✓
	800 x 600	37.9	60.3	40.0	R/D/H	✓	—	✓	✓	✓
	800 x 600	48.1	72.2	50.0	R/D/H	✓	—	✓	✓	✓
	800 x 600	46.9	75.0	49.5	R/D/H	✓	—	✓	✓	✓
	800 x 600	53.7	85.1	56.3	R/D/H	—	—	—	—	—
832 x 624	832 x 624	49.7	74.6	57.3	R/D/H	✓	—	✓	✓	✓

Compatible signal	Resolution (Dots)	Scanning freq.		Dot clock freq. (MHz)	Format	Plug and play*1				
		Horizontal (kHz)	Vertical (Hz)			RGB2	DVI-D			HDMI
							EDID1	EDID2	EDID3	
1024 x 768	1 024 x 768	39.6	50.0	51.9	R/D/H	—	—	—	—	—
	1 024 x 768	48.4	60.0	65.0	R/D/H	✓	—	✓	✓	✓
	1 024 x 768	56.5	70.1	75.0	R/D/H	✓	—	✓	✓	✓
	1 024 x 768	60.0	75.0	78.8	R/D/H	✓	—	✓	✓	✓
	1 024 x 768	65.5	81.6	86.0	R/D/H	—	—	—	—	—
	1 024 x 768	68.7	85.0	94.5	R/D/H	—	—	—	—	—
	1 024 x 768*10	81.4	100.0	113.3	R/D/H	—	—	—	—	—
	1 024 x 768*10	98.8	120.0	139.1	R/D/H	✓	—	✓	✓	✓
1152 x 864	1 152 x 864	53.7	60.0	81.6	R/D/H	—	—	—	—	—
	1 152 x 864	64.0	70.0	94.2	R/D/H	—	—	—	—	—
	1 152 x 864	67.5	74.9	108.0	R/D/H	—	—	—	—	—
	1 152 x 864	77.1	85.0	119.7	R/D/H	—	—	—	—	—
1152 x 870	1 152 x 870	68.7	75.1	100.0	R/D/H	✓	—	✓	✓	✓
1280 x 720	1 280 x 720	37.1	49.8	60.5	R/D/H	—	—	—	—	—
	1 280 x 720	44.8	59.9	74.5	R/D/H	—	—	—	—	—
	1 280 x 720*10	76.3	100.0	131.8	R/D/H	—	—	—	—	—
	1 280 x 720*10	92.6	120.0	161.6	R/D/H	—	—	—	—	—
1280 x 768	1 280 x 768	39.6	49.9	65.3	R/D/H	—	—	—	—	—
	1 280 x 768	47.8	59.9	79.5	R/D/H	—	—	—	—	—
	1 280 x 768*11	47.4	60.0	68.3	R/D/H	—	—	—	—	—
	1 280 x 768	60.3	74.9	102.3	R/D/H	—	—	—	—	—
	1 280 x 768	68.6	84.8	117.5	R/D/H	—	—	—	—	—
1280 x 800	1 280 x 800	41.3	50.0	68.0	R/D/H	—	—	—	—	—
	1 280 x 800	49.7	59.8	83.5	R/D/H	—	—	—	—	—
	1 280 x 800*11	49.3	59.9	71.0	R/D/H	—	—	—	—	—
	1 280 x 800	62.8	74.9	106.5	R/D/H	—	—	—	—	—
	1 280 x 800	71.6	84.9	122.5	R/D/H	—	—	—	—	—
1280 x 960	1 280 x 960	60.0	60.0	108.0	R/D/H	—	—	—	—	—
1280 x 1024	1 280 x 1 024	52.4	50.0	88.0	R/D/H	—	—	—	—	—
	1 280 x 1 024	64.0	60.0	108.0	R/D/H	—	—	—	—	—
	1 280 x 1 024	72.3	66.3	125.0	R/D/H	—	—	—	—	—
	1 280 x 1 024	78.2	72.0	135.1	R/D/H	—	—	—	—	—
	1 280 x 1 024	80.0	75.0	135.0	R/D/H	✓	—	✓	✓	✓
	1 280 x 1 024	91.1	85.0	157.5	R/D/H	—	—	—	—	—
1366 x 768	1 366 x 768	39.6	49.9	69.0	R/D/H	—	—	—	—	—
	1 366 x 768	47.7	59.8	85.5	R/D/H	✓*12	—	✓*12	✓*12	✓*12
1400 x 1050	1 400 x 1 050	54.1	50.0	99.9	R/D/H	—	—	—	—	—
	1 400 x 1 050	64.0	60.0	108.0	R/D/H	—	—	—	—	—
	1 400 x 1 050	65.2	60.0	122.6	R/D/H	✓	—	✓	✓	✓
	1 400 x 1 050	65.3	60.0	121.8	R/D/H	—	—	—	—	—
	1 400 x 1 050	78.8	72.0	149.3	R/D/H	—	—	—	—	—
	1 400 x 1 050	82.2	75.0	155.9	R/D/H	—	—	—	—	—
1440 x 900	1 440 x 900	46.3	49.9	86.8	R/D/H	—	—	—	—	—
	1 440 x 900	55.9	59.9	106.5	R/D/H	—	—	—	—	—
1600 x 900	1 600 x 900	46.4	49.9	96.5	R/D/H	—	—	—	—	—
	1 600 x 900	55.9	60.0	119.0	R/D/H	✓	—	✓	✓	✓
1600 x 1200	1 600 x 1 200	61.8	49.9	131.5	R/D/H	—	—	—	—	—
	1 600 x 1 200	75.0	60.0	162.0	R/D/H	✓	—	✓	✓	✓
1680 x 1050	1 680 x 1 050	65.3	60.0	146.3	R/D/H	—	—	—	—	—
	1 680 x 1 050	54.1	50.0	119.5	R/D/H	—	—	—	—	—
1920 x 1080	1 920 x 1 080	55.6	49.9	141.5	R/D/H	—	—	—	—	—
	1 920 x 1 080*11	66.6	59.9	138.5	R/D/H	—	—	—	—	—
	1 920 x 1 080*13	67.2	60.0	173.0	R	—	—	—	—	—

Compatible signal	Resolution (Dots)	Scanning freq.		Dot clock freq. (MHz)	Format	Plug and play*1				
		Horizontal (kHz)	Vertical (Hz)			RGB2	DVI-D			HDMI
							EDID1	EDID2	EDID3	
1920 x 1200	1 920 x 1 200	61.8	49.9	158.3	R/D/H	—	—	—	—	—
	1 920 x 1 200*11	74.0	60.0	154.0	R/D/H	✓	—	✓	✓*14	✓*14
	1 920 x 1 200*13	74.6	59.9	193.3	R	—	—	—	—	—

*1 Signals with a ✓ in the Plug and play columns are signals described in EDID (extended display identification data) of the projector. If a signal has no ✓ in the Plug and play columns but has an entry in the Format column, it can be input. For signals without a ✓ in the Plug and play columns, there are instances when resolution cannot be selected on the computer even though the projector supports them.
*2 Only for single link connection
*3 Pixel-Repetition signal (dot clock frequency 27.0 MHz) only
*4 When a 1125 (1035)/60i signal was input, it is displayed as a 1125 (1080)/60i signal.
*5 Dual link 3G-SDI is supported for PT-DZ21K2 and PT-DS20K2.
*6 Only for PT-DZ16K2
*7 Only for PT-DZ21K2, PT-DS20K2
*8 Dual link HD-SDI is supported.
*9 Dual link 3G-SDI is supported.
*10 For PT-DZ21K2, PT-DS20K2, when [3D INPUT FORMAT] is set to [AUTO], it is displayed as a 3D image in frame sequential format. To display images in 2D, set [3D INPUT FORMAT] to [NATIVE].
*11 VESA CVT-RB (Reduced Blanking)-compliant
*12 Only for PT-DW17K2
*13 Samples the pixels in the image processing circuit and projects the image.
*14 Only for PT-DZ21K2

Note

- A signal with a different resolution is converted to the number of display dots. The number of display dots is as follows.
  - PT-DZ21K2: 1 920 x 1 200
  - PT-DS20K2: 1 400 x 1 050
  - PT-DW17K2: 1 366 x 768
  - PT-DZ16K2: 1 920 x 1 080
- The “i” at the end of the resolution indicates an interlaced signal.
- When interlaced signals are connected, flickering may occur on the projected image.
- DIGITAL LINK input compatible signal is the same as HDMI input compatible signal.

List of simultaneous input 2D compatible signals

The following table specifies the simultaneous input (2D) compatible video signals that the projector can project.

2D compatible signal	Resolution (Dots)	Scanning freq.		Dot clock freq. (MHz)	HDMI/DVI	SDI1/SDI2*1
		Horizontal (kHz)	Vertical (Hz)			
1080/50p	1 920 x 1 080	56.3	50.0	148.5	✓	✓
1080/60p	1 920 x 1 080	67.5	60.0	148.5	✓	✓
1366 x 768	1 366 x 768	39.6	49.9	69.0	✓	—
	1 366 x 768	47.7	59.8	85.5	✓	—
1400 x 1050	1 400 x 1 050	54.1	50.0	99.9	✓	—
	1 400 x 1 050	65.3	60.0	121.8	✓	—
1920 x 1080	1 920 x 1 080	55.6	49.9	141.5	✓	—
	1 920 x 1 080	66.6	59.9	138.5	✓	—
1920 x 1200	1 920 x 1 200	61.8	49.9	158.3	✓	—
	1 920 x 1 200	74.0	60.0	154.0	✓	—

*1 Only for PT-DZ21K2, PT-DS20K2

List of 3D compatible signals

(Only for PT-DZ21K2, PT-DS20K2)
The following table specifies the 3D compatible video signals that the projector can project.

- Abbreviations for input formats and 3D formats in the table have the following meanings.
  - FP: Frame packing format
  - SBS: Side by side format
  - TB: Top and bottom format
  - LBL: Line by line format
  - FS: Frame sequential format
  - 3G: 3G-SDI Level B simultaneous format
  - H-D: HDMI & DVI-D input simultaneous format
  - R1-2: RGB1 & RGB2 input simultaneous format
  - S1-2: SDI1 & SDI2 input simultaneous format

3D compatible signal	Resolution (Dots)	Scanning freq.		Dot clock freq. (MHz)	HDMI				DVI-D			
		Horizontal (kHz)	Vertical (Hz)		FP	SBS*1	TB	FS	SBS*1	TB	LBL	FS
720/60p	1 280 x 720	45.0	60.0	74.3	✓	✓	✓	—	✓	✓	✓	—
720/50p	1 280 x 720	37.5	50.0	74.3	✓	✓	✓	—	✓	✓	✓	—
1080/60i	1 920 x 1 080i	33.8	60.0	74.3	✓	✓	—	—	✓	✓	—	—
1080/50i	1 920 x 1 080i	28.1	50.0	74.3	✓	✓	—	—	✓	✓	—	—
1080/24p	1 920 x 1 080	27.0	24.0	74.3	✓	✓	✓	—	✓	✓	—	—
1080/24sF	1 920 x 1 080i	27.0	24.0	74.3	—	—	—	—	✓	✓	—	—
1080/25p	1 920 x 1 080	28.1	25.0	74.3	—	—	—	—	✓	✓	—	—
1080/30p	1 920 x 1 080	33.8	30.0	74.3	—	—	—	—	✓	✓	—	—
1080/60p	1 920 x 1 080	67.5	60.0	148.5	—	✓	✓	—	✓	✓	—	—
1080/50p	1 920 x 1 080	56.3	50.0	148.5	—	✓	✓	—	✓	✓	—	—
640 x 480	640 x 480	31.5	59.9	25.2	—	—	—	—	✓	—	—	—
800 x 600	800 x 600	37.9	60.3	40.0	—	—	—	—	✓	—	—	—
1024 x 768	1 024 x 768	39.6	50.0	51.9	—	—	—	—	✓	—	—	—
	1 024 x 768	48.4	60.0	65.0	—	—	—	—	✓	—	—	—
	1 024 x 768	81.4	100.0	113.3	—	—	—	✓	—	—	—	✓
	1 024 x 768	98.8	120.0	139.1	—	—	—	✓	—	—	—	✓
1152 x 864	1 152 x 864	53.7	60.0	81.6	—	—	—	—	✓	—	—	—
1280 x 720	1 280 x 720	37.1	49.8	60.5	—	—	—	—	✓	—	—	—
	1 280 x 720	44.8	59.9	74.5	—	—	—	—	✓	—	—	—
	1 280 x 720	76.3	100.0	131.8	—	—	—	✓	—	—	—	✓
	1 280 x 720	92.6	120.0	161.6	—	—	—	✓	—	—	—	✓
1280 x 768	1 280 x 768	39.6	49.9	65.3	—	—	—	—	✓	—	—	—
	1 280 x 768	47.8	59.9	79.5	—	—	—	—	✓	—	—	—
	1 280 x 768*2	47.4	60.0	68.3	—	—	—	—	✓	—	—	—
1280 x 800	1 280 x 800	41.3	50.0	68.0	—	—	—	—	✓	—	—	—
	1 280 x 800	49.7	59.8	83.5	—	—	—	—	✓	—	—	—
	1 280 x 800*2	49.3	59.9	71.0	—	—	—	—	✓	—	—	—
1280 x 960	1 280 x 960	60.0	60.0	108.0	—	—	—	—	✓	—	—	—
1280 x 1024	1 280 x 1 024	52.4	50.0	88.0	—	—	—	—	✓	—	—	—
	1 280 x 1 024	64.0	60.0	108.0	—	—	—	—	✓	—	—	—
1366 x 768	1 366 x 768	47.7	59.8	85.5	—	—	—	—	✓	—	—	—
	1 366 x 768	39.6	49.9	69.0	—	—	—	—	✓	—	—	—
1400 x 1050	1 400 x 1 050	54.1	50.0	99.9	—	—	—	—	✓	—	—	—
	1 400 x 1 050	64.0	60.0	108.0	—	—	—	—	✓	—	—	—
	1 400 x 1 050	65.2	60.0	122.6	—	—	—	—	✓	—	—	—
	1 400 x 1 050	65.3	60.0	121.8	—	—	—	—	✓	—	—	—
1440 x 900	1 440 x 900	55.9	59.9	106.5	—	—	—	—	✓	—	—	—
	1 440 x 900	46.3	49.9	86.8	—	—	—	—	✓	—	—	—

3D compatible signal	Resolution (Dots)	Scanning freq.		Dot clock freq. (MHz)	HDMI				DVI-D			
		Horizontal (kHz)	Vertical (Hz)		FP	SBS*1	TB	FS	SBS*1	TB	LBL	FS
1600 x 900	1 600 x 900	46.4	49.9	96.5	—	—	—	—	✓	—	—	—
	1 600 x 900	55.9	60.0	119.0	—	—	—	—	✓	—	—	—
1600 x 1200	1 600 x 1 200	75.0	60.0	162.0	—	—	—	—	✓	—	—	—
	1 600 x 1 200	61.8	49.9	131.5	—	—	—	—	✓	—	—	—
1680 x 1050	1 680 x 1 050	65.3	60.0	146.3	—	—	—	—	✓	—	—	—
	1 680 x 1 050	54.1	50.0	119.5	—	—	—	—	✓	—	—	—
1920 x 1080	1 920 x 1 080	55.6	49.9	141.5	—	—	—	—	✓	—	—	—
	1 920 x 1 080*2	66.6	59.9	138.5	—	—	—	—	✓	—	—	—
1920 x 1200	1 920 x 1 200	61.8	49.9	158.3	—	—	—	—	✓	—	—	—
	1 920 x 1 200*2	74.0	60.0	154.0	—	—	—	—	✓	—	✓	—

*1 Supports half.
*2 VESA CVT RB (Reduced Blanking) compliant

3D compatible signal	Resolution (Dots)	Scanning freq.		Dot clock freq. (MHz)	RGB1/RGB2				SDI1/SDI2				H-D	R1-2	S1-2
		Horizontal (kHz)	Vertical (Hz)		SBS*1	TB	LBL	FS	SBS*1	TB	LBL	3G			
720/60p	1 280 x 720	45.0	60.0	74.3	✓	✓	✓	—	✓	✓	✓	✓	✓	✓	✓
720/50p	1 280 x 720	37.5	50.0	74.3	✓	✓	✓	—	✓	✓	✓	✓	✓	✓	✓
1080/60i	1 920 x 1 080i	33.8	60.0	74.3	✓	✓	—	—	✓	✓	—	✓	✓	✓	✓
1080/50i	1 920 x 1 080i	28.1	50.0	74.3	✓	✓	—	—	✓	✓	—	✓	✓	✓	✓
1080/24p	1 920 x 1 080	27.0	24.0	74.3	✓	✓	—	—	✓	✓	—	✓	✓	✓	✓
1080/24sF	1 920 x 1 080i	27.0	24.0	74.3	✓	✓	—	—	✓	✓	—	✓	✓	✓	✓
1080/25p	1 920 x 1 080	28.1	25.0	74.3	✓	✓	—	—	✓	✓	—	✓	✓	✓	✓
1080/30p	1 920 x 1 080	33.8	30.0	74.3	✓	✓	—	—	✓	✓	—	✓	✓	✓	✓
1080/60p	1 920 x 1 080	67.5	60.0	148.5	✓	✓	—	—	✓	✓	—	—	✓	✓	✓
1080/50p	1 920 x 1 080	56.3	50.0	148.5	✓	✓	—	—	✓	✓	—	—	✓	✓	✓
640 x 480	640 x 480	31.5	59.9	25.2	✓	—	—	—	—	—	—	—	—	—	—
800 x 600	800 x 600	37.9	60.3	40.0	✓	—	—	—	—	—	—	—	—	—	—
1024 x 768	1 024 x 768	39.6	50.0	51.9	✓	—	—	—	—	—	—	—	—	—	—
	1 024 x 768	48.4	60.0	65.0	✓	—	—	—	—	—	—	—	—	—	—
	1 024 x 768	81.4	100.0	113.3	—	—	—	✓	—	—	—	—	—	—	—
	1 024 x 768	98.8	120.0	139.1	—	—	—	✓	—	—	—	—	—	—	—
1152 x 864	1 152 x 864	53.7	60.0	81.6	✓	—	—	—	—	—	—	—	—	—	—
1280 x 720	1 280 x 720	37.1	49.8	60.5	✓	—	—	—	—	—	—	—	—	—	—
	1 280 x 720	44.8	59.9	74.5	✓	—	—	—	—	—	—	—	—	—	—
	1 280 x 720	76.3	100.0	131.8	—	—	—	✓	—	—	—	—	—	—	—
	1 280 x 720	92.6	120.0	161.6	—	—	—	✓	—	—	—	—	—	—	—
1280 x 768	1 280 x 768	39.6	49.9	65.3	✓	—	—	—	—	—	—	—	—	—	—
	1 280 x 768	47.8	59.9	79.5	✓	—	—	—	—	—	—	—	—	—	—
	1 280 x 768*2	47.4	60.0	68.3	✓	—	—	—	—	—	—	—	—	—	—
1280 x 800	1 280 x 800	41.3	50.0	68.0	✓	—	—	—	—	—	—	—	—	—	—
	1 280 x 800	49.7	59.8	83.5	✓	—	—	—	—	—	—	—	—	—	—
	1 280 x 800*2	49.3	59.9	71.0	✓	—	—	—	—	—	—	—	—	—	—
1280 x 960	1 280 x 960	60.0	60.0	108.0	✓	—	—	—	—	—	—	—	—	—	—
1280 x 1024	1 280 x 1 024	52.4	50.0	88.0	✓	—	—	—	—	—	—	—	—	—	—
	1 280 x 1 024	64.0	60.0	108.0	✓	—	—	—	—	—	—	—	—	—	—
1366 x 768	1 366 x 768	47.7	59.8	85.5	✓	—	—	—	—	—	—	—	—	—	—
	1 366 x 768	39.6	49.9	69.0	✓	—	—	—	—	—	—	—	—	—	—
1400 x 1050	1 400 x 1 050	54.1	50.0	99.9	✓	—	—	—	—	—	—	—	✓	✓	—
	1 400 x 1 050	64.0	60.0	108.0	✓	—	—	—	—	—	—	—	✓	✓	—
	1 400 x 1 050	65.2	60.0	122.6	✓	—	—	—	—	—	—	—	✓	✓	—
	1 400 x 1 050	65.3	60.0	121.8	✓	—	—	—	—	—	—	—	✓	✓	—
1440 x 900	1 440 x 900	55.9	59.9	106.5	✓	—	—	—	—	—	—	—	—	—	—
	1 440 x 900	46.3	49.9	86.8	✓	—	—	—	—	—	—	—	—	—	—

3D compatible signal	Resolution (Dots)	Scanning freq.		Dot clock freq. (MHz)	RGB1/RGB2				SDI1/SDI2				H-D	R1-2	S1-2
		Horizontal (kHz)	Vertical (Hz)		SBS*1	TB	LBL	FS	SBS*1	TB	LBL	3G			
1600 x 900	1 600 x 900	46.4	49.9	96.5	✓	—	—	—	—	—	—	—	—	—	—
	1 600 x 900	55.9	60.0	119.0	✓	—	—	—	—	—	—	—	—	—	—
1600 x 1200	1 600 x 1 200	75.0	60.0	162.0	✓	—	—	—	—	—	—	—	—	—	—
	1 600 x 1 200	61.8	49.9	131.5	✓	—	—	—	—	—	—	—	—	—	—
1680 x 1050	1 680 x 1 050	65.3	60.0	146.3	✓	—	—	—	—	—	—	—	—	—	—
	1 680 x 1 050	54.1	50.0	119.5	✓	—	—	—	—	—	—	—	—	—	—
1920 x 1080	1 920 x 1 080	55.6	49.9	141.5	✓	—	—	—	—	—	—	—	—	—	—
	1 920 x 1 080*2	66.6	59.9	138.5	✓	—	—	—	—	—	—	—	—	—	—
1920 x 1200	1 920 x 1 200	61.8	49.9	158.3	✓	—	—	—	—	—	—	—	✓	✓	—
	1 920 x 1 200*2	74.0	60.0	154.0	✓	—	✓	—	—	—	—	—	✓	✓	—

*1 Supports half.
*2 VESA CVT RB (Reduced Blanking) compliant

Note

- DIGITAL LINK input compatible signal is the same as HDMI input compatible signal.

Specifications

The specifications of the projector are as follows.

Power supply		200 V - 240 V ～ (200 V - 240 V alternating current), 50 Hz/60 Hz	
Power consumption		2 060 W (11.5 A)	
		When [STANDBY MODE] is set to [ECO]: 0.3 W	
		When [STANDBY MODE] is set to [NORMAL]: 4 W	
DLP chip	**Size**	**PT-DZ21K2**	24.4 mm (0.96") (aspect ratio 16:10)
		PT-DS20K2	24.1 mm (0.95") (aspect ratio 4:3)
		PT-DW17K2	21.6 mm (0.85") (aspect ratio 16:9)
		PT-DZ16K2	24.1 mm (0.95") (aspect ratio 16:9)
	Display system	DLP chip x 3, DLP projection system	
	Number of pixels	**PT-DZ21K2**	2 304 000 pixels (1 920 x 1 200 dots)
		PT-DS20K2	1 470 000 pixels (1 400 x 1 050 dots)
		PT-DW17K2	1 049 088 pixels (1 366 x 768 dots)
		PT-DZ16K2	2 073 600 pixels (1 920 x 1 080 dots)
Lens		Optional	
Luminous lamp		432 W, UHM lamp x 4	
Light output[*1]		**PT-DZ21K2, PT-DS20K2**	20 000 lm (ANSI)
		PT-DW17K2	17 000 lm (ANSI)
		PT-DZ16K2	16 000 lm (ANSI)
Contrast ratio[*1]		10 000:1 (when [DYNAMIC IRIS] is set to [3])	
Color system		7 standards (NTSC/NTSC4.43/PAL/PAL-N/PAL-M/SECAM/PAL60)	
Projected image size		1.78 m (70") to 25.40 m (1 000")[*2]	
Image aspect ratio		**PT-DZ21K2**	16:10
		PT-DS20K2	4:3
		PT-DW17K2, PT-DZ16K2	16:9
Projection method		[FRONT/CEILING], [FRONT/FLOOR], [REAR/CEILING], [REAR/FLOOR]	
Power cord length		3.0 m (118-1/8")	
Outer case		Molded plastic	
Dimensions	**Width**	620 mm (24-13/32")	
	Height	255 mm (10-1/32") (excluding the feet)	
	Depth	730 mm (28-3/4") (excluding the lens mount cover)	

Weight		Approx. 41.0 kg (90.3 lbs.)*3
Noise level*1		46 dB
Operating environment	**Operating environment temperature*4**	0 °C (32 °F) to 45 °C (113 °F)
	Operating environment humidity	10 % to 80 % (no condensation)
Remote control	**Power supply**	DC 3 V (AA/R6/LR6 battery x 2)
	Operating range	Within approx. 30 m (98'5") (when operated directly in front of signal receiver)
	Weight	150 g (5.3 ozs.) (including batteries)
	Dimensions	Width: 47.5 mm (1-7/8"), Height: 181.5 mm (7-5/32"), Depth: 27.5 mm (1-3/32")

*1 Measurement, measuring conditions and method of notation all comply with ISO21118 international standards.
*2 When the zoom lens (Model No.: ET-D75LE8) is used, the projected image size for the maximum projection distance will be 1.78 m (70") to 15.24 m (600"). When the fixed-focus lens (Model No.: ET-D75LE90) is used, the projected image size for the maximum projection distance will be 3.05 m (120") to 15.24 m (600").
*3 Average value. Weight varies for each product.
*4 When using the projector at high altitudes (between 1 400 m (4 593') and 2 700 m (8 858') above sea level), the operating environment temperature should be between 0 °C (32 °F) and 40 °C (104 °F).
If you use the smoke cut filter, the operating environment temperature should be between 0 °C (32 °F) and 35 °C (95 °F). However, it cannot be used at high altitudes.
If you use the Replacement lamp unit (for portrait mode), the operating environment temperature should be between 0 °C (32 °F) and 40 °C (104 °F) when using it at elevations lower than 1 400 m (4 593') above sea level, and should be between 0 °C (32 °F) and 35 °C (95 °F) when using it at high altitudes (between 1 400 m (4 593') and 2 700 m (8 858') above sea level). If you use the Replacement lamp unit (for portrait mode) together with the smoke cut filter, the operating environment temperature should be between 0 °C (32 °F) and 30 °C (86 °F). (Only for PT-DZ21K2, PT-DS20K2, PT-DW17K2)

■ Applicable scanning frequency

Refer to “List of compatible signals” (➡ page 209) for the types of video signals that can be used with the projector.

For video signal, Y/C signal	Horizontal: 15.73 kHz, Vertical: 59.94 Hz; Horizontal: 15.63 kHz, Vertical: 50 Hz
For RGB signal	Horizontal: 15 kHz to 100 kHz, Vertical: 24 Hz to 120 Hz PIAS (Panasonic Intelligent Auto Scanning) system
	• Dot clock frequency: 162 MHz or less
For YC_BC_R/YP_BP_R signal	• 525i (480i) Horizontal: 15.73 kHz, Vertical: 59.94 Hz • 525p (480p) Horizontal: 31.47 kHz, Vertical: 59.94 Hz • 750 (720)/60p Horizontal: 45 kHz, Vertical: 60 Hz • 1125 (1035)/60i Horizontal: 33.75 kHz, Vertical: 60 Hz • 1125 (1080)/50i Horizontal: 28.13 kHz, Vertical: 50 Hz • 1125 (1080)/24sF Horizontal: 27 kHz, Vertical: 48 Hz • 1125 (1080)/30p Horizontal: 33.75 kHz, Vertical: 30 Hz • 1125 (1080)/50p Horizontal: 56.25 kHz, Vertical: 50 Hz • 625i (576i) Horizontal: 15.63 kHz, Vertical: 50 Hz • 625p (576p) Horizontal: 31.25 kHz, Vertical: 50 Hz • 750 (720)/50p Horizontal: 37.5 kHz, Vertical: 50 Hz • 1125 (1080)/60i Horizontal: 33.75 kHz, Vertical: 60 Hz • 1125 (1080)/24p Horizontal: 27 kHz, Vertical: 24 Hz • 1125 (1080)/25p Horizontal: 28.13 kHz, Vertical: 25 Hz • 1125 (1080)/60p Horizontal: 67.5 kHz, Vertical: 60 Hz • The SYNC/HD and VD terminals do not support 3 value SYNC.
For DVI-D signal	525i (480i)*1, 625i (576i)*1, 525p (480p), 625p (576p), 750 (720)/60p, 750 (720)/50p, 1125 (1080)/60i, 1125 (1080)/50i, 1125 (1080)/24p, 1125 (1080)/24sF, 1125 (1080)/25p, 1125 (1080)/30p, 1125 (1080)/60p, 1125 (1080)/50p
	• Displayable resolution: 640 x 480 to 1 920 x 1 200 (non-interlaced) • Dot clock frequency: 25 MHz to 162 MHz
For HDMI signal	525i (480i)*1, 625i (576i)*1, 525p (480p), 625p (576p), 750 (720)/60p, 750 (720)/50p, 1125 (1080)/60i, 1125 (1080)/50i, 1125 (1080)/24p, 1125 (1080)/24sF, 1125 (1080)/25p, 1125 (1080)/30p, 1125 (1080)/60p, 1125 (1080)/50p
	• Displayable resolution: 640 x 480 to 1 920 x 1 200 (non-interlaced) • Dot clock frequency: 25 MHz to 162 MHz
For SDI signal (Only for PT-DZ21K2, PT-DS20K2, PT-DZ16K2)	**SD-SDI signal** SMPTE ST 259 compliant YC_BC_R 4:2:2 10-bit 480i, 576i **Single link HD-SDI signal** SMPTE ST 292 compliant YP_BP_R 4:2:2 10-bit 720/50p, 720/60p, 1035/60i, 1080/50i, 1080/60i, 1080/25p, 1080/24p, 1080/24sF, 1080/30p **Dual link HD-SDI signal***2 SMPTE ST 372 compliant RGB 4:4:4 12-bit/10-bit 1080/50i, 1080/60i, 1080/25p, 1080/24p, 1080/24sF, 1080/30p, 2048 x 1080/24p, 2048 x 1080/24sF X'Y'Z' 4:4:4 12-bit 2048 x 1080/24p, 2048 x 1080/24sF **3G-SDI signal** SMPTE ST 424 compliant YP_BP_R 4:2:2 10-bit 1080/50p, 1080/60p RGB 4:4:4 12-bit/10-bit 1080/50i, 1080/60i, 1080/25p, 1080/24p, 1080/24sF, 1080/30p **Dual link 3G-SDI signal***2 SMPTE ST 425 compliant YP_BP_R 4:4:4 12-bit/10-bit 1080/60p, 1080/50p, 2048 x 1080/60p, 2048 x 1080/50p, 2048 x 1080/48p RGB 4:4:4 12-bit/10-bit 1080/60p, 1080/50p, 2048 x 1080/60p, 2048 x 1080/50p, 2048 x 1080/48p

*1 Pixel-Repetition signal (dot clock frequency 27.0 MHz) only
*2 Only for PT-DZ21K2, PT-DS20K2

Note

- DIGITAL LINK input compatible signal is the same as HDMI input compatible signal.

■ Terminal

<RGB 1 IN> terminal	1 set (BNC x 5 (RGB/YP_BP_R/YC_BC_R/YC/VIDEO x 1))		
	RGB signal	0.7 V [p-p] 75 Ω (SYNC ON GREEN: 1.0 V [p-p] 75 Ω)	
		SYNC/HD	TTL high impedance, automatic positive/negative polarity compatible
		VD	TTL high impedance, automatic positive/negative polarity compatible
	YP_BP_R signal	Y: 1.0 V [p-p] including synchronization signal, P_BP_R: 0.7 V [p-p] 75 Ω	
	Y/C signal	Y: 1.0 V [p-p], C: 0.286 V [p-p] 75 Ω	
	VIDEO signal	1.0 V [p-p] 75 Ω	
<RGB 2 IN> terminal	1 set, high-density D-Sub 15 p (female)		
	RGB signal	0.7 V [p-p] 75 Ω (SYNC ON GREEN: 1.0 V [p-p] 75 Ω)	
		SYNC/HD	TTL high impedance, automatic positive/negative polarity compatible
		VD	TTL high impedance, automatic positive/negative polarity compatible
	YP_BP_R signal	Y: 1.0 V [p-p] including synchronization signal, P_BP_R: 0.7 V [p-p] 75 Ω	
<DVI-D IN> terminal	1 set, DVI-D 24 p, single link, DVI 1.0 compliant, HDCP compatible		
<HDMI IN> terminal	1 set, HDMI 19 p, HDCP compatible, Deep Color compatible		
<SDI IN 1> terminal (Only for PT-DZ21K2, PT-DS20K2) **<SDI IN> terminal (Only for PT-DZ16K2)**	1 set (BNC)		
	SD-SDI signal	SMPTE ST 259 compliant	
	HD-SDI signal	SMPTE ST 292 compliant	
	3G-SDI signal	SMPTE ST 424 compliant	
	Dual link HD-SDI (LINK-A) signal*1	SMPTE ST 372 compliant	
	Dual link 3G-SDI (Link 1) signal*1	SMPTE ST 425 compliant	
<SDI IN 2> terminal (Only for PT-DZ21K2, PT-DS20K2)	1 set (BNC)		
	SD-SDI signal	SMPTE ST 259 compliant	
	HD-SDI signal	SMPTE ST 292 compliant	
	3G-SDI signal	SMPTE ST 424 compliant	
	Dual link HD-SDI (LINK-B) signal	SMPTE ST 372 compliant	
	Dual link 3G-SDI (Link 2) signal	SMPTE ST 425 compliant	
<3D SYNC 1 IN/OUT> terminal (Only for PT-DZ21K2, PT-DS20K2)	1 set (BNC)		
	During input setting	TTL high impedance	
	During output setting	TTL output: Maximum 10 mA	
<3D SYNC 2 OUT> terminal (Only for PT-DZ21K2, PT-DS20K2)	1 set (BNC) TTL output: Maximum 10 mA		
<SERIAL IN>/ <SERIAL OUT> terminal	D-Sub 9 p, 1 set each, RS-232C compliant, for computer control		
<REMOTE 1 IN>/ <REMOTE 1 OUT> terminal	M3 stereo mini jack, 1 set each, for remote control (wired)/for projector connection control		
<REMOTE 2 IN> terminal	1 set, D-Sub 9 p, for contact control		
<DIGITAL LINK/LAN> terminal	1 set, RJ-45, for network and DIGITAL LINK connections, PJLink compatible, 100Base-TX, Art-Net compatible		

*1 Only for PT-DZ21K2, PT-DS20K2

Note

- The model numbers of accessories and optional accessories are subject to change without prior notice.

Dimensions

Unit: mm

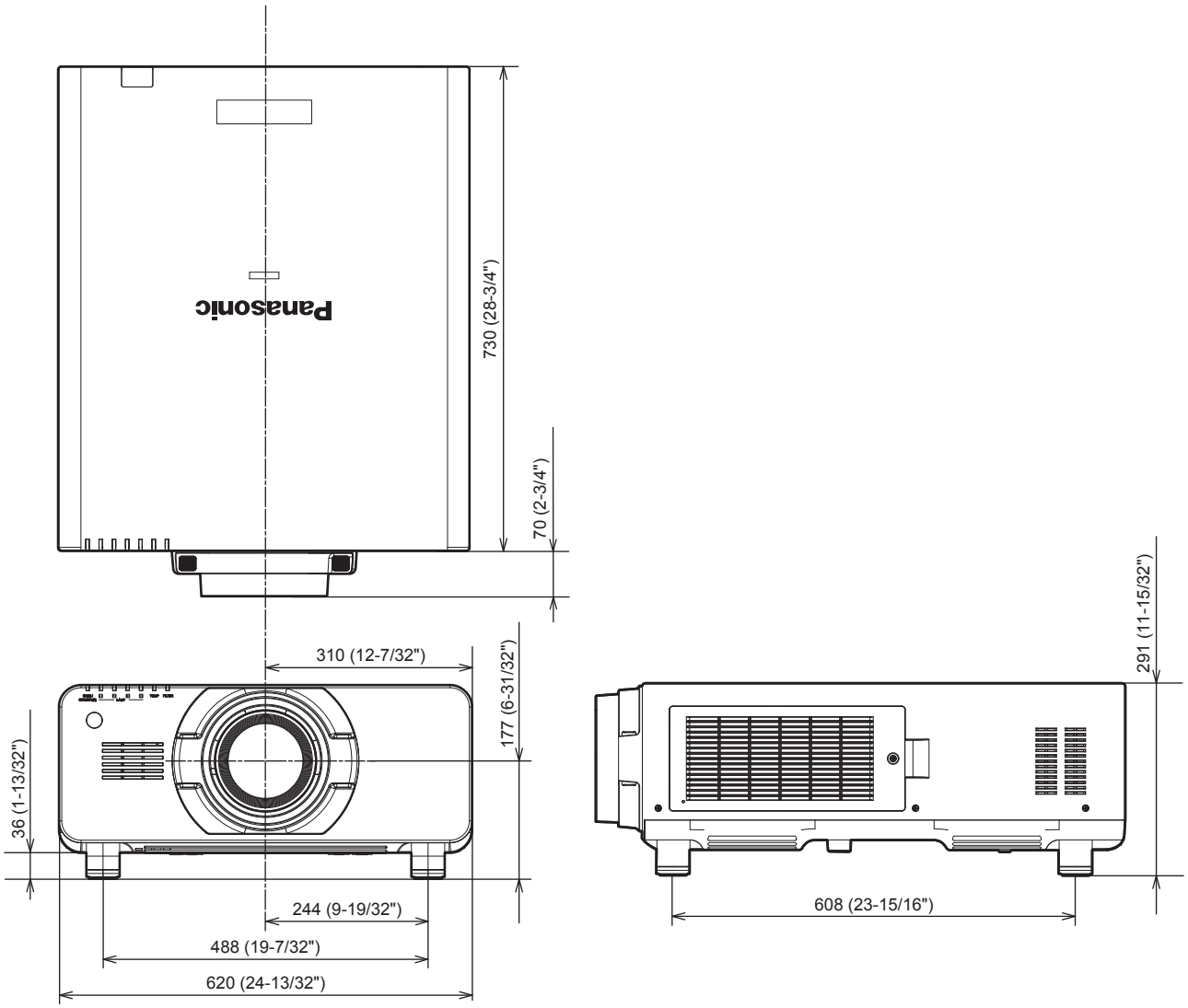

* Actual dimensions may differ depending on the product.

Precautions for attaching the ceiling mount bracket

- When installing the projector to a ceiling, be sure to use the specified optional Ceiling mount bracket (Model No.: ET-PKD520H (for high ceilings), ET-PKD520S (for low ceilings), ET-PKD520B (Projector Mount Bracket)). The Ceiling mount bracket (Model No.: ET-PKD520H (for high ceilings), ET-PKD520S (for low ceilings)) is used in combination with the Ceiling mount bracket (Model No.: ET-PKD520B (Projector Mount Bracket)).
- When installing the projector, attach the drop-prevention set that comes with the ceiling mount bracket to the projector. If you need the drop-prevention set (hex bolt with washer (M10 x 40), wire rope: TTRA0143) separately, consult your dealer.
- Ask a qualified technician to do the installation work such as mounting the projector on the ceiling.
- Panasonic takes no responsibility for any damage to the projector resulting from use of a ceiling mount bracket not manufactured by Panasonic or the inappropriate choice of location for installation, even if the warranty period of the projector has not expired.
- Unused products must be removed promptly by a qualified technician.
- Referring to the following screw holes for ceiling mount diagram, use screws of sufficient length to reach the embedded nuts.
- Use a torque screwdriver or Allen torque wrench to tighten bolts to their specified tightening torques. Do not use electric screwdrivers or impact screwdrivers.
- Read the Installation Instructions for the ceiling mount bracket for details.
- The model numbers of accessories and optional accessories are subject to change without prior notice.

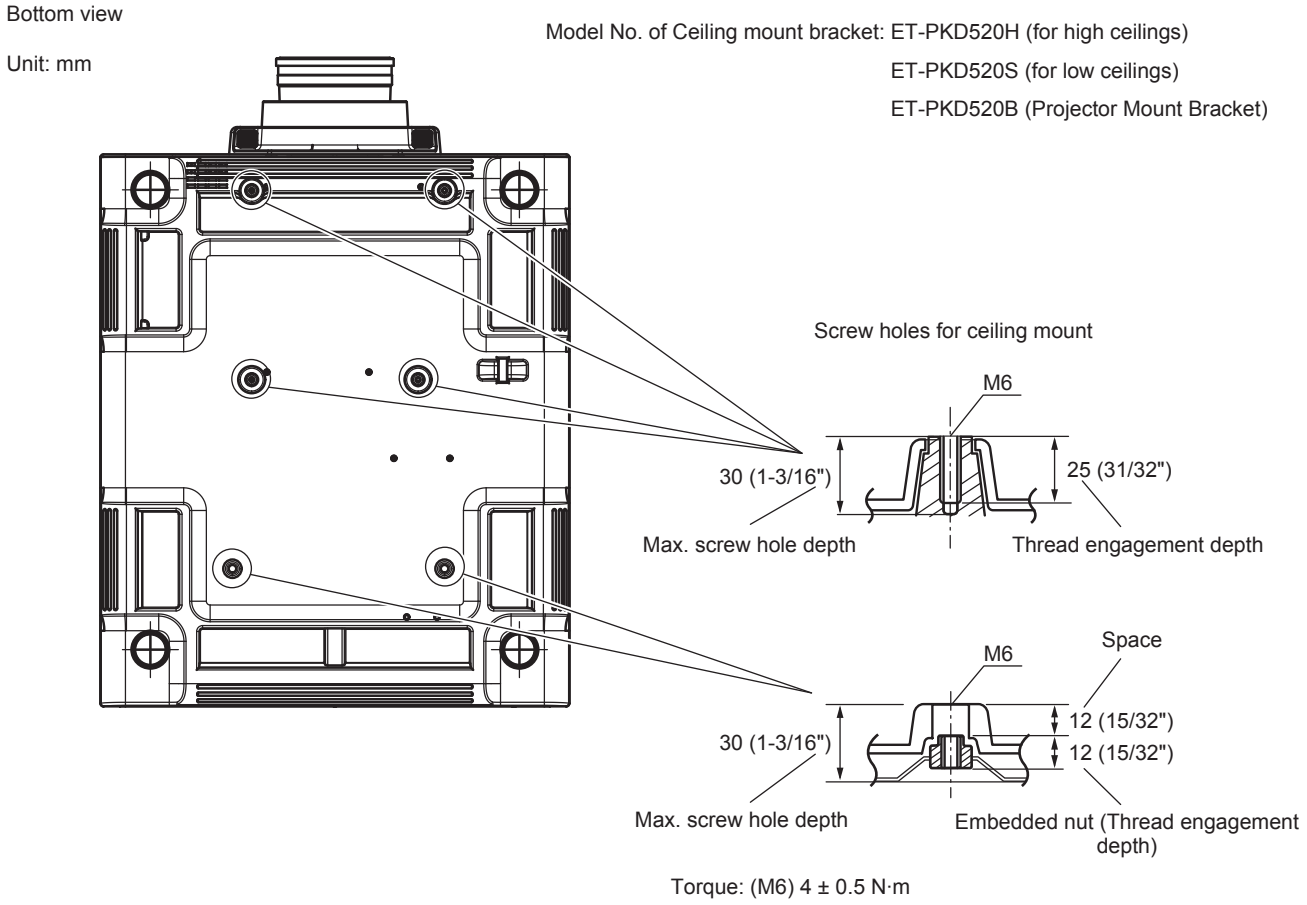

Index

0 – 9

[3D COLOR MATCHING] 104
[3D FRAME DELAY] 106
[3D INPUT FORMAT] 104
[3D PICTURE BALANCE] 105
[3D SAFETY PRECAUTIONS] 107
[3D SETTINGS] 80, 103
[3D SYNC SETTING] 103
[3D SYSTEM SETTING] 103
[3D TEST MODE] 106
[3D TEST PATTERN] 106

A

Accessories 23
<AC IN> terminal 28, 58
[AC VOLTAGE MONITOR] 138
Adjusting adjustable feet 49
[ADVANCED MENU] 79, 96
Air filter unit 181
Air filter unit compartment 181
Art-Net 21, 195
[Art-Net CHANNEL SETTING] 157
[Art-Net STATUS] 158
[ASPECT] 91
<ASPECT> button
Remote control 25, 73
Aspect function 73
Attaching/removing the projection lens 50
Automatic setup function 73
[AUTO SETUP] 110
<AUTO SETUP> button
Projector body 28, 73
Remote control 25, 73
[AUTO SIGNAL] 110

B

[BACK COLOR] 121
[BACKUP INPUT SETTING] 111
[BLANKING] 96
[BRIGHTNESS] 84
[BRIGHTNESS CONTROL] 128

C

Cautions on use 22
Cautions when installing 18
Cautions when transporting 18
Ceiling mount bracket 220
[CLAMP POSITION] 97
[CLOCK PHASE] 93
[COLOR] 84
[COLOR MATCHING] 108
[COLOR TEMPERATURE] 84
Connecting the power cord 58
Connecting the remote control to the projector with a cable 31
Connection 52
[CONTRAST] 83
[CONTROL DEVICE PASSWORD CHANGE] 152
[CONTROL DEVICE SETUP] 151
[Crestron Connected(TM)] 175
[CUT OFF] 125

D

[DARK TIME SETTING] 105
[DATE AND TIME] 139
<DEFAULT> button
Remote control 25, 78
Deleting the registered signal 147
[DIGITAL CINEMA REALITY] 96
DIGITAL LINK 21
<DIGITAL LINK> button
Projector body 28
Remote control 25
[DIGITAL LINK IN] 117
[DIGITAL LINK MENU] 157
[DIGITAL LINK MODE] 154
[DIGITAL LINK SETUP] 154
[DIGITAL LINK STATUS] 155
Dimensions 219
Display language 80, 102
[DISPLAY OPTION] 80, 108
[DISPLAY SETTING] 150
Disposal 21
<DVI-D> button
Projector body 28, 71
Remote control 25, 71
[DVI-D IN] 114
[DYNAMIC IRIS] 88

E

Early Warning Software 21
[EDGE BLENDING] 98
<ENTER> button
Projector body 28
Remote control 25
Expanding signal lock-in range 148

F

Filter indicator 179
<FOCUS> button
Remote control 25, 65
[FRAME CREATION] 100
[FRAME LOCK] 100
[FRAME RESPONSE] 99
[FREEZE] 123
Function button 74
<FUNCTION> button
Remote control 25, 74
[FUNCTION BUTTON] 139

G

[GAMMA] 86
[GEOMETRY] 93

H

<HDMI> button
Projector body 28, 71
Remote control 25, 71
[HDMI IN] 115

I

<ID ALL> button
Remote control 25, 75
<ID SET> button
Remote control 25, 75
[IMAGE ROTATION] 121
[INITIALIZE] 143
Initial setting 60
[INITIAL STARTUP] 135
<INPUT MENU> button
Remote control 25, 71
[INPUT RESOLUTION] 97
Input selection terminal indicator 28
Installation mode 33

L

Lamp indicator 179
[LAMP RELAY] 127
[LAMP SELECT] 126
Lamp unit cover 27
[LARGE SCREEN CORRECTION] 109
[LEFT/RIGHT SWAP] 104
<LENS> button
Projector body 28
[LENS CALIBRATION] 140
[LENS MEMORY] 141
<LIGHT> button
Remote control 25
<LIGHT> switch
Projector body 28
List of compatible signals 209
[LOAD ALL USER DATA] 143
<LOCK> button
Remote control 25

M

Main menu 78
Main power switch 28, 59
Maintenance 181
<MENU> button
Projector body 28, 77
Remote control 25, 77
Menu item 79

N

Navigating through the menu 77
[NETWORK] 82, 154
Network connection 158
[NETWORK CONTROL] 156
[NETWORK SETUP] 155
[NETWORK STATUS] 156
[NOISE REDUCTION] 88
[NO SIGNAL SHUT-OFF] 138

O

<ON SCREEN> button
Remote control 25, 73
[ON-SCREEN DISPLAY] 119
On-screen menu 77
Optional accessories 24

P

[PICTURE] 79, 83
[PICTURE MODE] 83
[P IN P] 81, 144
P IN P function 144
[POSITION] 79, 91
Power cord 58
Power indicator 58
Power on button
Projector body 28
Remote control 25
Power standby button
Projector body 28
Remote control 25
Precautions for attaching the ceiling mount bracket 220
Precautions for use 18
Projecting 65
[PROJECTION METHOD] 126
Projector body 27
[PROJECTOR ID] 126
[PROJECTOR SETUP] 81, 126
Protecting the registered signal 148

R

[RASTER POSITION] 101
Read this first! 5
Registering new signals 147
<REMOTE 1 IN> terminal 31
<REMOTE 1 OUT> terminal 31
<REMOTE 2 IN> terminal 206
[REMOTE2 MODE] 139
Remote control 25
Remote control operations 71
Renaming the registered signal 147
Replacing the air filter unit 187
Replacing the lamp unit 183
Replacing the unit 183
Resetting to the factory default 78
<RGB1> button
Projector body 28, 71
Remote control 25, 71
<RGB2> button
Projector body 28, 71
Remote control 25, 71
[RGB IN] 113
[RS-232C] 135, 201

S

[SAFETY PRECAUTIONS MESSAGE] 107
[SAVE ALL USER DATA] 142
[SCHEDULE] 133
[SCREEN SETTING] 109
<SDI 1/2> button
Projector body 28, 71
<SDI> button
Remote control 25, 71
[SDI IN] 118
Security 21
[SECURITY] 81, 150
[SECURITY PASSWORD] 150
[SECURITY PASSWORD CHANGE] 150
Selecting the input signal 65
Self-diagnosis display 28, 190
<SERIAL IN> terminal 201
<SERIAL OUT> terminal 201
[SERVICE PASSWORD] 143
Setting ID number of the remote control 75
Setting up 33
[SHARPNESS] 87
[SHIFT] 91
<SHIFT> button
Remote control 25, 65
<SHUTTER> button
Projector body 28, 72
Remote control 25, 72
[SHUTTER SETTING] 122
[SIGNAL LIST] 81, 147
[SIMUL INPUT SETTING] 112
Specifications 215
sRGB-compliant video 90
[STANDBY MODE] 133
[STARTUP INPUT SELECT] 135
[STARTUP LOGO] 121
[STATUS] 137

<STATUS> button
Remote control 25, 74
Sub memory 149
<S-VIDEO Y/C> button
Remote control 25, 71
Switching off the projector 64
Switching on the projector 59
Switching the input signal 71
[SYSTEM DAYLIGHT VIEW] 87
[SYSTEM SELECTOR] 89

T

Temperature indicator 179
[TEST PATTERN] 81, 146
<TEST PATTERN> button
Remote control 25, 74
[TEXT CHANGE] 151
[TINT] 84
Troubleshooting 188
Two-window 207

U

[UNIFORMITY] 122
Upgrade Kit 208

V

<VIDEO> button
Remote control 25, 71

W

[WAVEFORM MONITOR] 123

Z

[ZOOM] 92
<ZOOM> button
Remote control 25, 65

Information for Users on Collection and Disposal of Old Equipment and used Batteries

These symbols on the products, packaging, and/or accompanying documents mean that used electrical and electronic products and batteries should not be mixed with general household waste. For proper treatment, recovery and recycling of old products and used batteries, please take them to applicable collection points, in accordance with your national legislation and the Directives 2002/96/EC and 2006/66/EC.

By disposing of these products and batteries correctly, you will help to save valuable resources and prevent any potential negative effects on human health and the environment which could otherwise arise from inappropriate waste handling.

EU

For more information about collection and recycling of old products and batteries, please contact your local municipality, your waste disposal service or the point of sale where you purchased the items.

Penalties may be applicable for incorrect disposal of this waste, in accordance with national legislation.

EU

For business users in the European Union
If you wish to discard electrical and electronic equipment, please contact your dealer or supplier for further information.

Cd

Information on Disposal in other Countries outside the European Union
These symbols are only valid in the European Union. If you wish to discard these items, please contact your local authorities or dealer and ask for the correct method of disposal.

Note for the battery symbol (bottom two symbol examples):
This symbol might be used in combination with a chemical symbol. In this case it complies with the requirement set by the Directive for the chemical involved.

Product Information (for Turkey only)

AEEE Yönetmeliğine Uygundur.
Eski Ekipman ve Bataryaların İşlenmesi.
Sadece geri dönüşüm sistemleri olan Avrupa Birliği ve ülkeleri için geçerlidir.

Ürünler, ambalaj ve/veya ekli belgeler üzerindeki bu semboller kullanılmış elektrik ve elektronik ürünlerin ve pillerin genel ev atığı ile karıştırılmaması gerektiğini ifade eder.
Eski ürünlerin ve pillerin toplanması ve geri kazanılması için bu atıkları lütfen yasayla belirlenmiş olan uygun toplama merkezlerine teslim ediniz.
Bu atıkların doğru işlenmesiyle, değerli kaynakların korunmasına ve insan sağlığı ve çevreye olası negatif etkilerinin engellenmesine yardımcı olabilirsiniz.
Atıkların toplanması ve geri dönüşümü için detaylı bilgi için lütfen bağlı olduğunuz yerel yönetimlerle iletişime geçiniz.
Atıkların atılmasıyla ilgili yanlış uygulamalar yasayla belirlenmiş olan cezalara sebebiyet verebilir.

Panasonic Corporation

Web Site : http://panasonic.net/avc/projector/
© Panasonic Corporation 2015

Panasonic System Communications Company of North America
5th Floor, Two Riverfront Plaza, Newark, NJ 07102-5490
TEL: (877) 803 - 8492

Panasonic Canada Inc.
5770 Ambler Drive, Mississauga, Ontario L4W 2T3
TEL: (905) 624 - 5010

W0715NN1105 -YI