ORDER NO. MKE0605850CE
B2

Service Manual

Multi Media Display

PbF
Solder Lead free

PT-52LCX66
PT-56LCX66
PT-61LCX66
PT-52LCX16
PT-56LCX16

⚠ WARNING

This service information is designed for experienced repair technicians only and is not designed for use by the general public.
It does not contain warnings or cautions to advise non-technical individuals of potential dangers in attempting to service a product.
Products powered by electricity should be serviced or repaired only by experienced professional technicians. Any attempt to service or repair the product or products dealt with in this service information by anyone else could result in serious injury or death.

Panasonic®

© 2006 Panasonic Shikoku Electronics Co., Ltd. All rights reserved. Unauthorized copying and distribution is a violation of law.

This manual downloaded from http://www.manualowl.com

CONTENTS

Page

1 Safety Precautions ... 3
1.1. General Guidelines ... 3
1.2. Leakage Current Cold Check ... 3
1.3. Leakage Current Hot Check ... 3
1.4. UV-Precaution ... 3
2 Warning ... 4
2.1. Prevention of Electro Static Discharge (ESD) to Electrostatically Sensitive (ES) Devices ... 4
3 Service Navigation ... 5
3.1. Introduction ... 5
3.2. About Lead Free Solder (PbF) ... 5
4 Specifications ... 6
5 Location of Controls and Components ... 7
5.1. Operation Instructions ... 7
5.2. Replacement of Lamp ... 10
6 Service Mode ... 11
7 Troubleshooting Guide ... 21
7.1. Troubleshooting Hints for Block Level Repair ... 21
8 Disassembly and Assembly Instructions ... 32
8.1. Cabinet Section ... 32
9 Measurements and Adjustments ... 47
9.1. Adjustment Procedures 1 ... 47
10 Maintenance ... 50
10.1. Cleaning Methods ... 50
11 Block Diagrams ... 51
12 Schematic Diagrams ... 61

Page

12.1. SCHEMATIC DIAGRAM AND CIRCUIT BOARD LAYOUT NOTES ... 61
12.2. INTERCONNECTION SCHEMATIC DIAGRAM ... 62
12.3. FRONT JACK / OPERATION SCHEMATIC DIAGRAM ... 63
12.4. POWER SWITCH / THERMISTOR 2 / COVER SWITCH SCHEMATIC DIAGRAMS ... 64
12.5. VOLTAGE CHART ... 65
13 Printed Circuit Board ... 67
13.1. FRONT JACK / OPERATION P.C.B. / POWER SWITCH P.C.B. / THERMISTOR 2 P.C.B. / COVER SWITCH P.C.B. ... 67
14 Exploded Views ... 69
14.1. MAIN PARTS SECTION ... 69
14.2. BASE BODY SECTION ... 71
14.3. DISPLAY SECTION ... 72
14.4. SCREEN SECTION ... 74
14.5. PROJECTION SECTION ... 76
14.6. TV UNIT SECTION ... 77
14.7. PACKING PARTS AND ACCESSORIES SECTION ... 78
15 Replacement Parts List ... 79
15.1. REPLACEMENT NOTES ... 79
15.2. MECHANICAL REPLACEMENT PARTS LIST ... 80
15.3. OPTIONAL ACCESSORY REPLACEMENT PARTS LIST ... 81
15.4. ELECTRICAL REPLACEMENT PARTS LIST ... 81

This manual downloaded from http://www.manualowl.com

1 Safety Precautions

1.1. General Guidelines

1. For continued safety, no modification of any circuit should be attempted.
2. Disconnect AC Plug before disassembling this unit.
3. It is advisable to use an isolation transformer in the AC supply before servicing.
4. When servicing, observe the original lead dress. If a short circuit is found, replace all parts which have been overheated or damaged by the short circuit.
5. After servicing, see to it that all the protective devices such as insulation barriers, insulation papers, shield, and isolation R-C combinations etc. are properly installed.
6. After servicing, be sure to restore the wires, leads, insulation barriers, shields, etc.
7. After servicing, make the leakage current checks to prevent the customer from being exposed to shock hazards.

Caution:

Use a separate Isolation Transformer for this unit when servicing.

1.2. Leakage Current Cold Check

1. Unplug the AC cord and connect a jumper between the two prongs on the plug.
2. For physically operated power switches, turn power on. Otherwise skip step 2.
3. Measure the resistance value, with an ohmmeter, between the jumpered AC plug and each exposed metallic cabinet part on the receiver, such as screwheads, connectors, etc. When the exposed metallic part has a return path to the chassis, the reading should be between 1 MΩ and 12 MΩ. When the exposed metal does not have a return path to the chassis, the reading must be infinity.

1.3. Leakage Current Hot Check

1. Plug the AC cord directly into the AC outlet.

   Do not use an isolation transformer for this check.
2. Connect "A" to exposed metallic part on the set. And connect "B" to a good earth ground, as shown in Figure 1.
3. Use an AC voltmeter, with 1 kΩ/V or more sensitivity, to measure the potential across the resistor.
4. Check each exposed metallic part, and measure the voltage at each point.
5. Reverse the AC plug in the AC outlet and repeat each of the above measurements.
6. The potential at any point should not exceed 0.25 V RMS.

   A leakage current tester (Simpson Model 228 equivalent) may be used to make the hot checks. Leakage current must not exceed 1/2 mA. In case a measurement is outside of the limits specified, there is a possibility of shock hazard, and the receiver should be repaired and rechecked before it is returned to the customer.

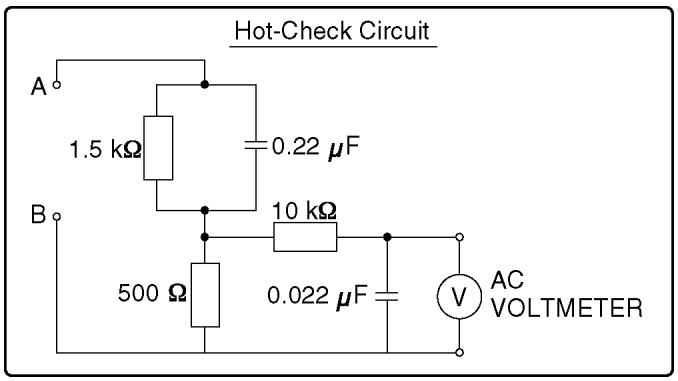

Figure 1

1.4. UV-Precaution

1. Be sure to disconnect the AC Plug when replacing the lamp.
2. Since the lamp reaches a very high temperature during its operation, wait until it has completely cooled off when replacing the Lamp Unit.
3. The lamp emits small amounts of UV-Radiation.

   Avoid direct-eye contact by covering the Lamp and wearing the UV protective glasses.
4. The high pressure lamp involves a risk of explosion.

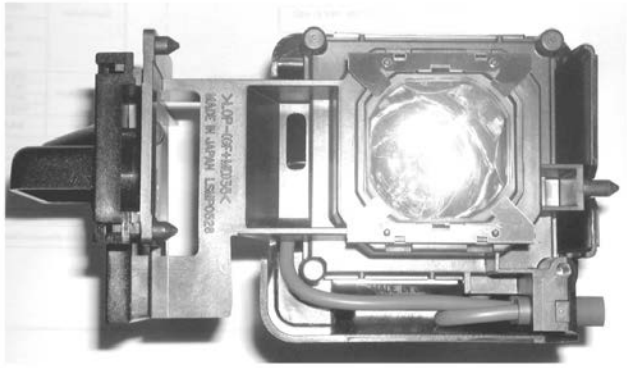

Figure 2

This product has a High Intensity Discharge (HID) lamp that contains a small amount of mercury. Disposal of these materials may be regulated in your community due to environmental considerations. For disposal or recycling information please contact your local authorities, or the Electronics Industries Alliance: <http://www.eiae.org.>

This manual downloaded from http://www.manualowl.com

2 Warning

2.1. Prevention of Electro Static Discharge (ESD) to Electrostatically Sensitive (ES) Devices

Some semiconductor (solid state) devices can be damaged easily by static electricity. Such components commonly are called Electrostatically Sensitive (ES) Devices. Examples of typical ES devices are integrated circuits and some field-effect transistors and semiconductor "chip" components. The following techniques should be used to help reduce the incidence of component damage caused by electro static discharge (ESD).

1. Immediately before handling any semiconductor component or semiconductor-equipped assembly, drain off any ESD on your body by touching a known earth ground. Alternatively, obtain and wear a commercially available discharging ESD wrist strap, which should be removed for potential shock reasons prior to applying power to the unit under test.
2. After removing an electrical assembly equipped with ES devices, place the assembly on a conductive surface such as aluminum foil, to prevent electrostatic charge buildup or exposure of the assembly.
3. Use only a grounded-tip soldering iron to solder or unsolder ES devices.
4. Use only an antistatic solder removal device. Some solder removal devices not classified as "antistatic (ESD protected)" can generate electrical charge sufficient to damage ES devices.
5. Do not use freon-propelled chemicals. These can generate electrical charges sufficient to damage ES devices.
6. Do not remove a replacement ES device from its protective package until immediately before you are ready to install it. (Most replacement ES devices are packaged with leads electrically shorted together by conductive foam, aluminum foil or comparable conductive material).
7. Immediately before removing the protective material from the leads of a replacement ES device, touch the protective material to the chassis or circuit assembly into which the device will be installed.

   CAUTION :

   Be sure no power is applied to the chassis or circuit, and observe all other safety precautions.
8. Minimize bodily motions when handling unpackaged replacement ES devices. (Otherwise harmless motion such as the brushing together of your clothes fabric or the lifting of your foot from a carpeted floor can generate static electricity (ESD) sufficient to damage an ES device).

This manual downloaded from http://www.manualowl.com

3 Service Navigation

3.1. Introduction

This service manual contains technical information which will allow service personnel´s to understand and service this model. Please place orders using the parts list and not the drawing reference numbers.

If the circuit is changed or modified, this information will be followed by supplement service manual to be filed with original service manual.

3.2. About Lead Free Solder (PbF)

Distinction of PbF PCB:

PCBs (manufactured) using lead free solder will have a PbF printing on the PCB.
(Please refer to figures.)

Printed case

CAUTION:

- **Pb free solder has a higher melting point than standard solder;**
  Typically the melting point is 50 °F - 70 °F (30 °C - 40 °C) higher.
  Please use a soldering iron with temperature control and adjust it to 700 °F±20 °F (370 °C± 10 °C).
  In case of using high temperature soldering iron, please be carefull not to heat too long.
- **Pb free solder will tend to splash when heated too high (about 1100 °F/600 °C).**
- **All products with the printed circuit board with PbF stamp or printing must be serviced with lead free solder.**
  When soldering or unsoldering, completely remove all of the solder from the pins or solder area,
  and be sure to heat the soldering points with the lead free solder until it melts sufficiently.

Recommendations

Recommended lead free solder composition is Sn96.5 Ag3.0 Cu0.5.

This manual downloaded from http://www.manualowl.com

4 Specifications

ITEM		SPECIFICATION	1	2	3	4	5
Power Source		AC 120 V, 60 Hz	○	○	○	○	○
Power Consumption		Power ON: Approx. 190 W (When audio is at maximum) Power OFF: Approx. 0.4 W (When cooling fan is stopped)	○	○	○	○	○
LCD panels		0.7″ Poly silicon TFT LCD panel × 3 921 600 (1 280 × 720) stripe pixels × 3 panels (16:9)	○	○	○	○	○
Display		52-inch, 16 : 9 aspect ratio	○	–	–	○	–
		56-inch, 16 : 9 aspect ratio	–	○	–	–	○
		61-inch, 16 : 9 aspect ratio	–	–	○	–	–
Speaker		2 Speakers 20 W [10 W + 10 W] (10 % THD)	○	○	○	○	○
HID Lamp		100 W HID (High Intensity Discharge) Lamp	○	○	○	○	○
Channel Capability (Digital/Analog)		VHF/UHF 2-69 Cable 1-135	○	○	○	○	○
Input Terminals	PC INPUT	RGB analog 0.7 Vp-p (75 Ω) (D-SUB 15P) AUDIO 0.5 Vrms (M3 Stereo mini Pin Jack)	○	○	○	○	○
	AV INPUT 1-3	VIDEO 1.0 Vp-p (75 Ω) (RCA Pin Jack) S-VIDEO Y: 1 Vp-p (75 Ω), C: 0.286 Vp-p (75 Ω) (Mini DIN 4 pin) AUDIO L-R 0.5 Vrms (RCA Pin Jack × 2)	○	○	○	○	○
	COMPONENT VIDEO INPUT 1-2	Y 1.0 Vp-p (with sync) (75 Ω) (Pin Jack) P_B / P_R ± 0.35 Vp-p (75 Ω) (Pin Jack × 2) AUDIO L-R 0.5 Vrms (RCA Pin Jack × 2)	○	○	○	○	○
	HDMI	HDMI type A Connector AUDIO L-R 0.5 Vrms (RCA Pin Jack Type × 2)	○	○	○	–	–
	HDMI 1-2	HDMI type A Connector AUDIO L-R 0.5 Vrms (RCA Pin Jack Type × 2)	–	–	–	○	○
SD Card slot		SD Card (8 MB/ 16 MB/ 32 MB/ 64 MB/ 128 MB/ 256 MB/ 512 MB/ 1 GB/ 2 GB (Maximum))	○	○	○	○	○
Output signals (AV OUT)		VIDEO 1.0 Vp-p (75 Ω) (RCA Pin Jack) AUDIO L-R 0.5 Vrms (RCA Pin Jack × 2)	○	○	○	○	○
Dimensions (W × H × D)		1 232 mm (W) × 867 mm (H) × 420 mm (D) 48-1/2″ (W) × 34-1/8″ (H) × 16-9/16″ (D)	○	–	–	○	–
		1 321 mm (W) × 925 mm (H) × 446 mm (D) 52″ (W) × 36-7/16″ (H) × 17-9/16″ (D)	–	○	–	–	○
		1 431 mm (W) × 999 mm (H) × 479 mm (D) 56-5/16″ (W) × 39-5/16″ (H) × 18-7/8″ (D)	–	–	○	–	–
Weight (Mass)		31 kg (68 lbs.) Net	○	–	–	○	–
		33 kg (73 lbs.) Net	–	○	–	–	○
		35 kg (77 lbs.) Net	–	–	○	–	–
Operating conditions		Temperature : 0 °C – 35 °C (32 °F - 95 °F) Humidity : 20 % – 80 % (non-condensing)	○	○	○	○	○
Solder		**This model uses lead free solder (PbF).**	○	○	○	○	○

1. PT-52LCX66
2. PT-56LCX66
3. PT-61LCX66
4. PT-52LCX16
5. PT-56LCX16

Design and Specifications are subject to change without notice.
Weight and Dimensions shown are approximate.

This manual downloaded from http://www.manualowl.com

5 Location of Controls and Components

5.1. Operation Instructions

Location of Controls

Illuminated Remote Control

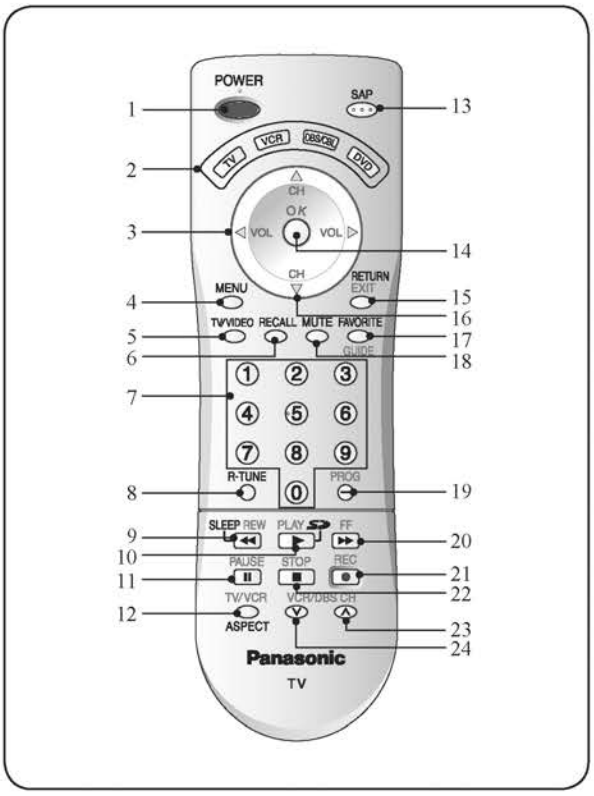

1	**POWER**	Press to turn ON and OFF.
2	**TV**	Sets the remote to control television or digital television.
	VCR, DBS/CBL, DVD	Sets the remote to control other devices.
3	**VOL -+ / ◄►**	Press to adjust TV sound and to navigate menus.
4	**MENU**	Press to display Main Menu.
5	**TV/VIDEO**	Changes Input source.
6	**RECALL**	Press to display or delete Channel banner.
7	**NUMBER**	Press numeric keypad to select any channel or to make alpha-numeric entries in menus.
8	**R-TUNE**	Press to switch to previously viewed channel or input modes.
9	**SLEEP**	Sets unit to shut itself off after a preselected amount of time.
	REW	While remote is in VCR or DVD mode, press to rewind.
10	**PLAY**	While remote is in VCR or DVD mode, press to play.
	SD	Accesses the Photo Viewer feature.
11	**PAUSE**	While remote is in VCR or DVD mode, press to pause.
12	**TV/VCR**	Press to switch to TV or VCR.
	ASPECT	Changes display aspect ratio.
13	**SAP**	In analog mode, press to access audio modes (Stereo, SAP or Mono). In digital mode, press to access next audio track.
14	**OK**	Press to select menu and sub-menu items.
15	**RETURN**	Press to return one step backward in menus.
	EXIT	Press to exit menus.
16	**CH ▲▼**	Press to change channels and to navigate menus.
17	**FAVORITE**	Press to operate the Favorite channel list function.
18	**MUTE**	Press to mute sound.
19	**PROG**	Press after entering a digital channel to enter a sub-channel.
20	**FF**	While remote is in VCR or DVD mode, press to fast forward.
21	**REC**	While remote is in VCR mode, press to record.
22	**STOP**	While remote is in VCR or DVD mode, press to stop.
23	**VCR/DBS CH ^**	While remote is in VCR or DBS mode, press to change VCR or DBS channels.
24	**VCR/DBS CH v**	

This manual downloaded from http://www.manualowl.com

Location of Controls (continued)

Controls and Terminals on the Projection Display

Front View <Model PT-56LCX16 unit shown>

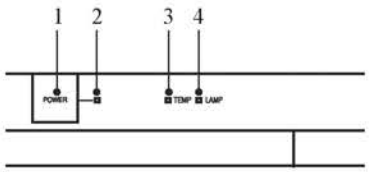

1	**POWER button**	Press to turn ON and OFF. (p. 63, 66)
2	**POWER indicator**	Lights up green when power is ON. (p. 24, 63)
3	**TEMP indicator**	Flashes when unit internal temperature is abnormal. (p. 63)
4	**LAMP indicator**	Lights up or flashes when the lamp unit is malfunctioning. (p. 63)

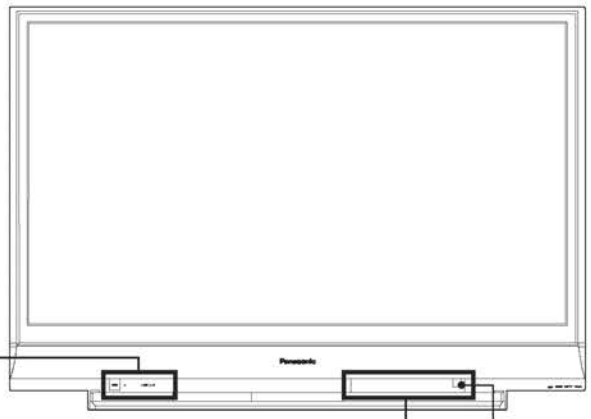

Open Door:
Press position ❶, and slide Door open as shown by arrow.

Close Door:
Press position ❷, and slide Door closed as shown by arrow.

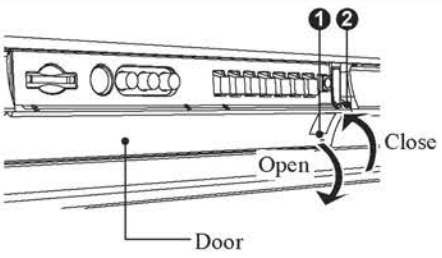

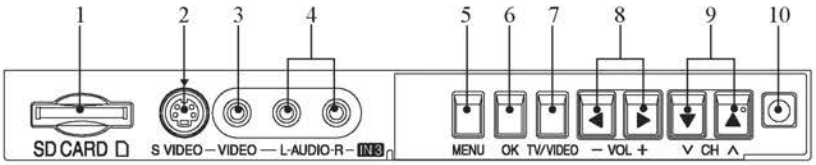

1	**SD CARD Slot**	Insert SD Card.
2	**S-Video Input Connector 3**	Connect from other component. (Video 3)
3	**Video Input Connector 3**	Connect from other component. (Video 3)
4	**Audio Input Connector 3**	Connect from other component. (Video 3)
5	**MENU***	Press to display Main Menu.

6	**OK***	Press to select menu and sub-menu items.
7	**TV/VIDEO***	Changes Input source.
8	**VOL -+ / ◄►***	Press to adjust TV sound and to navigate menus.
9	**CH ∨∧ / ▼▲***	Press to change channels and to navigate menus.
10	**Remote Control Sensor**	Receives infrared signal from Remote Control.

* Buttons listed above operate the same as Remote Control buttons of the same name.

For assistance, please call : 1-888-VIEW PTV(843-9788) or, contact us via the web at: http://www.panasonic.com/contactinfo

This manual downloaded from http://www.manualowl.com

Rear View <Model PT-56LCX16 unit shown>

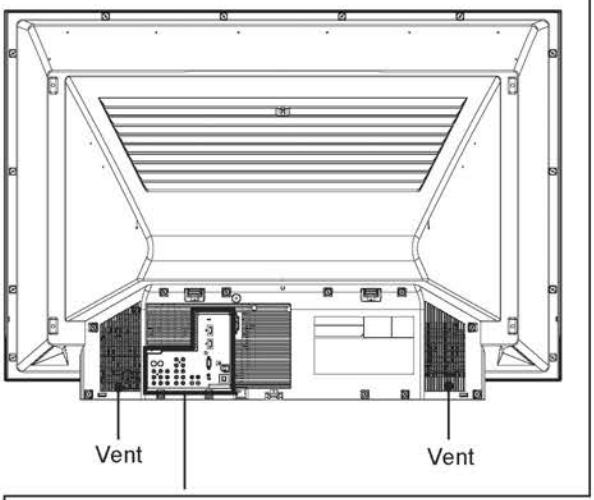

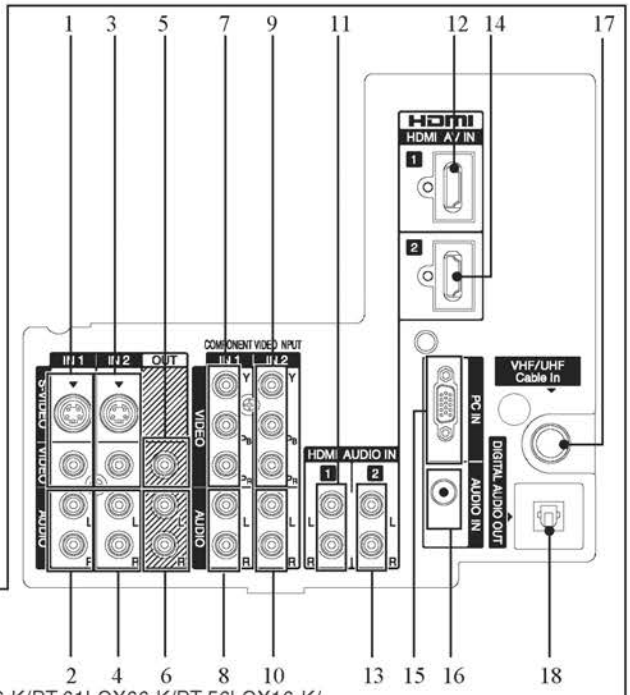

For models PT-52LCX66-K/PT-61LCX66-K/PT-56LCX16-K/

1	**S-Video/Video Input Connector 1**	Connect from other component. (Video 1)
2	**Audio Input Connector 1**	Connect from other component. (Video 1)
3	**S-Video/Video Input Connector 2**	Connect from other component. (Video 2)
4	**Audio Input Connector 2**	Connect from other component. (Video 2)
5	**Video Out Connector**	Output video signal.
6	**Audio Out Connector**	Output audio signal. (Analog)
7	**Component Video Input Connector 1**	Connect from other component. (Component 1)
8	**Audio Input Connector 1**	Connect from other component. (Component 1)
9	**Component Video Input Connector 2**	Connect from other component. (Component 2)

10	**Audio Input Connector 2**		Connect from other component. (Component 2)
11	**HDMI Input Terminal 1**	**Audio 1**	Connect from other component. (HDMI 1)
12		**Audio/ Video 1**	Connect from other component. (HDMI 1)
13	**HDMI Input Terminal 2***	**Audio 2**	Connect from other component. (HDMI 2)
14		**Audio/ Video 2**	Connect from other component. (HDMI 2)
15	**PC (RGB) Input Connector**		Connect from PC. (PC)
16	**Audio Input Connector**		Connect from PC. (PC)
17	**VHF/UHF Cable In**		Input terminal for an antenna or cable box signal.
18	**DIGITAL AUDIO OUT**		Output audio signal (Digital)

* For models PT-52LCX16/PT-56LCX16
* For models PT-52LCX66-K/PT-61LCX66-K/PT-56LCX16-K

Notes:

- Make sure the vents are not blocked. (This could cause damage.)
- Indication on the back panel may change without notice.

This manual downloaded from http://www.manualowl.com

5.2. Replacement of Lamp

Lamp Replacement - For models PT-52LCX66/PT-56LCX66/PT-61LCX66/PT-52LCX16/PT-56LCX16/PT-61LCX16

CAUTION:
Because of the possibility of injury, strictly follow the replacement procedure below.

This product has a High Intensity Discharge (HID) lamp that contains a small amount of mercury. Disposal of these materials may be regulated in your community due to environmental considerations. For disposal or recycling information please contact your local authorities, or the Electronics Industries Alliance: <http://www.eiae.org.>

Lamp replacement procedure

1 **Turn power off, wait until power indicator stops blinking red, then unplug the power cord from the wall outlet and confirm that the area around the lamp unit has cooled down.**

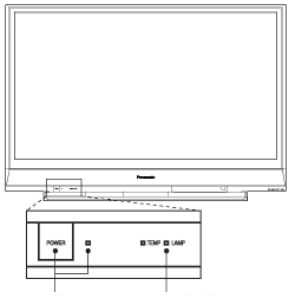

Please wait more than one hour for lamp replacement.
[If you need to replace the lamp more urgently]
- The projection display has a forced cooling feature. After the POWER button is turned OFF, and during the first minute of the normal cooling fan operation, press the VOL+ button on the projection display and ▲button on the remote control at same time for more than 5 seconds. The cooling fan operates for about 10 minutes. The LAMP indicator flashes red 5 times every 5 seconds.

Note:
Remove Front Cover after Front Door is opened.

2 **Pull on both ends of the Front Cover ❶ with your fingertips to remove it.**

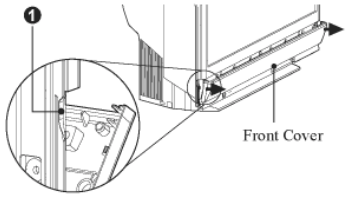

3 **(1) Turn the Lamp Cover Lock/Open Knob to the left.**
(2) Pull the Lamp Cover out and down to open it.

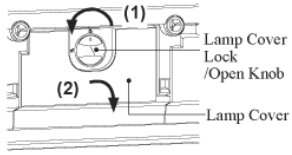

4 **(1) Turn the Lamp Unit Lock/Open Knob to the left.**
(2) Grasp the Lamp Unit Lock/Open Knob and slowly remove the Lamp Unit as shown.

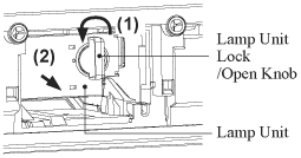

⚠ CAUTION
- The lamp unit is hot right after use and may cause burns if touched.
- Please allow the lamp unit to cool before handling or replacing it.

5 **(1) Insert the new Lamp Unit being careful of the insertion direction.**
- Press on the arrow mark to confirm proper insertion.

(2) Turn the Lamp Unit Lock/Open Knob to the right until it clicks.

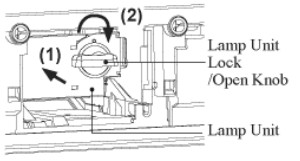

- Properly dispose of the old lamp. Please see the operating instructions for the projection display.
- Secure the lamp unit and lamp unit housing door. If they are not secured, a protective circuit will not allow the lamp to turn on.
- At this point, confirm that the lamp unit will not come out by pulling on the Lock/Open Knob.

6 **(1) Close the Lamp Cover.**
(2) Turn the Lamp Cover Lock/Open Knob to the right.

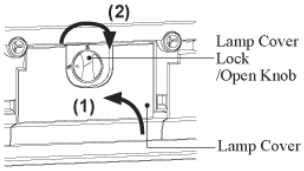

7 **Be sure that the Hook on the Front Cover is securely fastened to the unit as shown.**

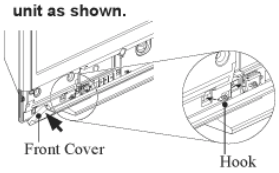

After lamp replacement, follow the procedure below

Warning:
Perform lamp time reset only when the lamp has been replaced.

Lamp time reset procedure

1 Be sure the power cord is plugged into a properly grounded wall outlet.
Then, press the POWER button on the projection display or the remote control to turn the unit on.

2 While pressing the VOL- button on the projection display, hold down the 0 button on the remote control at same time for more than 5 seconds.

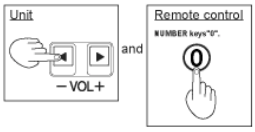

3 When reset procedure is complete, the following screen will appear.

- This screen may be different from the actual screen.

When lamp time reset is finished, the LAMP indicator goes out.

Printed in Japan
LSQC0459 A

This manual downloaded from http://www.manualowl.com

6 Service Mode

LED INDICATIONS FOR ERROR CONDITIONS

Each LED indication facilitates finding the cause of an error.
When an error is detected, the Lamp goes off and the LEDs on the front flash.

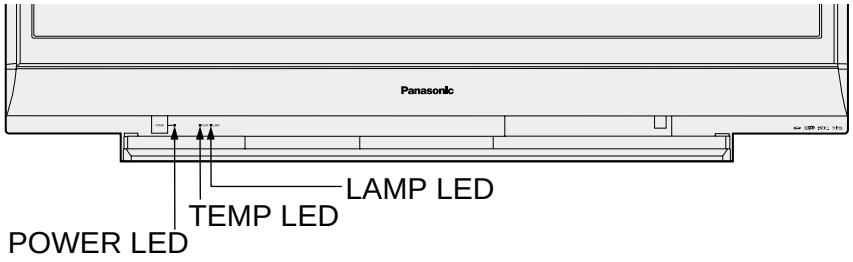

				(Note 4)	(Note 1, 2)	(Note 3)	
Error No.	Error Information	POWER LED flashes orange	TEMP LED flashes red	LAMP LED flashes red	SOS	LAMP OFF	RESET
1)	SOS2 (Over voltage/current)	1	-	-	H10SOS2	○	Power ON/OFF
2)	Fan 1, Fan 2 or Fan 3 stops	2	-	-	H20FANST	○	AC ON/OFF
3)	Abnormal voltage (DT+5V line)	3	-	-	H30DT9V	○	Power ON/OFF
4)	IC5001 (GC4Pro) communication error	5	-	-	H50GC4PR	○	AC ON/OFF
5)	Temperature Sensor shorted or open (Thermistor 2 P.C.B.)	-	2	-	-	○	Power ON/OFF
6)	Abnormal temperature (Thermistor 2 P.C.B.)	-	3	-	-	○	
7)	Clogged Air Filter	-	6	-	-	○	Clean Air Filter
8)	Abnormal Lamp	-	-	1	-	○	Power ON/OFF
9)	Iris Mechanism hardware error	-	-	2	-	-	
10)	Iris calibration error	-	-	3	-	-	
11)	Lamp Cover open	7	-	-	(H70LAMCV)	○	
12)	Abnormal voltage (+17V, +9V, +5V line) for LCD Drive P.C.B.	8	-	-	(H80LCDDV)	○	

Note:

1. The detected SOS Error 1) 2) 3) 4) 11) 12) data will be stored in the EEPROM.
2. SOS (Error) information is displayed in Service Mode (4/4).
3. LAMP OFF: The LED will flash immediately after the Lamp goes off.
4. **In case of Error 9) or 10), the unit will not shut off and Dynamic Iris setting in Adv. adjust of Picture Menu will be changed to "OFF" automatically. When the unit is turned off and turned back on, Dynamic Iris "OFF" setting remains. Lamp LED will not flash as long as Dynamic Iris setting in Adv. adjust of Picture Menu is set to "ON" manually.**

This manual downloaded from http://www.manualowl.com

MAIN PARTS LOCATION

<Front View>

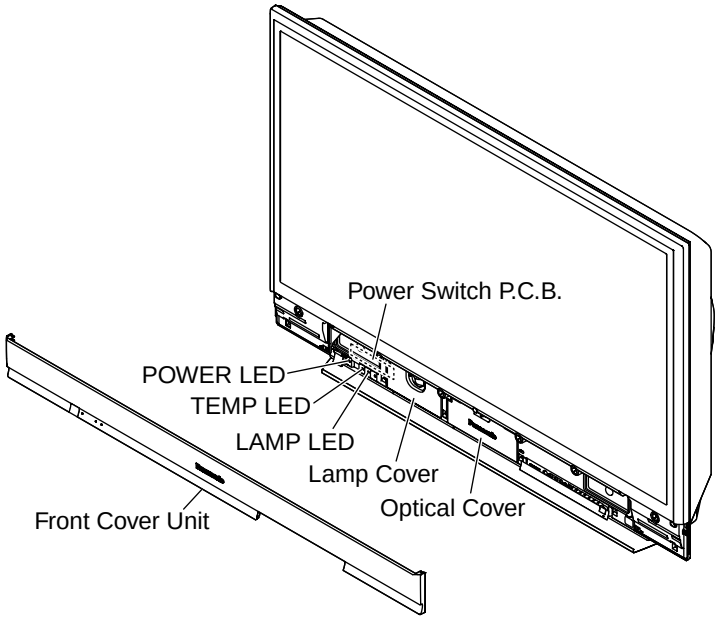

<Rear View>

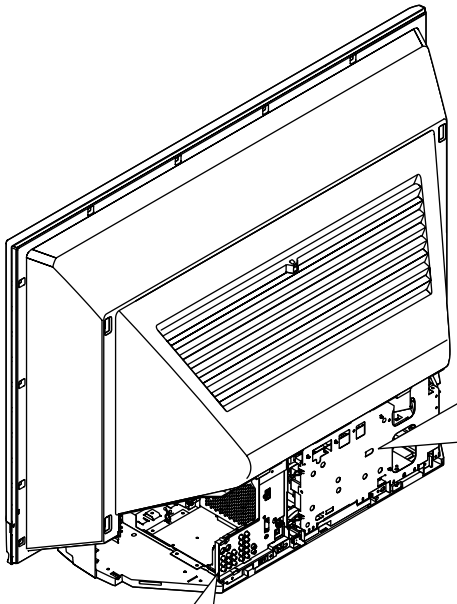

Projection Unit & Top Duct 3

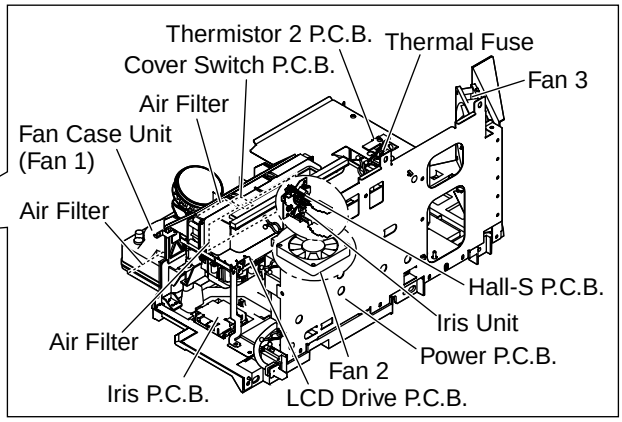

Note: There is not the Thermistor 1 P.C.B. in this unit.

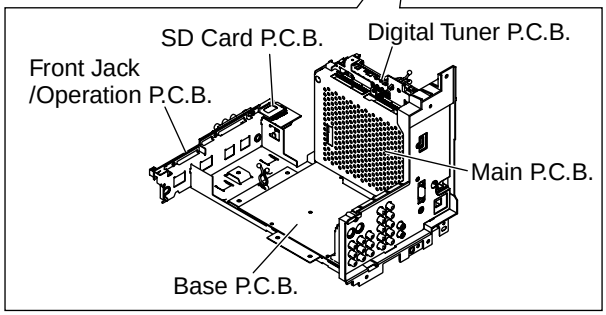

TV Unit & Digital Tuner P.C.B.

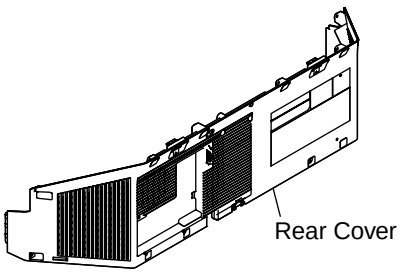

This manual downloaded from http://www.manualowl.com

TO DISTINGUISH THE PROJECTION UNIT

The only difference between the 52/56 inch model and 61 inch model of the Projection Unit is the LCD Drive P.C.B. Therefore, see the stamp on the Lamp Wall to differentiate. Also, the Focus Adjustment should be performed to match each size of model after replacing the new Projection Unit or the new Base Body Unit.

Note:
The Base Body Unit includes the Projection Unit.

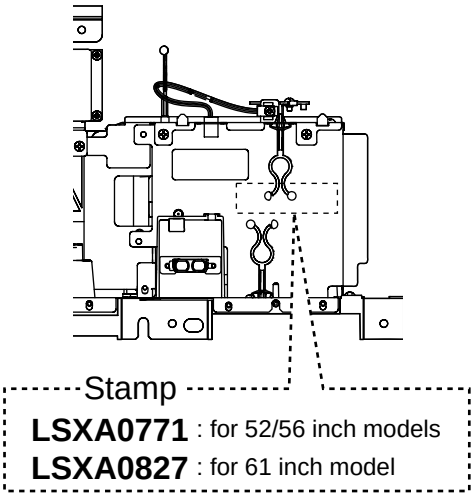

BEFORE REMOVING THE PROJECTION UNIT FROM THE UNIT AT THE USER'S LOCATION

When removing the Projection Unit, remove the Lamp Unit and the Top Duct 3 Unit from the Projection Unit and keep them. Then, reinstall this Lamp Unit and the Top Duct 3 Unit into the new Projection Unit.

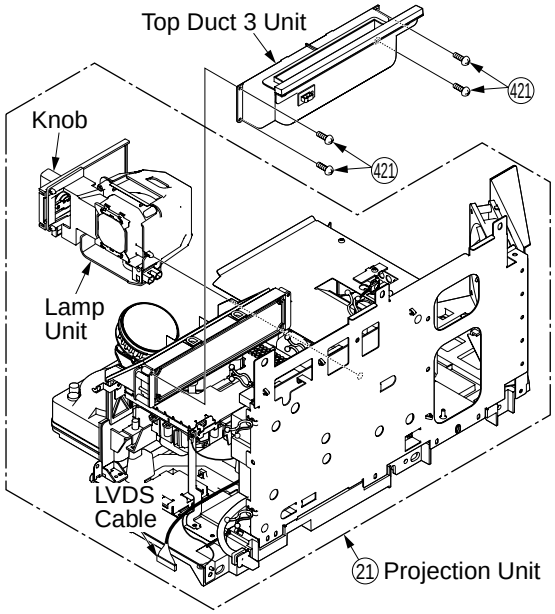

TO READ THE DIGITAL TUNER (PEAKS) SOFTWARE VERSION AND TV MICROCONTROLLER SOFTWARE VERSION

1. Press MENU key with the power on.
2. Press CH UP/DOWN key and select "Setup." Then press OK key.
3. Press CH UP/DOWN key and select "About." Then press OK key.
4. Select "Version" and press OK key. Version menu will appear as shown below. Starting with the second digit from the right or from the left.

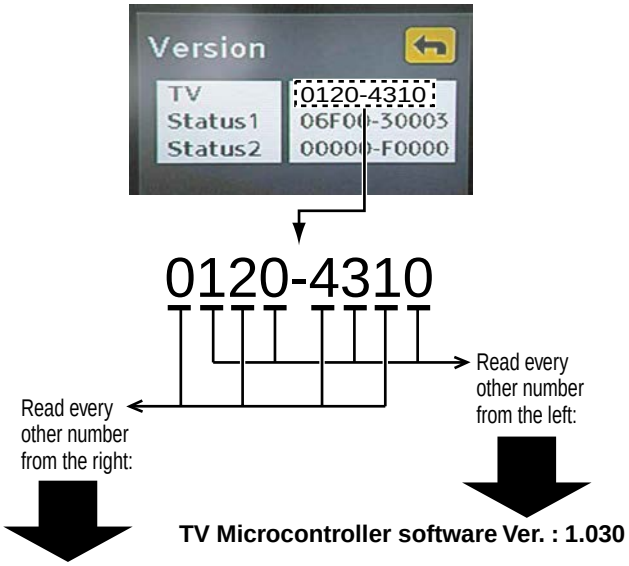

This manual downloaded from http://www.manualowl.com

RESET USER'S MEMORY FUNCTIONS

Be sure to reset the user's memory:
- After replacing the Digital Tuner P.C.B.
- If the secret code for V-chip has been forgotten.
- When moving the unit to a new location.
- When resetting SOS (Error) number records.

1. Turn on the power.
2. Press and hold the VOLUME DOWN button on the unit and the OK key on the remote for more than 3 seconds. When reset is finished, power shuts off automatically (the user's memory is reset).

CLOGGED AIR FILTER DETECTION

When a dirty or clogged air filter is detected, the OSD display appears for 1 minute. And then the Lamp is turned OFF.
When this OSD display appears, remove the Projection Unit from rear, and clean the air filters gently on the Projection Unit.

AIR FILTER CLEANING IS RECOMMANDED AT THIS TIME. FIRST TURN THE UNIT OFF.
PLEASE CALL FOR SERVICE.

UNIT WILL BE TURNED OFF AFTER 1 MINUTE.

DO NOT UNPLUG AC CORD DURING COOLING OPERATION

The lamp cooling fan will continue to operate for approximately 1 minute after the power is turned off.
At the same time, the POWER LED will flash red.
Do not disconnect the AC Cord from the power outlet and do not open any circuit breakers while the cooling fan is still operating.

HOT CIRCUIT

Primary circuit exists on the Power P.C.B.
This circuit is identified as "**HOT**" on the P.C.B. and in the Service Manual. Use extreme care to prevent accidental shock when servicing.

MODEL NO. IDENTIFICATION MARK

Use Marks shown in the chart below to distinguish the different models included in this Service Manual.

MODEL	MARK
PT-52LCX66	A
PT-56LCX66	B
PT-61LCX66	C
PT-52LCX16	D
PT-56LCX16	E
NOT USED	PT

Note:
Refer to Item 3 of Schematic Diagram Notes of Schematic Diagram and Circuit Board Layout Notes, for mark "PT."

This manual downloaded from http://www.manualowl.com

BEFORE REMOVING THE MAIN P.C.B. OR THE TV UNIT FROM THE UNIT AT THE USE'S LOCATION

Note:
The TV Unit includes the Main P.C.B.

CAUTION:
1. **Be sure to make a note of the CURRENT LAMP value (value A) in Service Mode (1/4):**

```
SERVICE Mode              1/4

 LAMP OPERATION TIME

  CURRENT LAMP:   2000h ←Value A
 OSD DISP      :      ON   (Changeable)
 LON COUNT     :     153
 BKSV:   4B 7E 3D CA FB
```

<Service Mode (1/4)>
Fig. 2

LAMP OPERATION TIME is stored in EEPROM on the Main P.C.B. Therefore, before removing the Main P.C.B. or the TV Unit at the user's location, make a note of the CURRENT LAMP value (value A) in Service Mode (1/4). Then, after installing the new Main P.C.B. or the TV Unit at the user's location, set the CURRENT LAMP value to the original value (value A) in Service Mode.
Otherwise, OSD and LED Lamp replacement indications will be displayed at the wrong time.

Note:
In case it is impossible to make a note of the CURRENT LAMP value because of a defective Main P.C.B., ask the customer their daily average use and the approximate age of the current Lamp. Then, calculate the CURRENT LAMP value as follows and make a note.

Daily average use (hours)	X	Approx. age (days)	=	**CURRENT LAMP** (hours)

Note:
The TOTAL value can be set to the original value in Service Mode (2/4) by similar method:
Before removing the Main P.C.B. at the user's location, make a note of the TOTAL value in Service Mode (2/4). Then, after installing the new Main P.C.B. at the user's location, set the TOTAL value to the original value in Service Mode.

WHEN REINSTALLING THE MAIN P.C.B. OR THE TV UNIT FROM THE UNIT AT THE USE'S LOCATION

CAUTION:
1. Set CURRENT LAMP value to original value as follows.
   1) Select CURRENT LAMP in Service Mode (1/4).
   2) Press the VOLUME UP/DOWN key on the remote to change to the original value (value A) that was noted before removing the Main P.C.B. or the TV Unit at the user's location.

```
SERVICE Mode              1/4

 LAMP OPERATION TIME

  CURRENT LAMP:   2000h ←Value A
 OSD DISP      :      ON   (Changeable)
 LON COUNT     :     153
 BKSV:   48 BF 9D 72 B5
```

<Service Mode (1/4)>
Fig. 3

Service Mode Map

Enter:
VOLUME DOWN button + TV/VIDEO key
(on the front) (on the remote)
(for more than 5 seconds in power off condition)

Power ON

```
SERVICE Mode          1/4

 LAMP OPERATION TIME

  CURRENT LAMP:   2000h
 OSD DISP      :      ON
 LON COUNT     :     153
 BKSV:   B0 3A 59 CD 66 ←BKSV number
```

< Service Mode (1/4) >

CH DOWN key ↓ ↑ CH UP key

```
SERVICE Mode          2/4
                IR:1 UNIT:1
 IC2301:1 3101:1 4002:1
   4504:1 5000:1 5001:1
   5801:1 6000:1 9502:1

  TOTAL         : 12345h
 TU8200:1
                E:06030301
 IC6001        V:0005024
```

< Service Mode (2/4) >

CH DOWN key ↓ ↑ CH UP key

```
SERVICE Mode          3/4
 IC6001 PORT
P0:10101010   P8:---10110
P1:-1111100   P9:--111111
P2:00000000   PA:00000000
P3:00000000   PB:11111110
P4:--111110   PC:11111100
P5:10110101   PD:-----111
P6:01011001   PE:11000000
P7:10101001   PF:----0011
```

< Service Mode (3/4) >

CH DOWN key ↓ ↑ CH UP key

```
SERVICE Mode          4/4
-SOS-
 LAST SOS     H10SAFE 01
 SAFE 10.40.50.50.40
 H10SOS2 :01 H20FANST:00
 H30DT5V :00 H40ACLST:00
 H50GC4PR:01
```

< Service Mode (4/4) >

CH DOWN key

Exit:
Power OFF.

This manual downloaded from http://www.manualowl.com

WIRE AND LEAD POSITION DIAGRAM OF THE UNIT

After servicing, make sure that all wires, leads, and clampers are placed in their original position. It is important for the best operation of the unit.
Note: Use extreme care especially for the following.

Fig. 9-1

This manual downloaded from http://www.manualowl.com

After servicing, make sure that all wires, leads, and clampers are placed in their original position. It is important for the best operation of the unit.
Note: Use extreme care especially for the following.

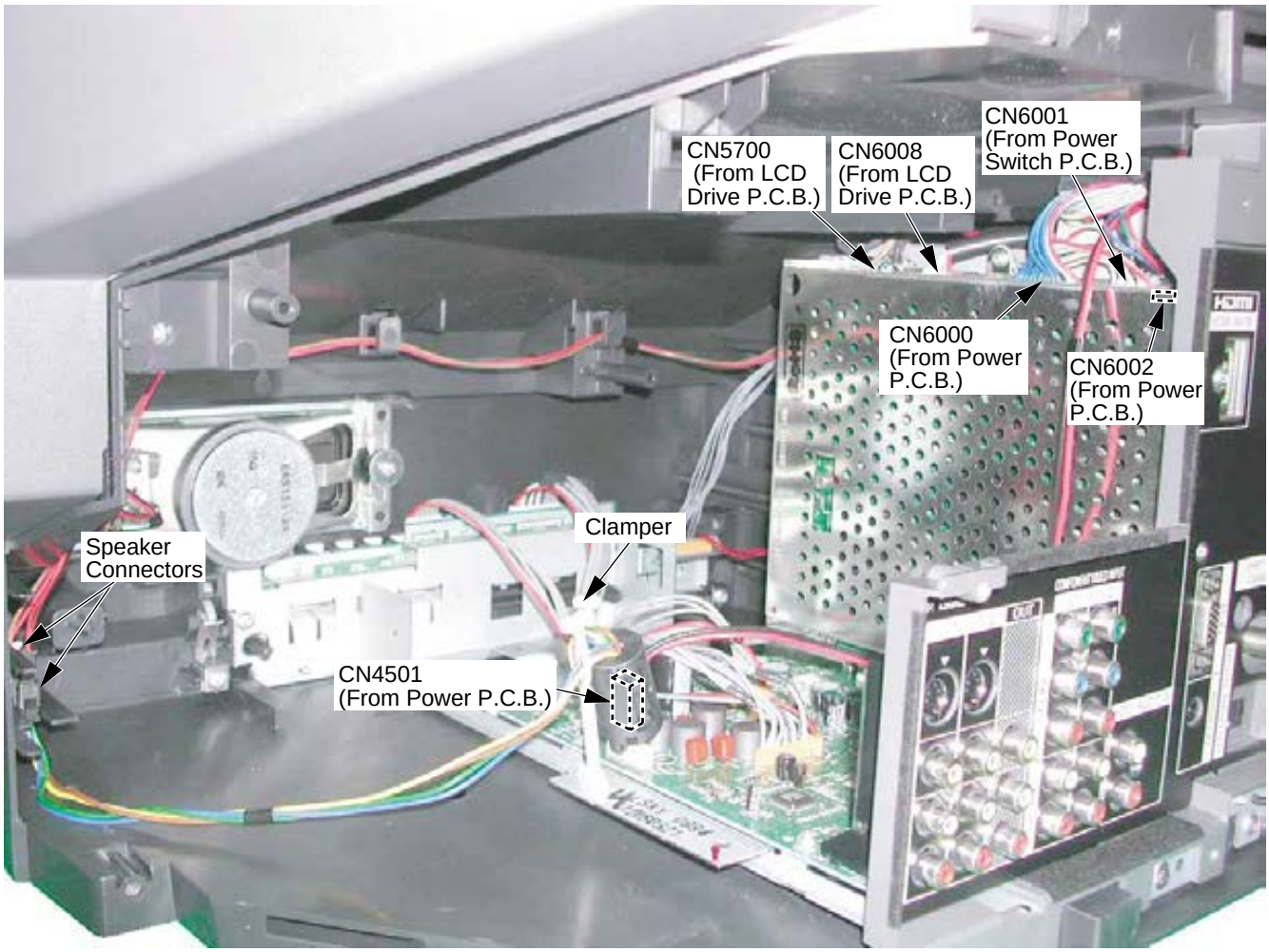

Fig. 9-2

This manual downloaded from http://www.manualowl.com

After servicing, make sure that all wires, leads, and clampers are placed in their original position. It is important for the best operation of the unit.

Note: Use extreme care especially for the following.

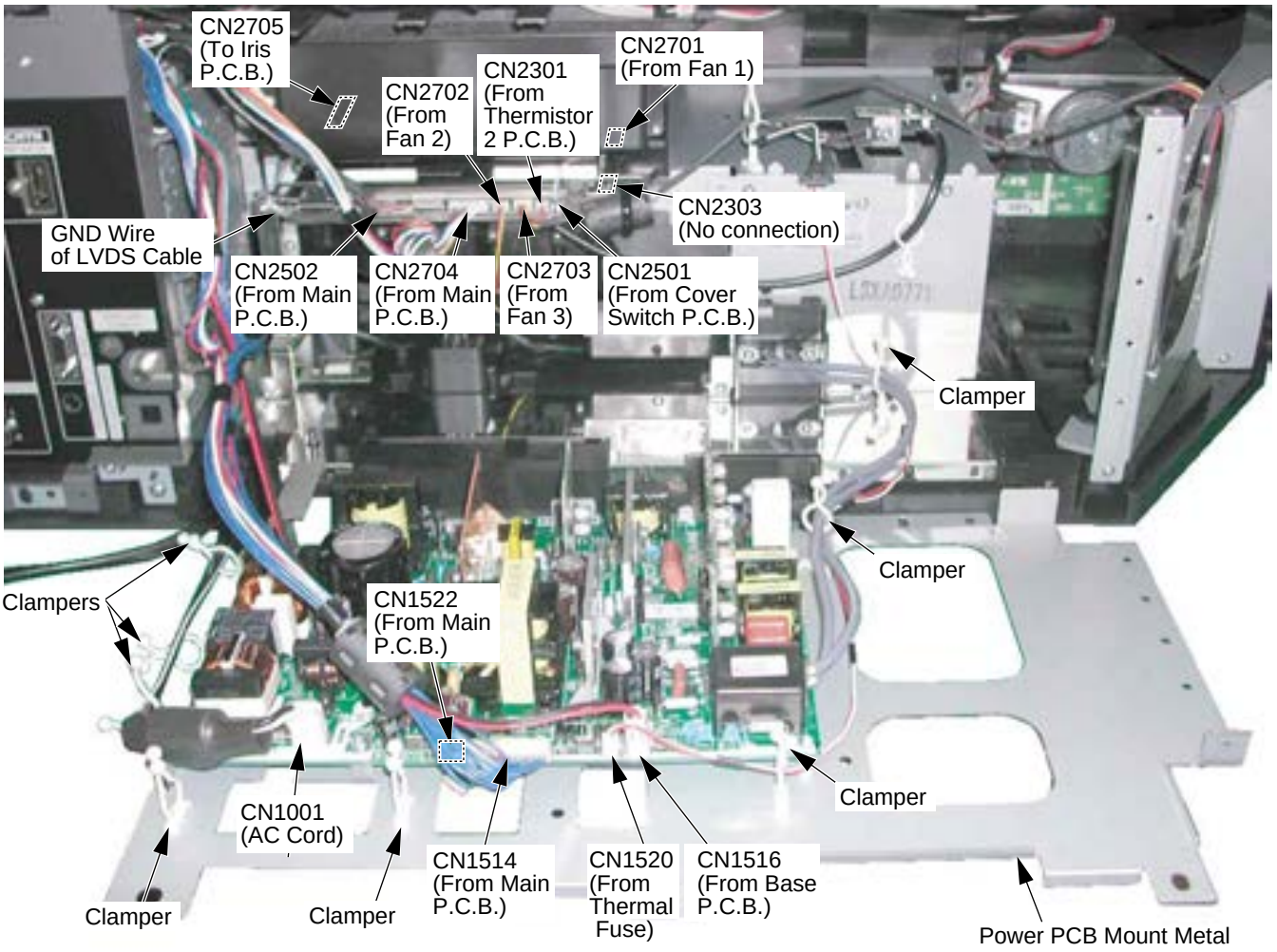

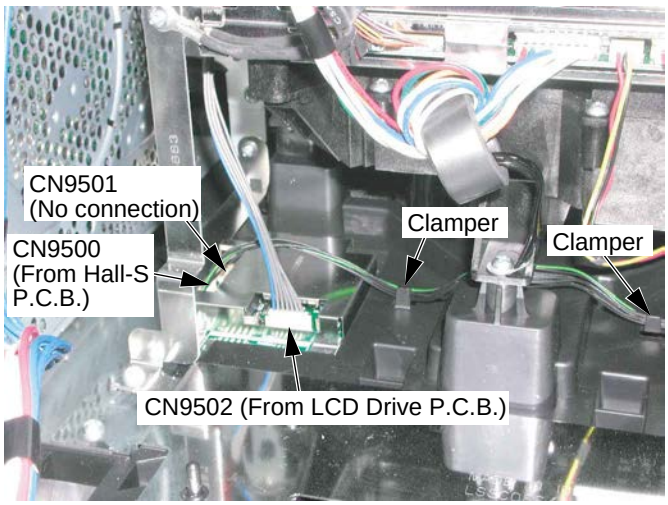

Fig. 9-3

This manual downloaded from http://www.manualowl.com

After servicing, make sure that all wires, leads, and clampers are placed in their original position. It is important for the best operation of the unit.
Note: Use extreme care especially for the following.

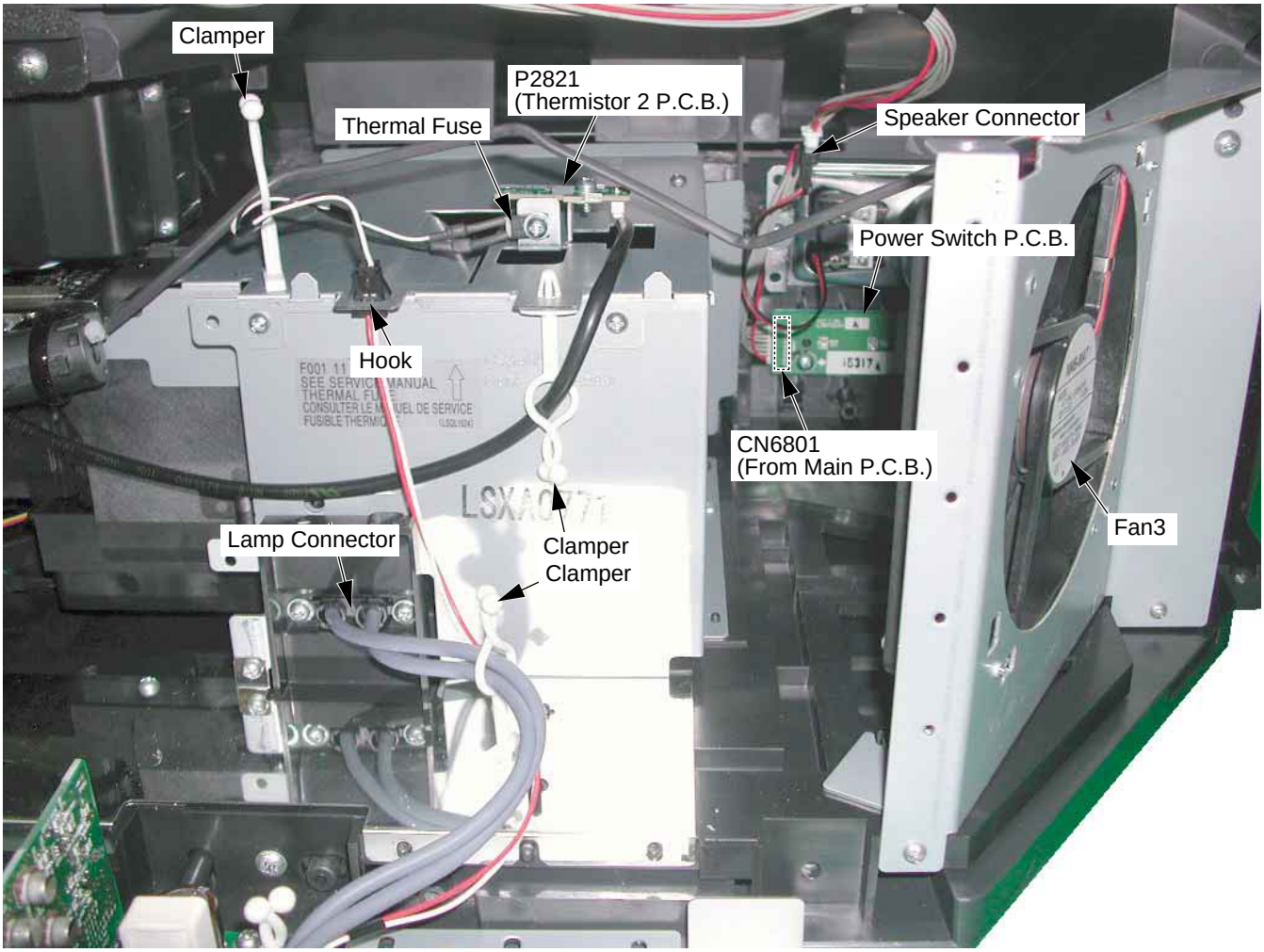

Fig. 9-4

This manual downloaded from http://www.manualowl.com

After servicing, make sure that all wires, leads, and clampers are placed in their original position. It is important for the best operation of the unit.
Note: Use extreme care especially for the following.

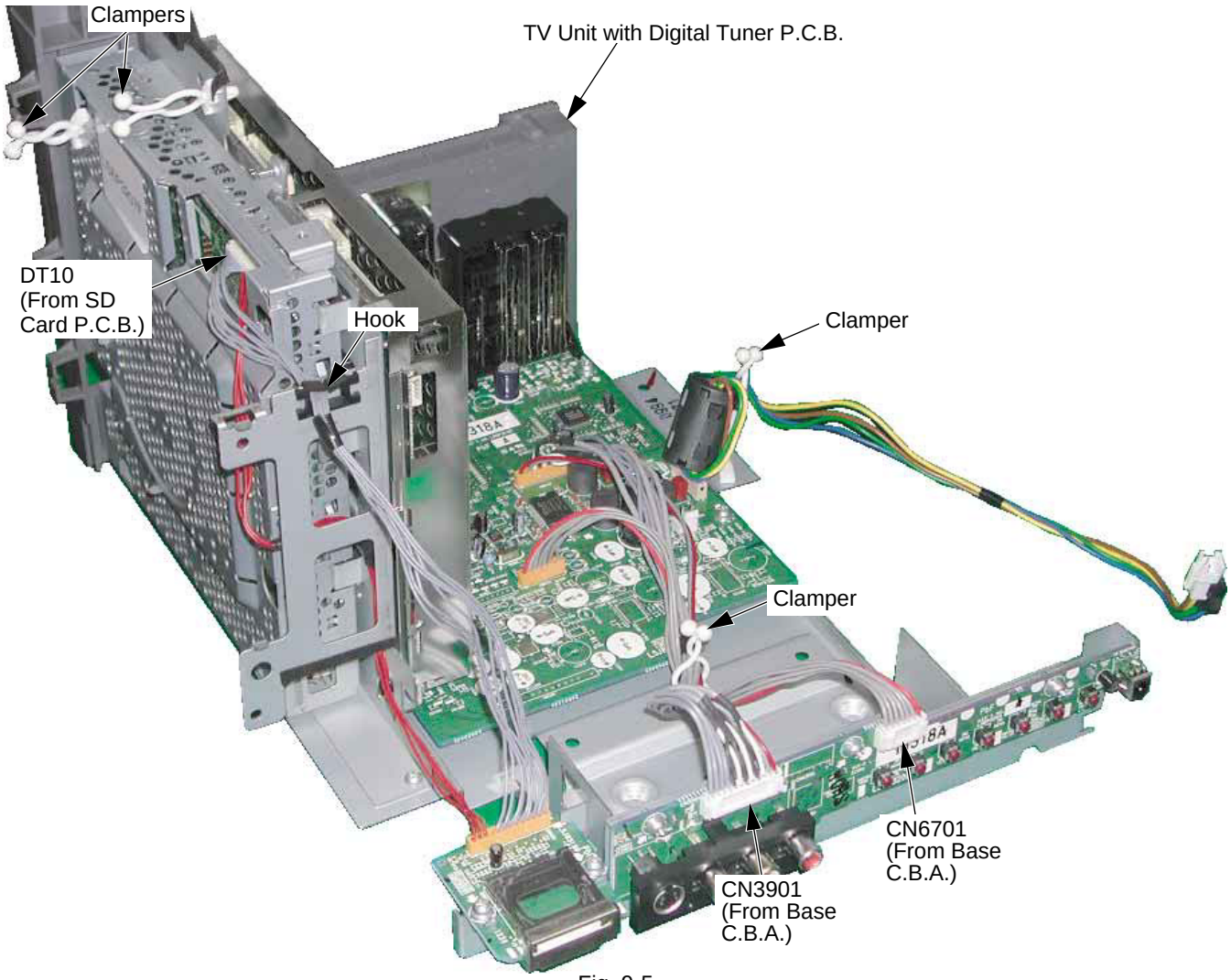

Fig. 9-5

This manual downloaded from http://www.manualowl.com

7 Troubleshooting Guide

7.1. Troubleshooting Hints for Block Level Repair

MAIN PARTS LOCATION

<Front View>

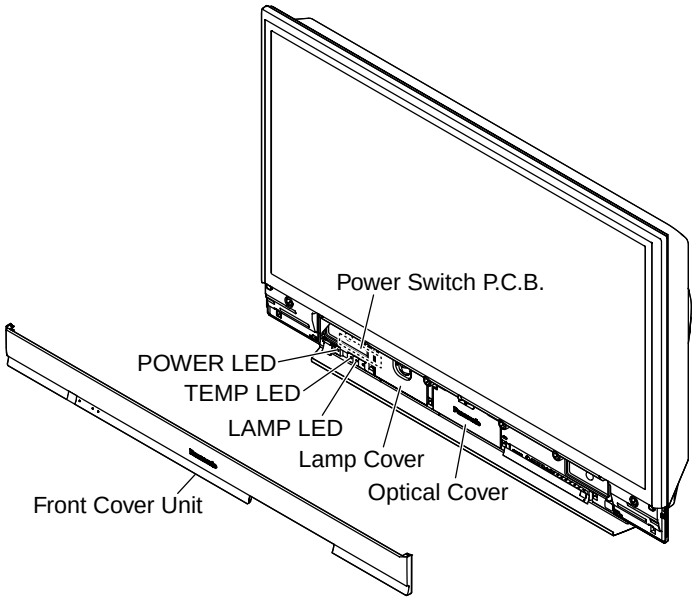

<Rear View>

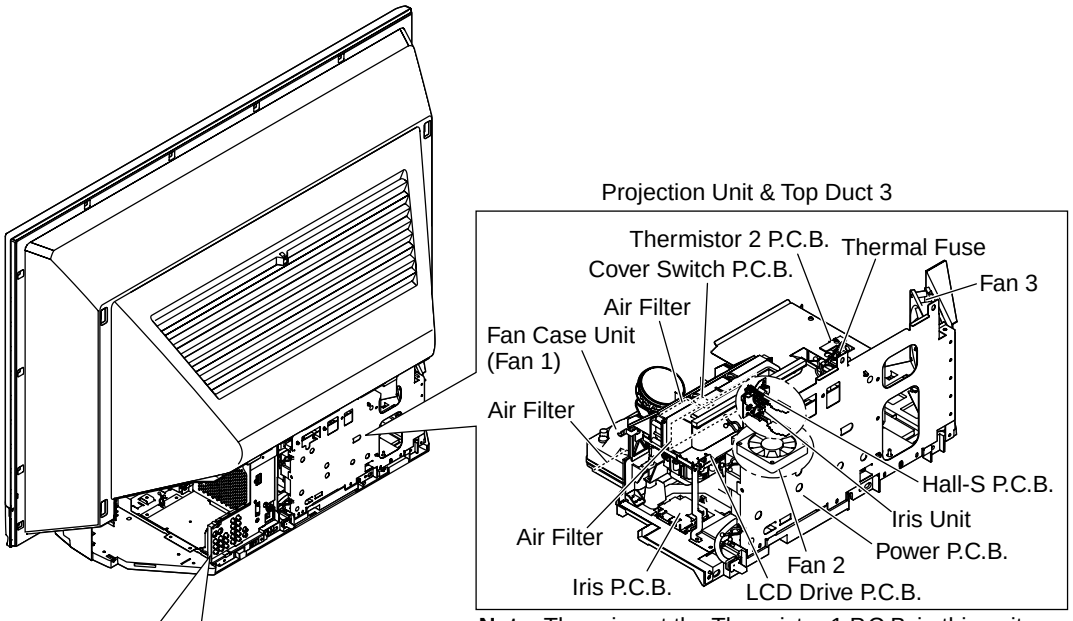

Note: There is not the Thermistor 1 P.C.B. in this unit.

This manual downloaded from http://www.manualowl.com

LED INDICATIONS FOR ERROR CONDITIONS

Each LED indication facilitates finding the cause of an error.
When an error is detected, the Lamp goes off and the LEDs on the front flash.

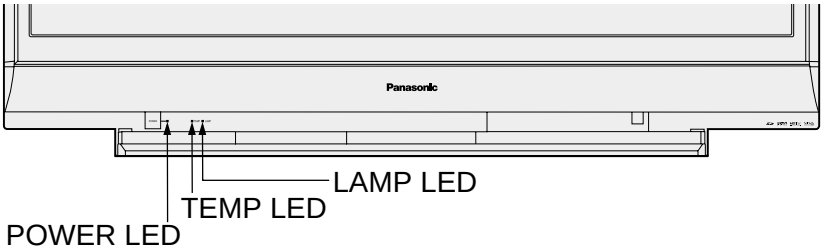

				(Note 4)	(Note 1, 2)	(Note 3)	
Error No.	Error Information	POWER LED flashes orange	TEMP LED flashes red	LAMP LED flashes red	SOS	LAMP OFF	RESET
1)	SOS2 (Over voltage/current)	1	-	-	H10SOS2	◯	Power ON/OFF
2)	Fan 1, Fan 2 or Fan 3 stops	2	-	-	H20FANST	◯	AC ON/OFF
3)	Abnormal voltage (DT+5V line)	3	-	-	H30DT9V	◯	Power ON/OFF
4)	IC5001 (GC4Pro) communication error	5	-	-	H50GC4PR	◯	AC ON/OFF
5)	Temperature Sensor shorted or open (Thermistor 2 P.C.B.)	-	2	-	-	◯	Power ON/OFF
6)	Abnormal temperature (Thermistor 2 P.C.B.)	-	3	-	-	◯	
7)	Clogged Air Filter	-	6	-	-	◯	Clean Air Filter
8)	Abnormal Lamp	-	-	1	-	◯	Power ON/OFF
9)	Iris Mechanism hardware error	-	-	2	-	-	
10)	Iris calibration error	-	-	3	-	-	
11)	Lamp Cover open	7	-	-	(H70LAMCV)	◯	
12)	Abnormal voltage (+17V, +9V, +5V line) for LCD Drive P.C.B.	8	-	-	(H80LCDDV)	◯	

Note:

1. The detected SOS Error 1) 2) 3) 4) 11) 12) data will be stored in the EEPROM.
2. SOS (Error) information is displayed in Service Mode (4/4).
3. LAMP OFF: The LED will flash immediately after the Lamp goes off.
4. **In case of Error 9) or 10), the unit will not shut off and Dynamic Iris setting in Adv. adjust of Picture Menu will be changed to "OFF" automatically. When the unit is turned off and turned back on, Dynamic Iris "OFF" setting remains. Lamp LED will not flash as long as Dynamic Iris setting in Adv. adjust of Picture Menu is set to "ON" manually.**

This manual downloaded from http://www.manualowl.com

Protection Circuit

SOS terminal of IC6001 (Main microcontroller) and IC2301 (LCD Microcontroller)

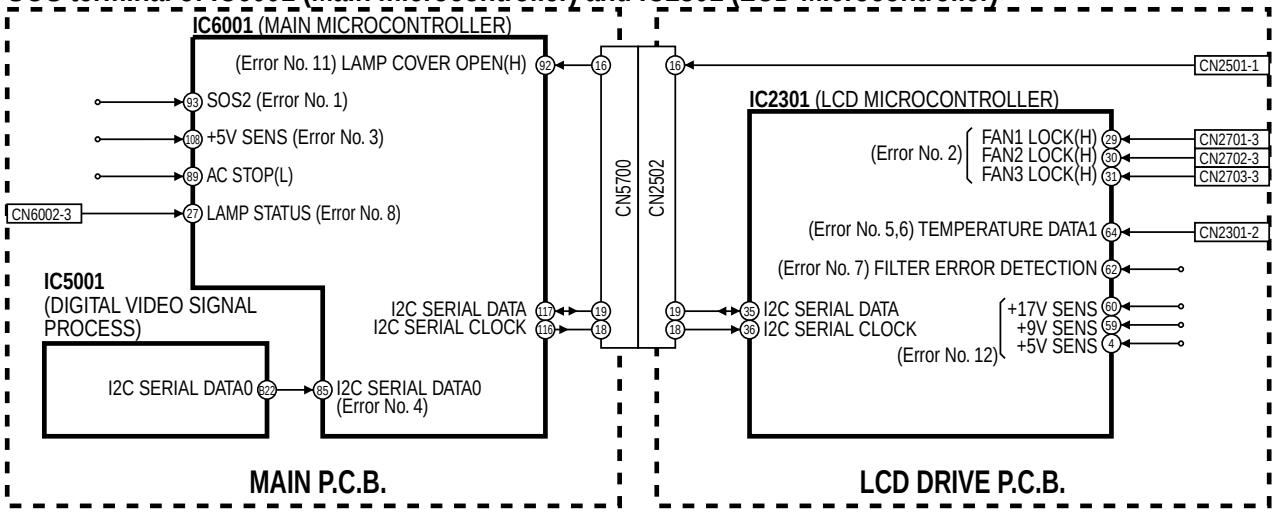

1) SOS2 (over voltage/current detect) detection circuit

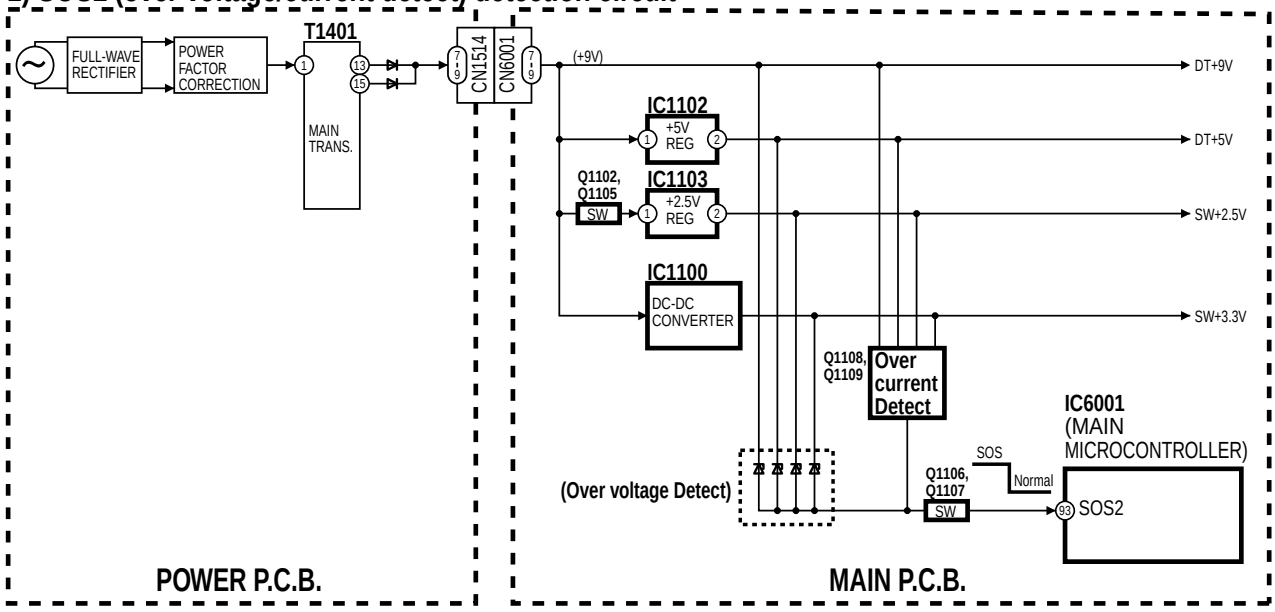

2) Fan1, Fan2 or Fan3 stopped detection circuit

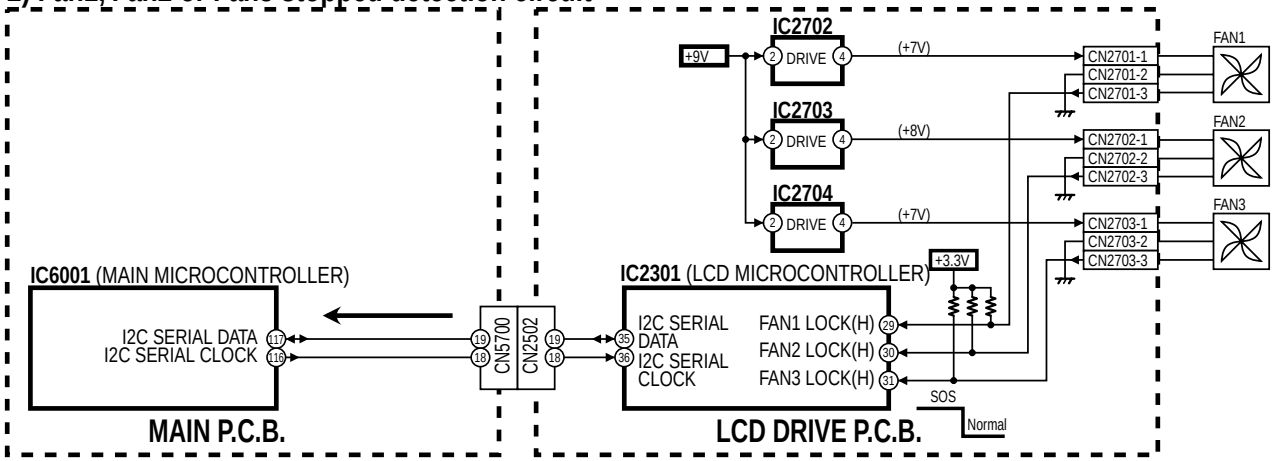

This manual downloaded from http://www.manualowl.com

3) Abnormal voltage (DT+5V line) detection circuit

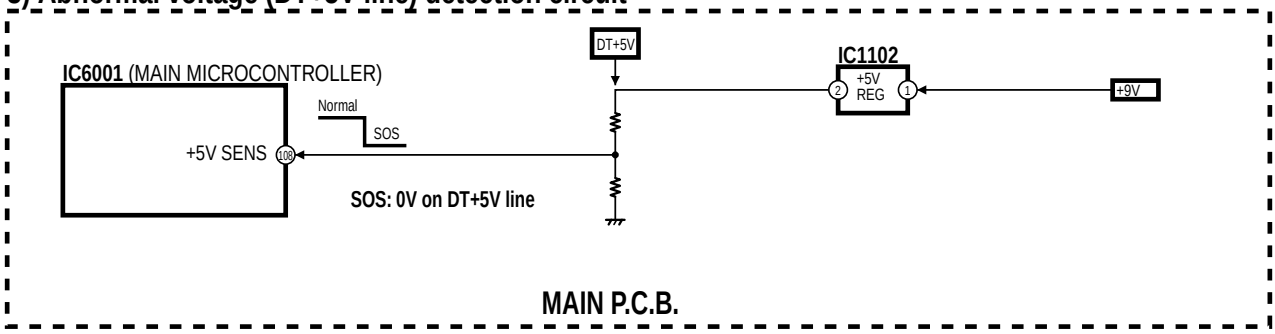

4) IC5001 (GC4PRO) communication error detection circuit

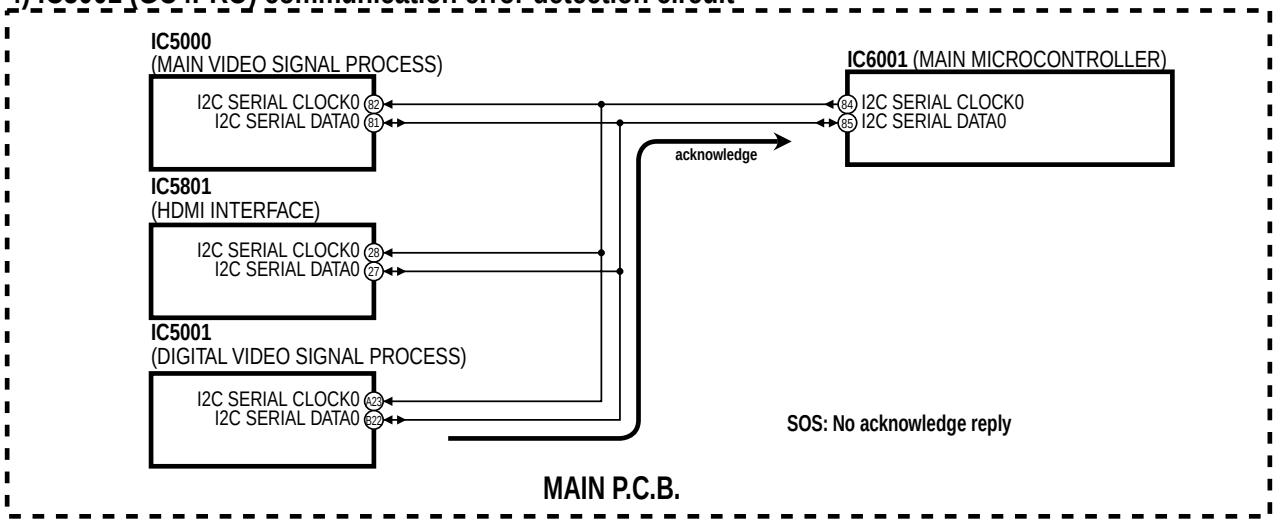

5, 6) Temperature Sensor error (shorted, open, or abnormal) detection circuit

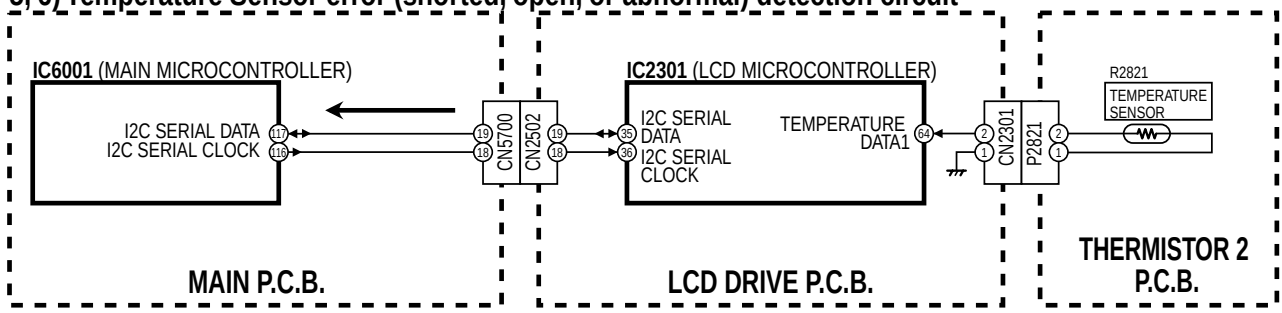

7) Clogged air filter detection circuit

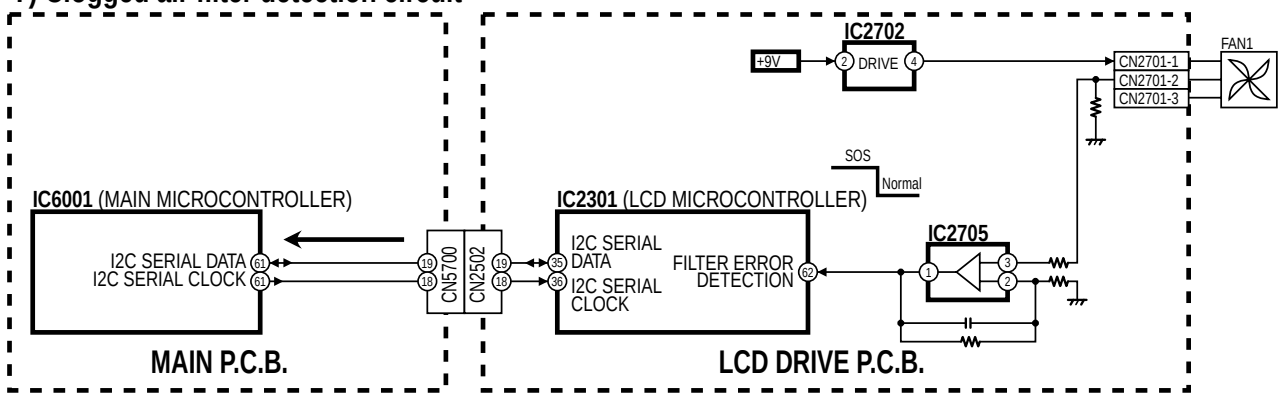

This manual downloaded from http://www.manualowl.com

8) Abnormal Lamp detection circuit

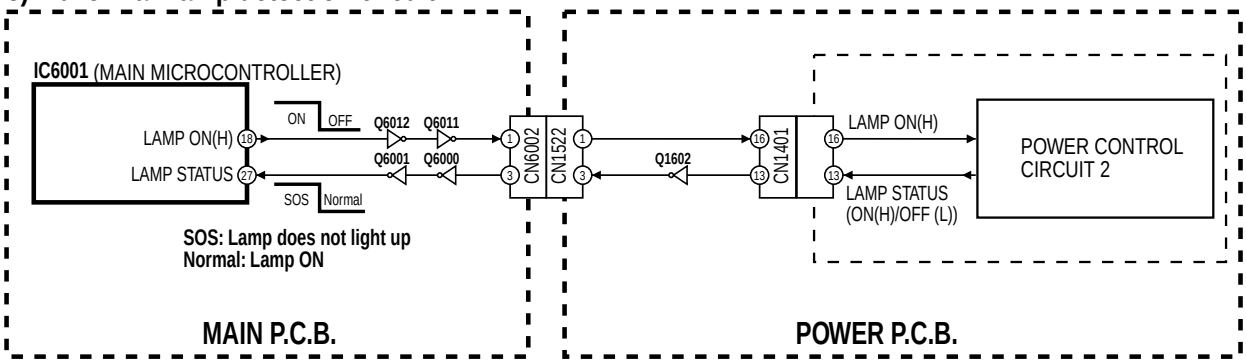

9), 10) Iris Mechanism hardware error/Iris calibration error detection circuit

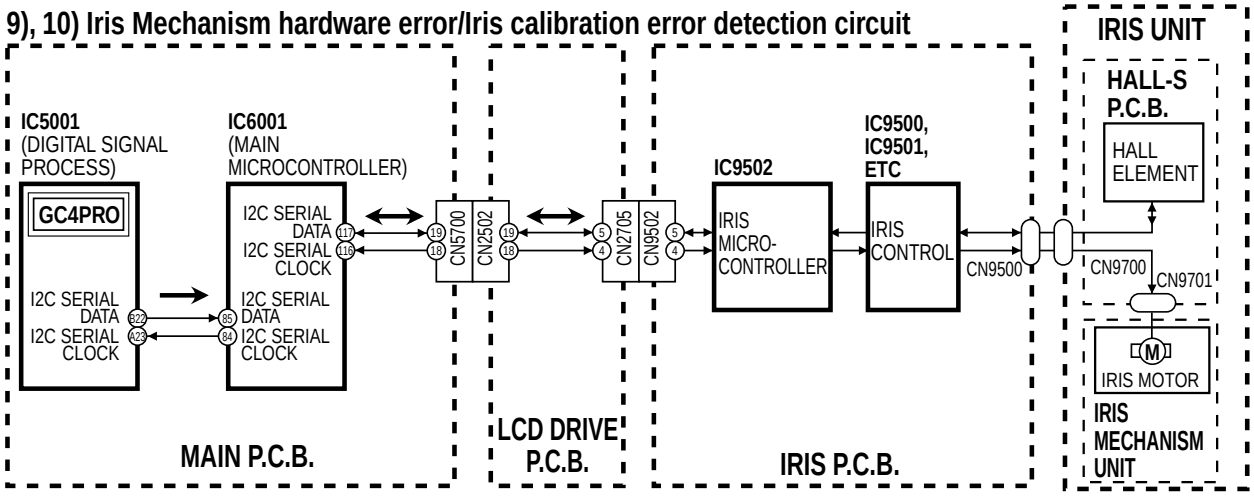

11) Lamp cover open detection circuit

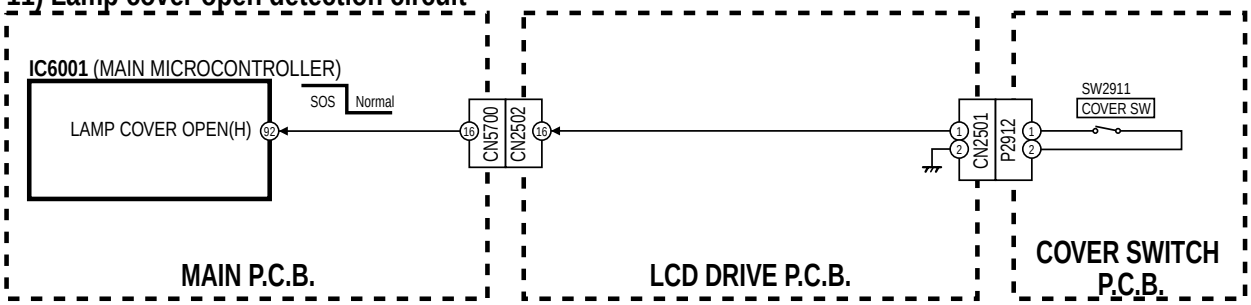

12) Abnormal voltage (+17V, +9V, +5V lines) detection circuit

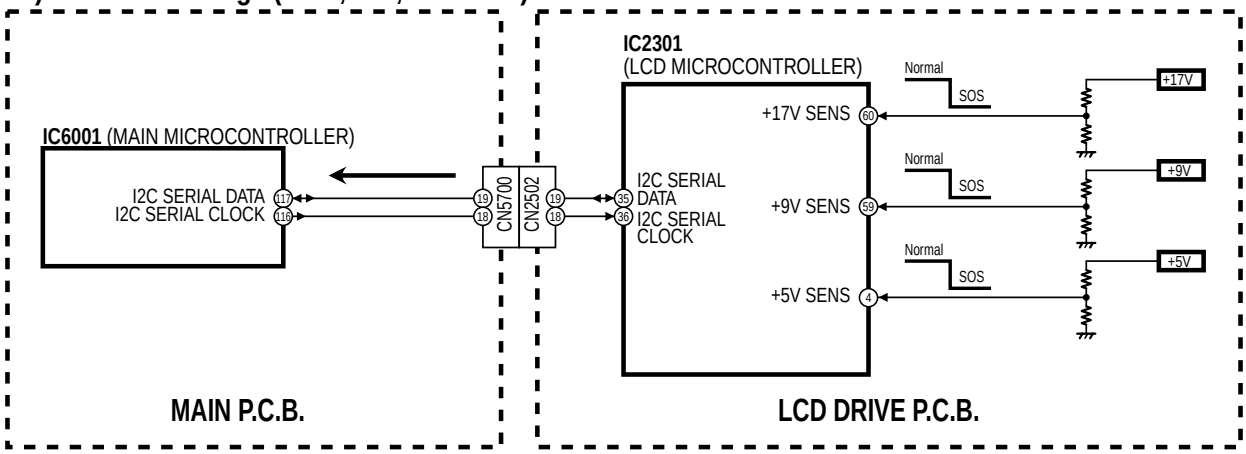

This manual downloaded from http://www.manualowl.com

● AC stop detection circuit

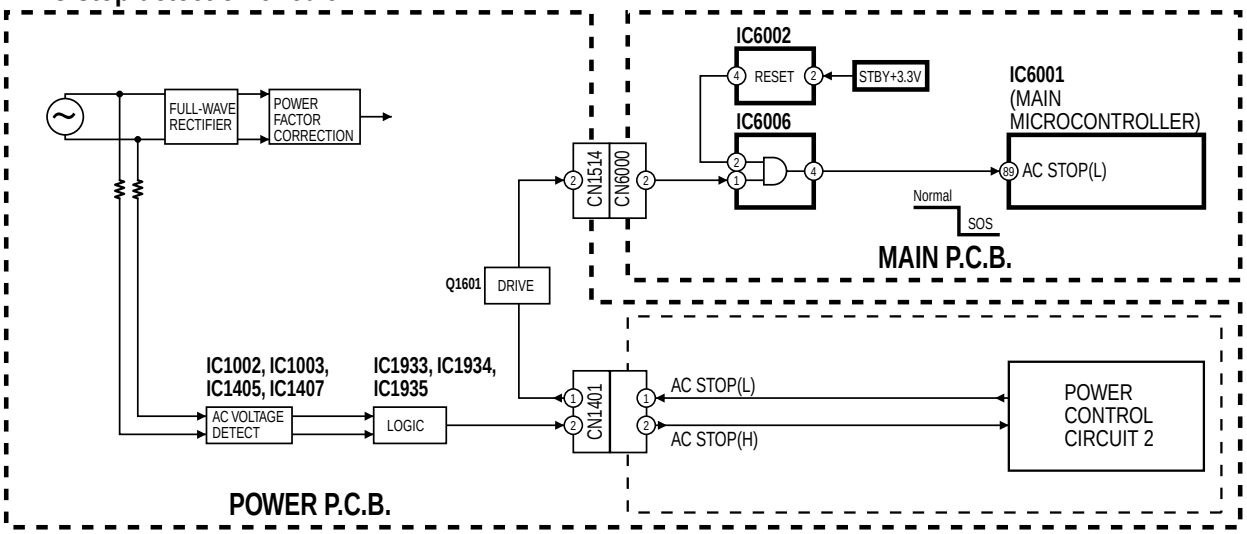

● Over voltage/current detection circuit

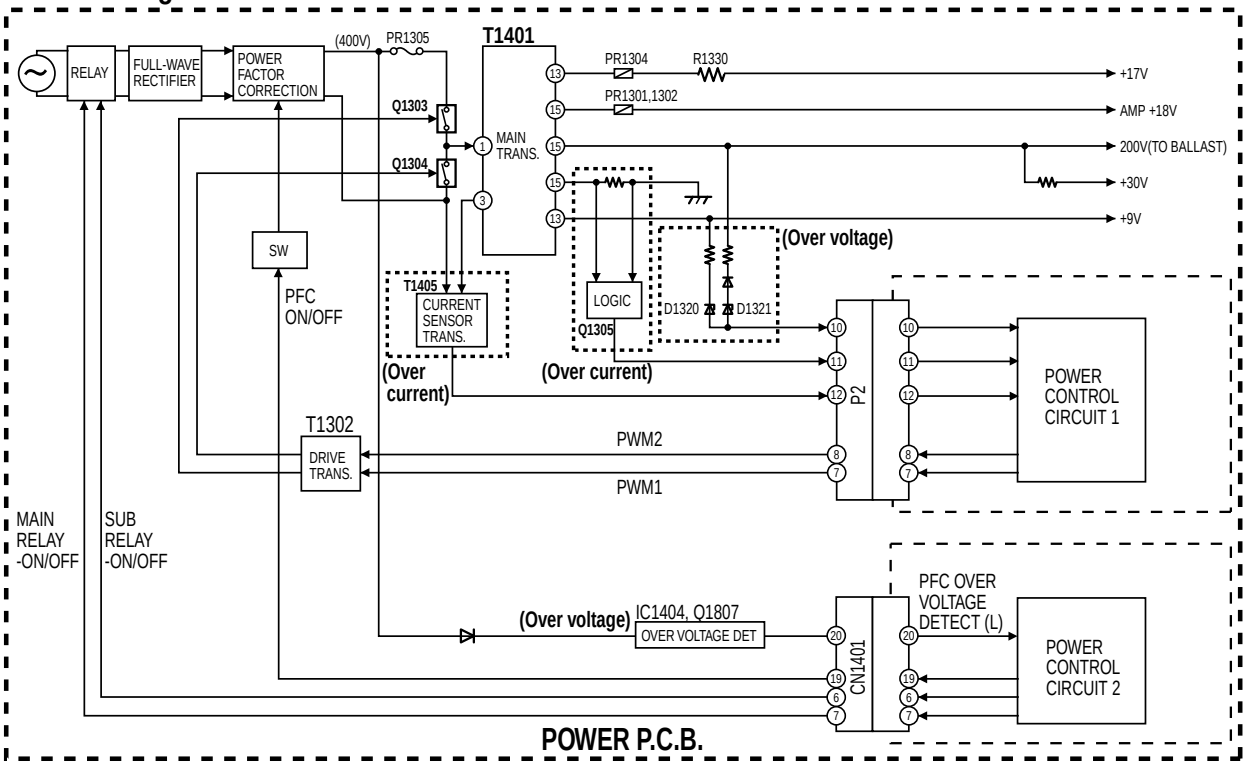

● Abnormal Temperature (Thermal fuse)

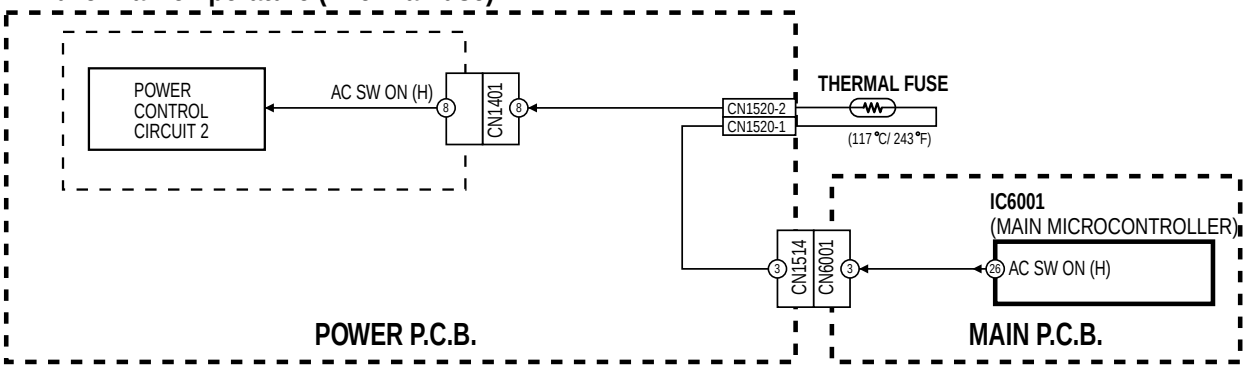

This manual downloaded from http://www.manualowl.com

How to solve problems indicated by the Error Indication of LED

(The symptom of all errors is that Lamp goes off or Lamp does not light up)

Note: Before performing the troubleshooting, confirm that all connector cables in the unit are connected correctly.

Error No.	Problem	Possible Solution
1)	Following voltage lines on the Main P.C.B. is over voltage or over current. • DT+9V line • DT+5V line • SW+3.3V line • SW+2.5V line	Replace the TV Unit (Main P.C.B).
2)	Cooling Fan (Fan 1, Fan 2 and/or Fan 3) malfunction.	Are Fan 1, Fan 2 and Fan 3 operating for a moment just after the power is turned on? All Fans stop. → Replace the LCD Drive P.C.B. or Power P.C.B. Only Fan 1 stops. → Replace the Projection Unit (LCD Drive P.C.B.). Only Fan 2 stops. → Replace the Projection Unit (LCD Drive P.C.B.). Only Fan 3 stops. → Replace the Fan3. If still NG, replace the Projection Unit (LCD Drive P.C.B.).
3)	DT+5V line on the Main P.C.B. error.	1. Replace the TV Unit (Main P.C.B.) 2. If still NG, replace the Digital Tuner P.C.B. 3. If still NG, replace the Power P.C.B.
4)	Communication error I2C SERIAL DATA for between IC6001 (Pin 85) and IC5001 (Pin B22) on the Main P.C.B.	Replace the TV Unit (Main P.C.B.).
5)	The temperature sensor (R2821) on the Thermistor 2 P.C.B. on the Lamp Top Panel is short or open.	1. Remove CN2301 connector on the LCD Drive P.C.B. and check if the resistance between pin1 and pin2 of P2821 on the Thermistor 2 P.C.B. is 5 kΩ ~ 1 MΩ. 2. If still NG, replace the Temperature Sensor (R2821) on the Thermistor 2 P.C.B. 3. If still NG, replace the Projection Unit (LCD Drive P.C.B.). 4. If still NG, replace the TV Unit (Main P.C.B).
6)	It indicates when the temperature detected by the Temperature Sensor (R2821) on Thermistor 2 P.C.B. exceeds 105 ˚C (221 ˚F). 1. The surrounding temperature of the place of use may be too high. 2. The vents on the rear may be blocked.	1. Relocate the unit to a proper location. • Do not place in direct sunlight and other sources of direct heat. • Do not place the unit in humid or dusty location, or areas exposed to smoke or steam. (surrounding temperature should be between 0 ˚C (32 ˚F) and 35 ˚C (95 ˚F) and humidity should be between 20 % and 80 % (with no condensation).) • The vents are not blocked. It is recommended that a gap of at least 10 cm is left all around the unit even when it is placed inside a cabinet or between shelves. 2. Check if the fans are operating properly.
7)	Clogged Air Filter of the Fan Case Unit.	1. Clean the Air Filters on the Projection Unit. 2. If still NG, replace the Projection Unit. 3. If still NG, replace the TV Unit (Main P.C.B.).
8)	The Lamp is defective (short of the Lamp).	1. Wait until the Lamp is cooled off and try to turn the power back on. If same error LED indication continues, remove the Lamp and visually inspect it. If it is cracked, it must be replaced. If the Lamp is OK, replace the Power P.C.B.
9)	When the Iris Mechanism fails to reach the objective angle of +/- 2˚ in two consective seconds.	Replace the Projection Unit.
10)	When power is turned on, the Iris Mechanism performs calibration to incorporate variations detected by the Hall Sensor. A maximum current (+) and (-) is supplied to the Motor and the Mechanism moves to the full-open/ full-close position. An error occurs when this angle is measured by the Hall Sensor and full-open/ full-close is not reached, or when the angle difference is outside the controllable range.	Replace the Projection Unit.
11)	Mis-installed Lamp Cover (the Lamp cover is open).	1. Install the Lamp Cover Unit properly. 2. If still NG, check and replace the Cover Switch P.C.B. 3. If still NG, replace the TV Unit (Main P.C.B.).
12)	1. +17V line on the LCD Drive P.C.B. error. 2. +9V line on the LCD Drive P.C.B. error. 3. +5V line on the LCD Drive P.C.B. error.	1. Replace the Projection Unit (LCD Drive P.C.B.). 2. If still NG, replace the TV Unit (Main P.C.B.).

This manual downloaded from http://www.manualowl.com

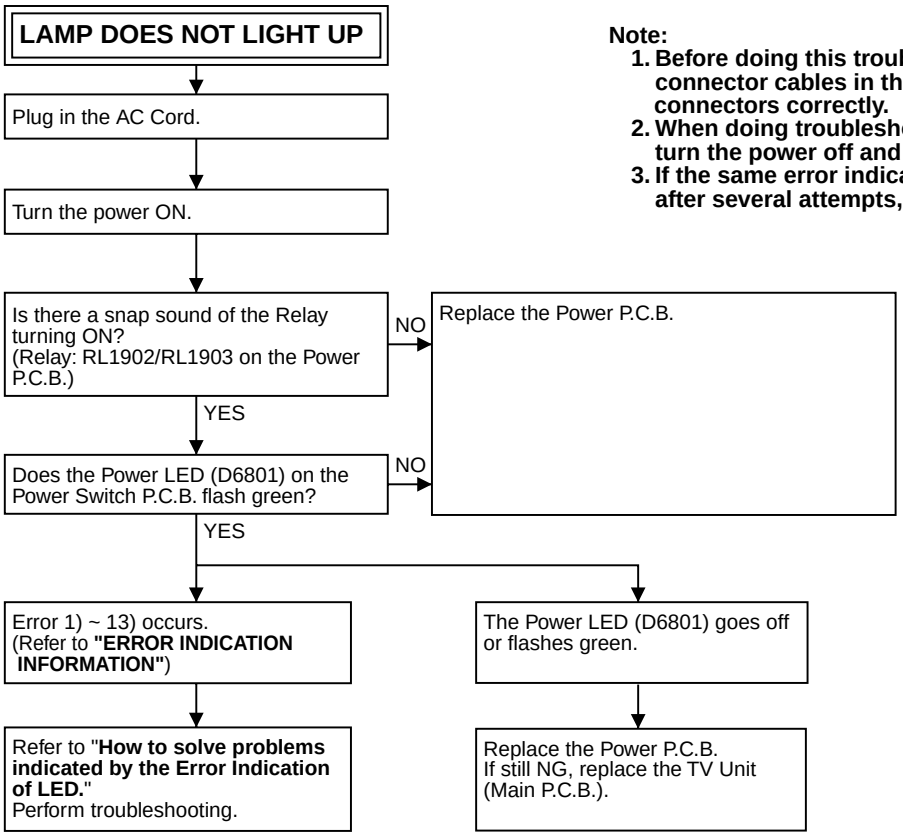

Note:

1. **Before doing this troubleshooting, confirm that all connector cables in the unit are connected to the connectors correctly.**
2. **When doing troubleshooting over again, be sure to turn the power off and unplug the AC Cord.**
3. **If the same error indication occurs repeatedly, after several attempts, proceed to the next step.**

This manual downloaded from http://www.manualowl.com

HOW TO DETERMINE WHICH P.C.B. IS DEFECTIVE

No picture or abnormal picture

ABNORMAL PICTURE:
- **No Picture Color (Black and White picture)**
- **Abnormal Picture Color**
- **Unsynchronized Picture**
- **Dark Picture**

(Only Video1 OR 2 input is NG.)	Replace the TV Unit (Base P.C.B.).
(Only Video3 input is NG.)	Replace the TV Unit (Front Jack/ Operation P.C.B. or Base P.C.B.).
(Only tuner Analog CH input is NG.)	Replace the Digital Tuner P.C.B. or the TV Unit (Base P.C.B.).
(Only PC input is NG.)	Replace the TV Unit (Main P.C.B.).
(Only Component 1 OR 2 input is NG.)	Replace the TV Unit (Base P.C.B.).
(Analog Tuner, Component AND Video input are NG.)	Replace the TV Unit (Base P.C.B.).
(Digital Tuner/SD Card input is NG.)	Replace the Digital Tuner P.C.B. or TV Unit (Main P.C.B.).
(Only HDMI is NG.)	Replace the TV Unit (Main P.C.B.).
(All inputs are NG.)	Replace the Digital Tuner P.C.B., or TV Unit (Main P.C.B.) or Projection Unit (LCD Drive P.C.B.)

In the case that one or some inputs are NG, it can be judged that the Optical Block Unit is OK.

This manual downloaded from http://www.manualowl.com

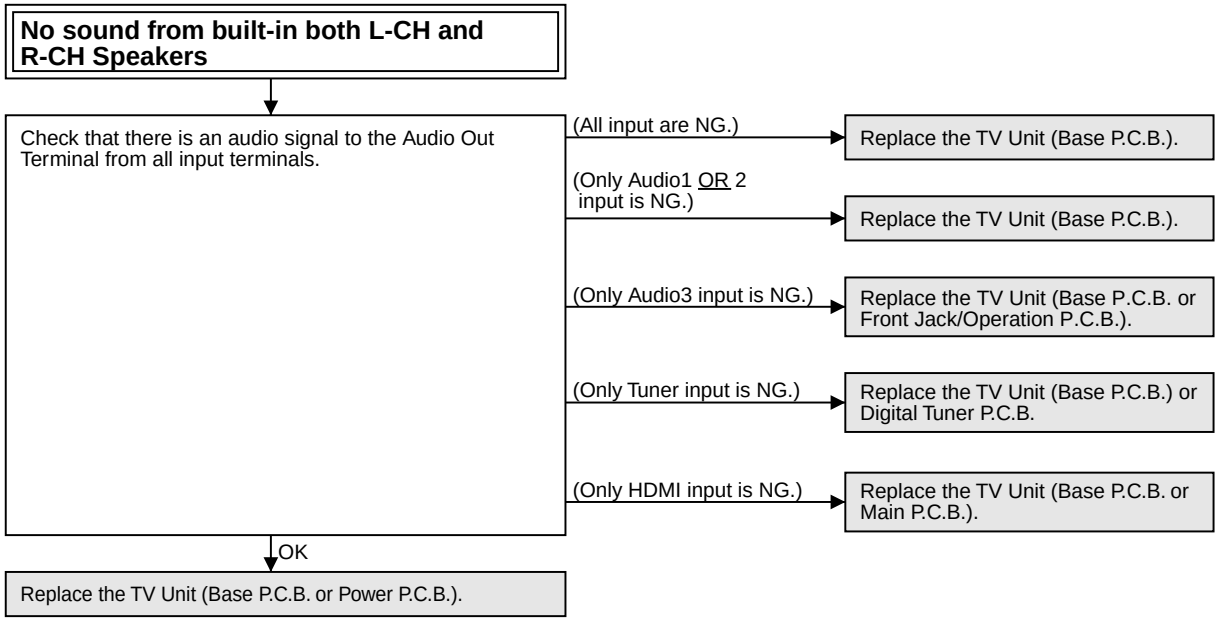

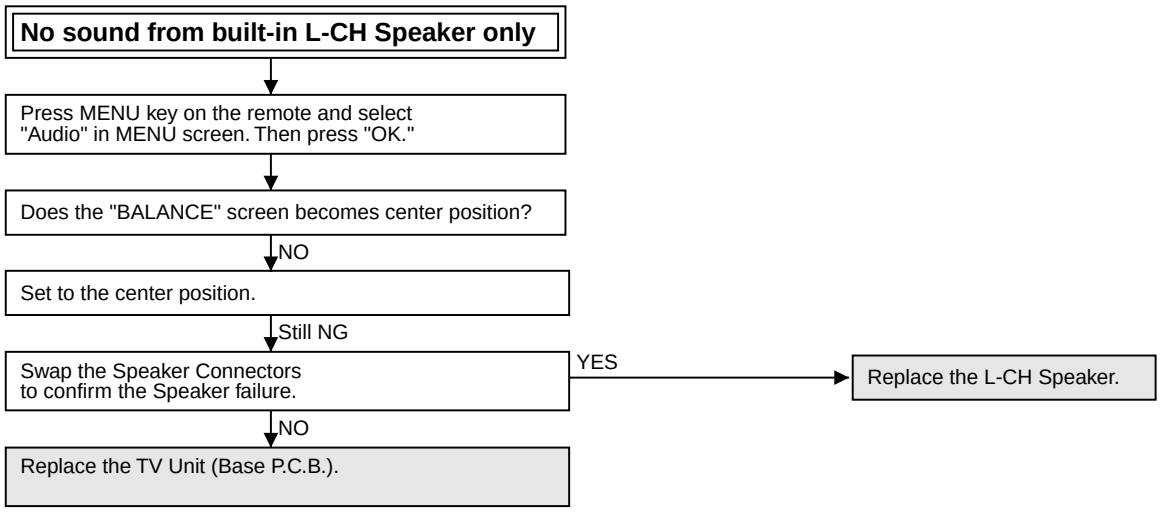

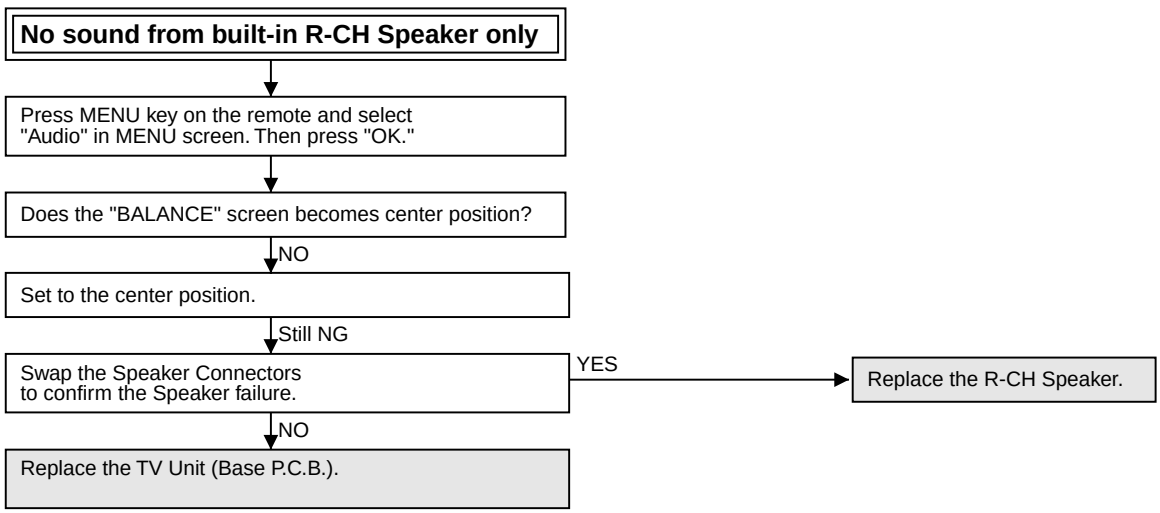

This manual downloaded from http://www.manualowl.com

Tips for determining defective circuit in the case of picture problem

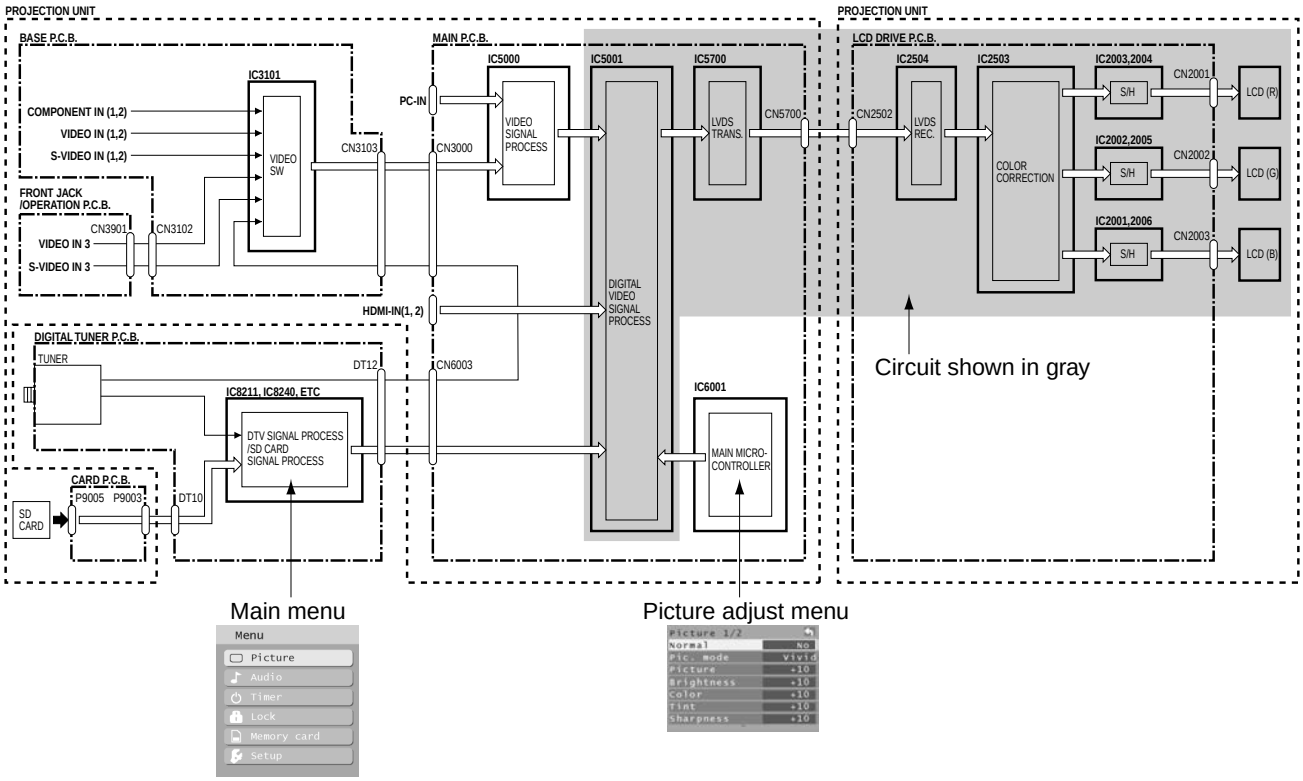

1) Input the signal and display it.
   [Input picture is not displayed normally.]
2) Press MENU key to display the Main menu.

Main menu

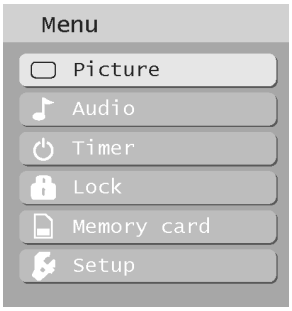

3) Press OK key to select Picture adjust menu.

Picture adjust menu

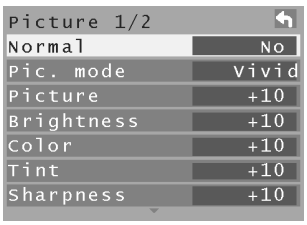

4) If the Picture adjust menu is displayed normally, the circuit shown in gray is judged OK.
   If the Picture adjust menu is not displayed normally, something is wrong with the circuit shown in gray.
   (Most possibly: Projection Unit)

This manual downloaded from http://www.manualowl.com

8 Disassembly and Assembly Instructions

8.1. Cabinet Section

DISASSEMBLY METHOD OF CABINET SECTION

Cabinet section contains following removal procedures:

REMOVAL OF THE TV UNIT AND THE DIGITAL TUNER P.C.B. FROM THE CABINET

REMOVAL OF THE PROJECTION UNIT

REMOVAL OF THE BASE BODY UNIT

REMOVAL OF THE POWER P.C.B. FROM THE CABINET

REMOVAL OF THE FRONT JACK/OPERATION P.C.B., THE SD CARD P.C.B., THE MAIN P.C.B., THE BASE P.C.B. FROM THE TV UNIT

REMOVAL OF THE SCREEN UNIT FROM THE DISPLAY

REMOVAL OF THE MIRROR FROM THE BACK COVER

REMOVAL OF THE POWER SWITCH P.C.B. FROM THE CABINET

DISASSEMBLY FLOWCHART

This flow chart indicates the disassembly steps of the cabinet parts and the P.C.Boards in order to gain access to item (s) to be serviced. When reassembling, perform the step (s) in the reverse order. Bend, route and dress the wires as they were originally.

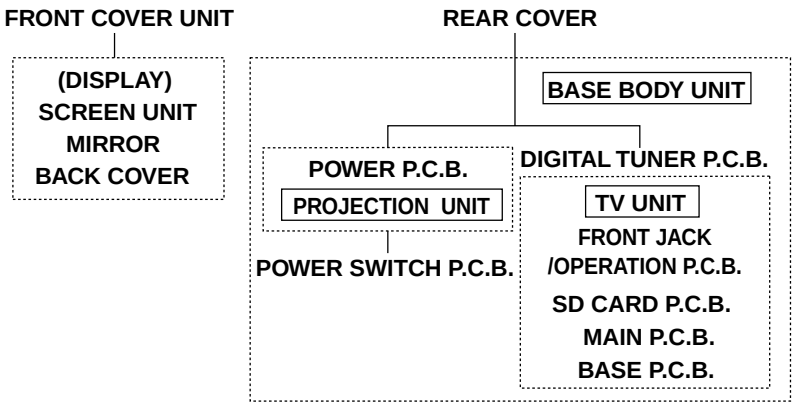

Note :

a. Place a cloth or some other soft material under the P.C. Boards or Unit to prevent damage.
b. When reinstalling, ensure that the connectors are connected firmly and electrical components have not been damaged.
c. Do not supply power to the unit during disassembly and reassembly.

This manual downloaded from http://www.manualowl.com

REMOVAL OF THE TV UNIT AND THE DIGITAL TUNER P.C.B. FROM THE CABINET

1. Remove the Rear Cover Unit by removing the 13 Screws (401) then pinching the 3 latch tabs.

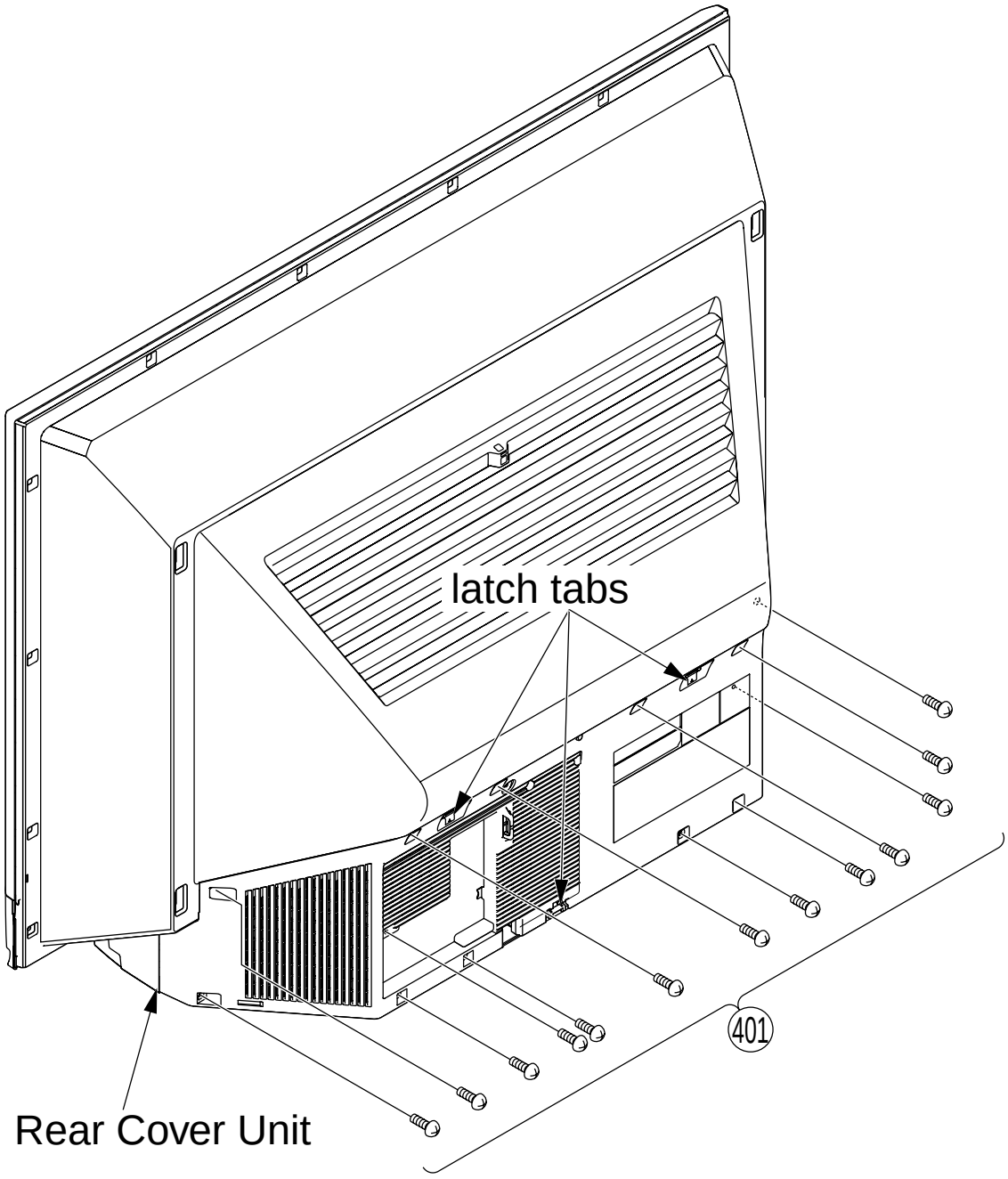

Fig. D1-1

This manual downloaded from http://www.manualowl.com

2. Remove the Connecting Plate R by removing the 2 Screws (401, 402).
3. 1) Remove the 2 Screws (402) on the Connecting Plate F, and remove the Screw (401) on the left side of the TV Unit.
   2) Disconnect Connectors CN4501, CN6000, CN6001, CN6002, CN6008 and the 2 Speaker Connectors and release from the clampers.
   3) To access the GND Wire of the LVDS Cable, slide the TV Unit with the Digital Tuner P.C.B. along the Guide Tabs.
   4) Remove the Screw (402) on GND Wire of LVDS Cable, and disconnect the LVDS Cable from Connector CN5700.
   Note: refer to next page.
   5) Remove the TV Unit with the Digital Tuner P.C.B.

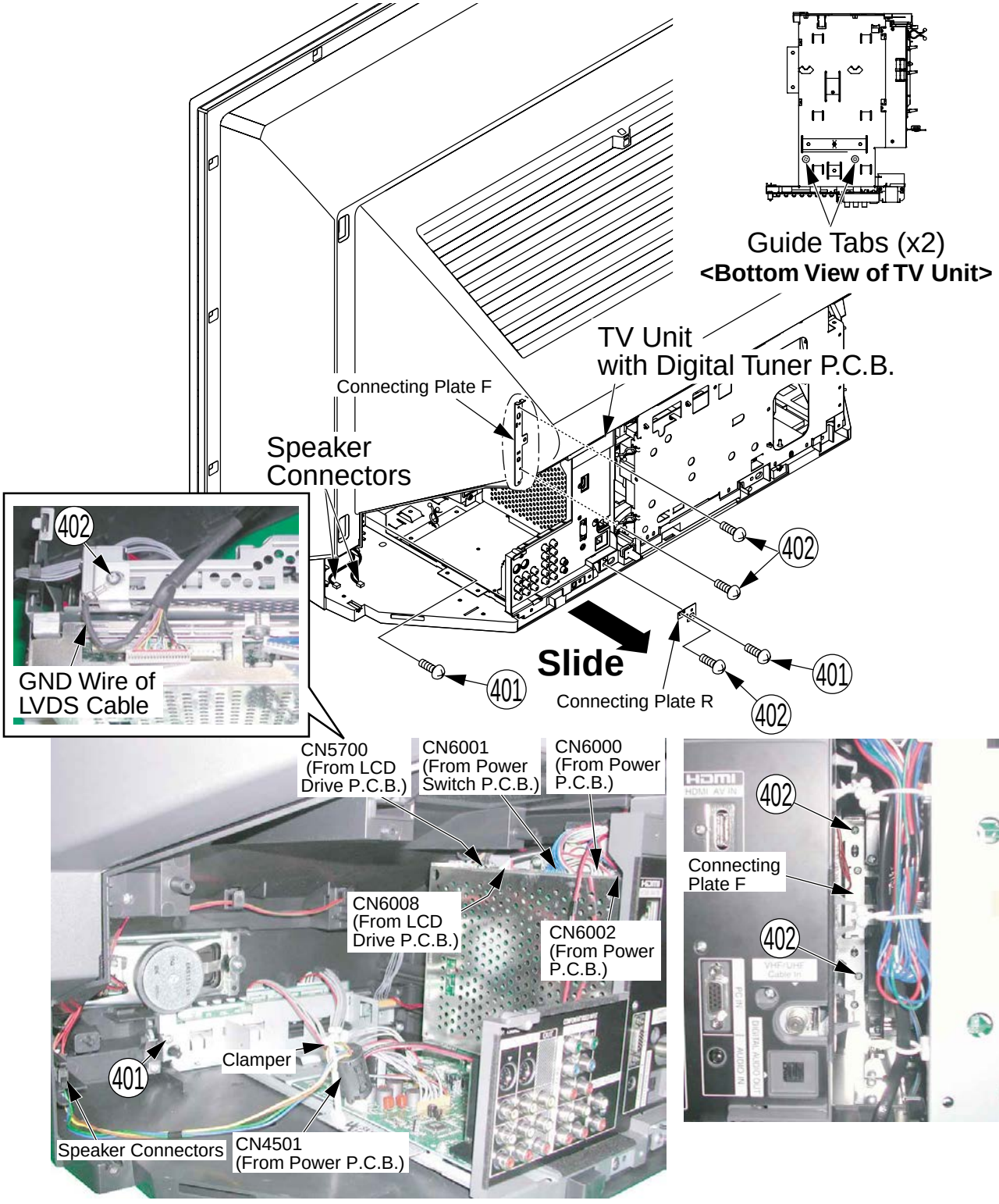

Fig. D1-2

This manual downloaded from http://www.manualowl.com

Note:

Grasping the center of both sides of the sheet or cable with your fingers, slowly and steadily pull the LVDS Cable straight out from the connector. Do not joggle the LVDS cable while disconnecting. Reconnecting is done in the same manner.

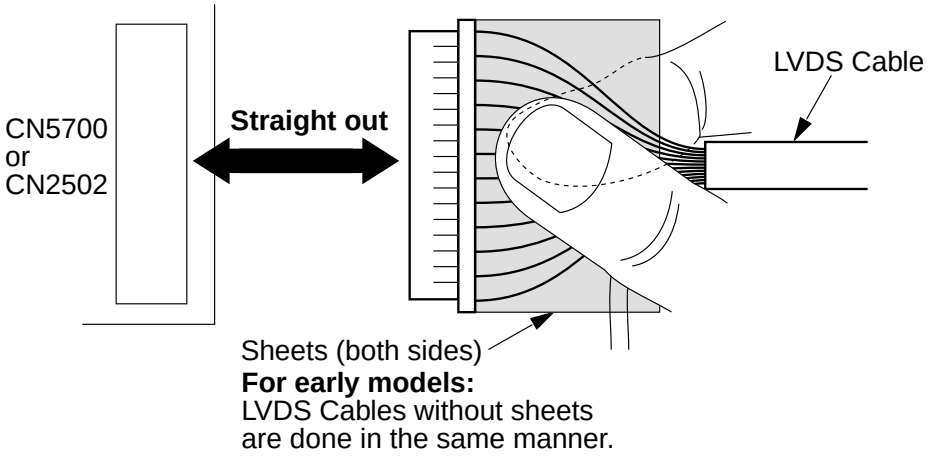

4. 1) Disconnect Connector DT10.
   2) Remove the Digital Tuner P.C.B. by removing the 6 Screws (402, 480). (BtoB Connector DT12 is disconnected.)
   Note:
   If the Digital Tuner P.C.B. is difficult to remove, remove the Rear Jack Holder by removing the 6 (or 7: **PT-52/56LCX16, PT-52/61LCX66-K, PT-56LCX15-K**) Screws (402, 452) and releasing the Locking Tab.

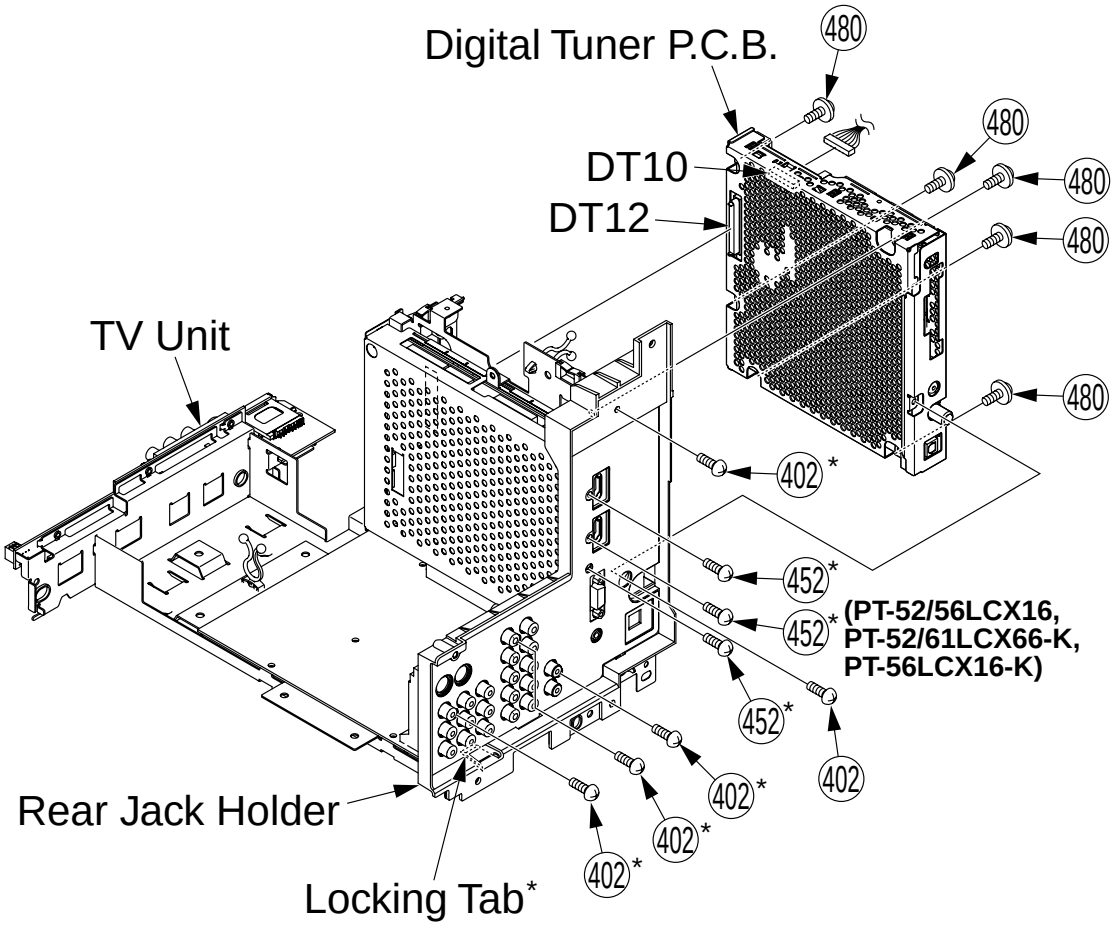

Fig. D1-3

This manual downloaded from http://www.manualowl.com

REMOVAL OF THE PROJECTION UNIT

1. Remove the TV Unit with the Digital Tuner P.C.B. Refer to Steps 1 ~ 2 in "REMOVAL OF THE TV UNIT AND THE DIGITAL TUNER P.C.B. FROM THE CABINET."
2. 1) Remove the 2 Screws (402) on the Connecting Plate F.
   2) Remove the 4 Screws (401) on the Projection Unit.
   3) Slide the Projection Unit along the Groove.

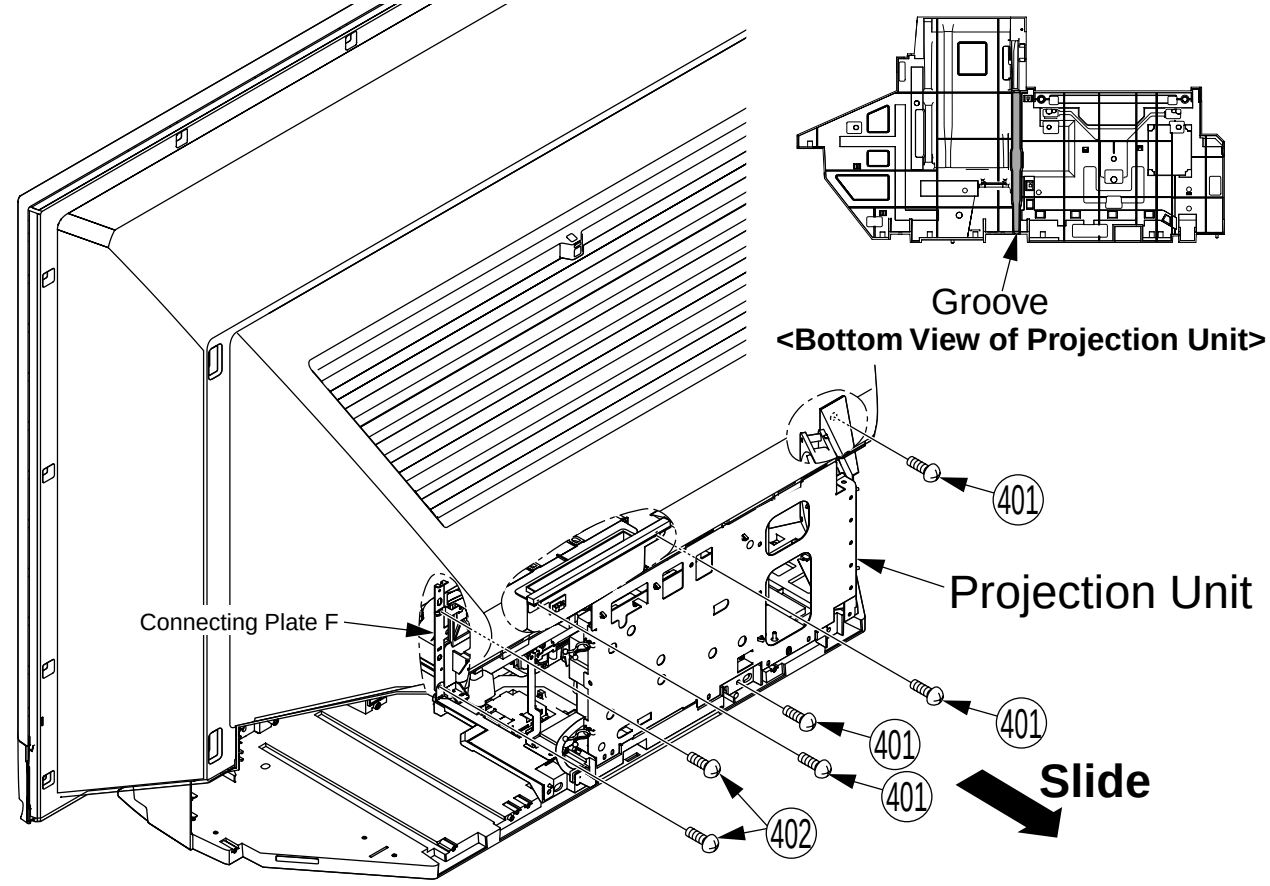

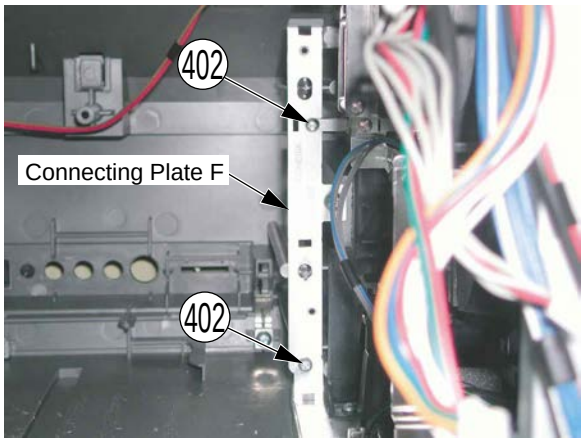

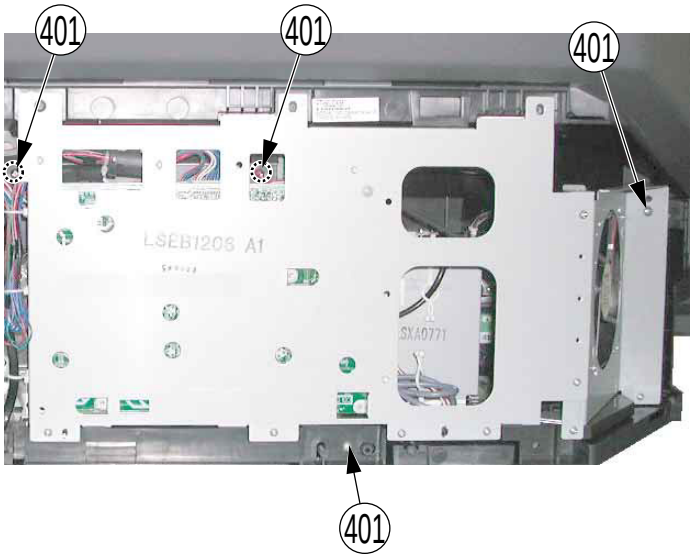

Fig. D2-1

This manual downloaded from http://www.manualowl.com

3. 1) Remove the Top Duct 3 Unit by removing the 4 Screws (421).
CAUTION:
When removing the Screws (421) on the Top Duct 3 Unit, plastic dust may be produced. Therefore, confirm that there is no dust on the Top Duct 3 Unit. If there is dust, clean the Top Duct 3 Unit with a brush, etc. Otherwise, dust may adhere to the inside of the screen.
2) Remove the Lamp Unit by turning the Knob.

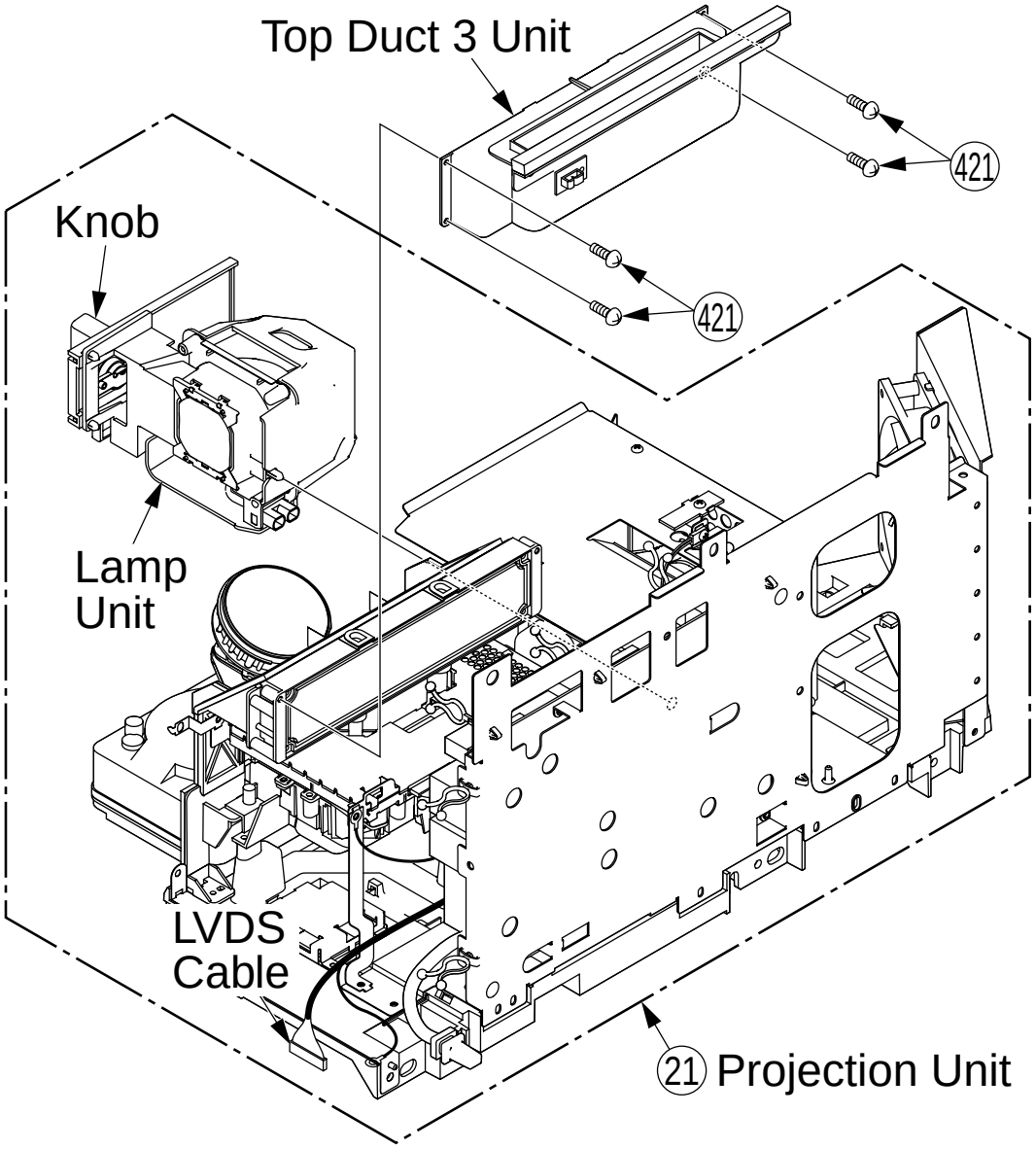

Fig. D2-2

Replacement Note of Projection Unit:
1. After replacing the Projection Unit, be sure to perform "ADJUSTMENT of Projection Unit." Refer to "WHEN INSTALLING THE PROJECTION UNIT OR THE BASE BODY UNIT INTO THE UNIT AT THE USER'S LOCATION:."
2. These parts will be necessary when replacing. Set aside, keep, and re-use.
   - Top Duct 3 Unit
   - Lamp Unit

This manual downloaded from http://www.manualowl.com

REMOVAL OF THE BASE BODY UNIT

1. Remove the Rear Cover Unit. Refer to Step 1 in "REMOVAL OF THE TV UNIT AND THE DIGITAL TUNER P.C.B. FROM THE CABINET."
2. 1) Remove the Front Cover Unit from the latches.
   2) Remove the 5 Screws (454) from front side, and remove the Display.

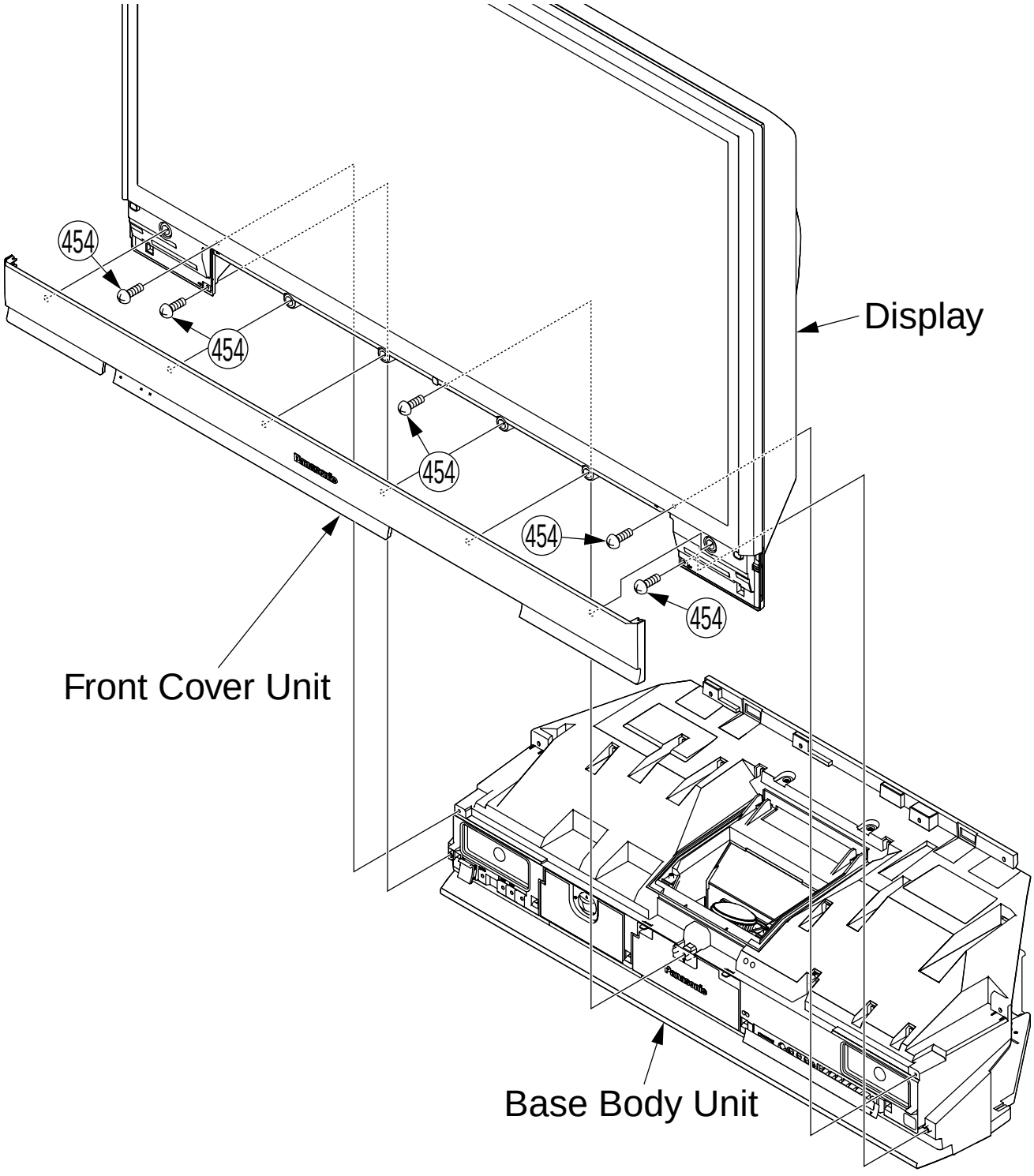

Fig. D3

Replacement Note:
After replacing the Base Body Unit, be sure to perform "ADJUSTMENT of Projection Unit." Refer to "WHEN INSTALLING THE PROJECTION UNIT OR THE BASE BODY UNIT INTO THE UNIT AT THE USER'S LOCATION:."

This manual downloaded from http://www.manualowl.com

REMOVAL OF THE POWER P.C.B. FROM THE CABINET

1. Remove the Rear Cover Unit. Refer to Step 1 in "REMOVAL OF THE TV UNIT AND THE DIGITAL TUNER P.C.B. FROM THE CABINET."
2. 1) Open the Power P.C.B/Power PCB Mount Metal by removing the 6 Screws (402, 421).
   2) Disconnect Connectors CN1522, CN1514, CN1516, CN1520 (Thermal Fuse) and release from the clampers.
   3) Remove the Lamp Unit by turning the Knob from the front.
3. 1) Disconnect the Lamp Connector by removing the 2 Screws (451).

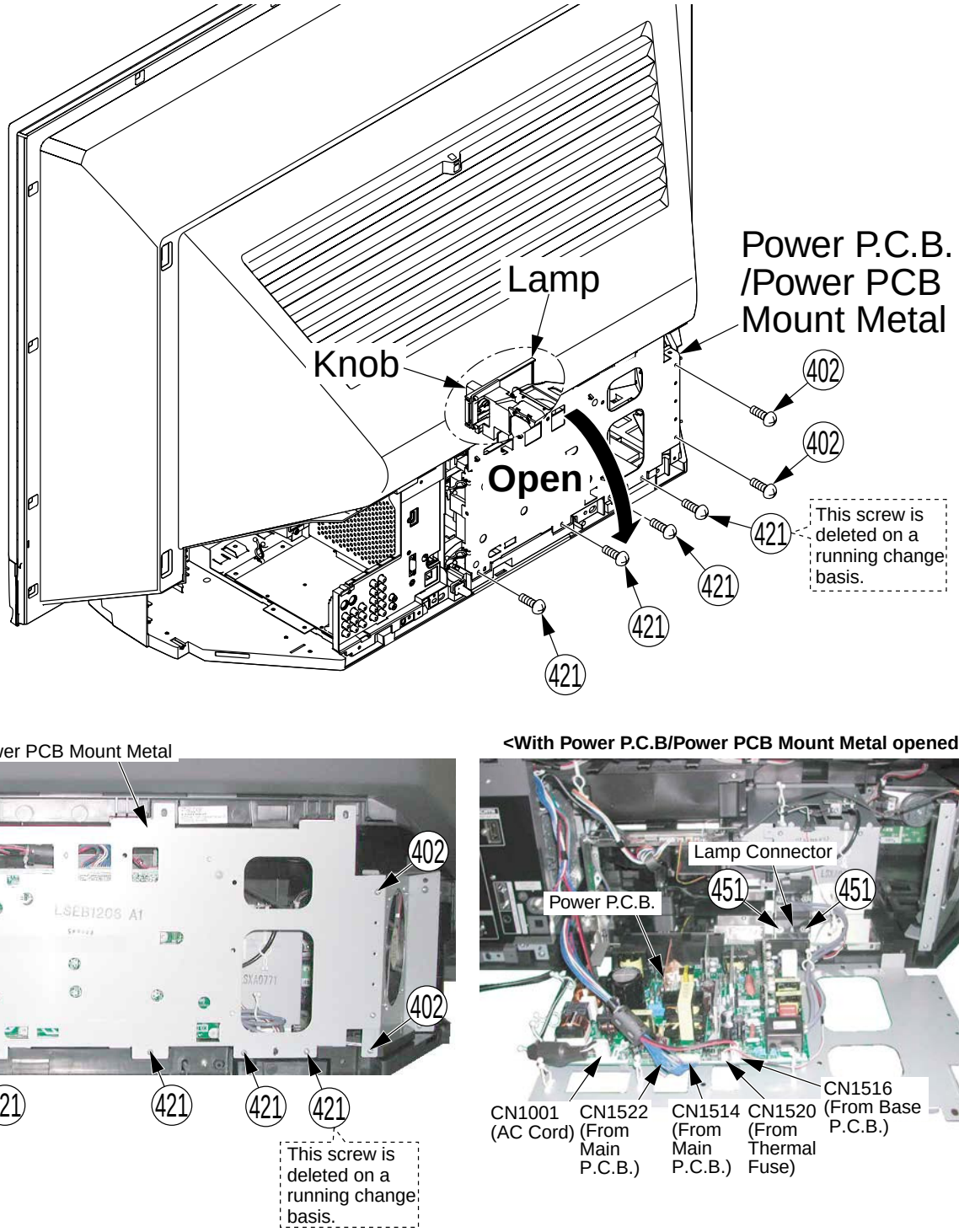

Fig. D4-1

Reassembly Note for Lamp:
After installing the Lamp Unit, confirm that the Lamp Unit will not come out by pulling on the Knob.

This manual downloaded from http://www.manualowl.com

2) Remove the Power P.C.B. by removing the 5 Screws (479) and release from the spacer.

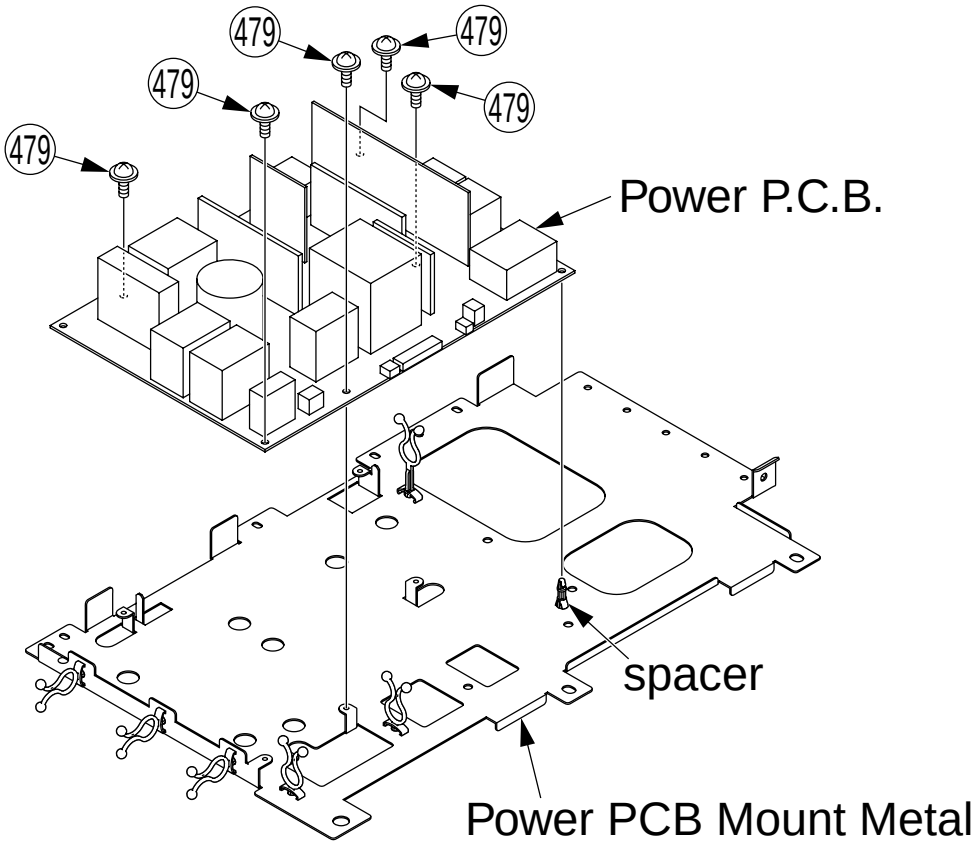

Fig. D4-2

CAUTION:

High voltage exists on the Power P.C.B. While removing Power P.C.B., do not touch any parts on the board. Hold the edge of the board when removing it.

C1810:
High voltage
generated.
(approx. 400 V)

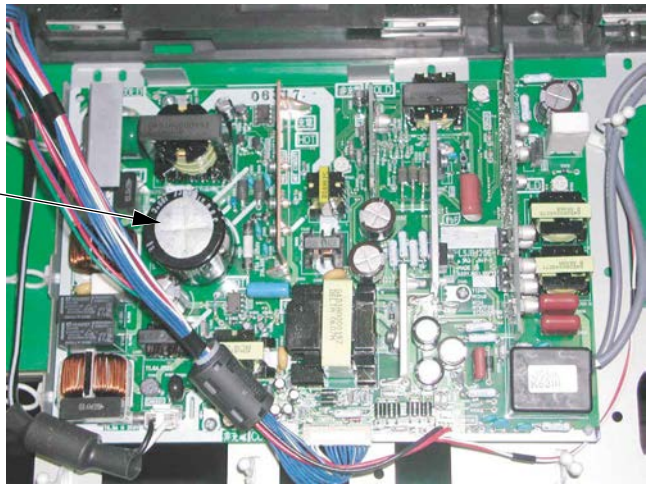

This manual downloaded from http://www.manualowl.com

REMOVAL OF THE FRONT JACK/OPERATION P.C.B., THE SD CARD P.C.B., THE MAIN P.C.B., THE BASE P.C.B. FROM THE TV UNIT

1. Remove the TV Unit. Refer to Steps 1 ~ 4 in "REMOVAL OF THE TV UNIT AND THE DIGITAL TUNER P.C.B. FROM THE CABINET."
2. Remove the Rear Jack Holder by removing the screws and releasing Locking tab (" ▽ " mark).
3. Remove the Main P.C.B. and the Main PCB Mount Metal together by removing the screws (" ○ " mark) and the connector. Then remove the Main P.C.B. by removing the screws (" △ " mark).
4. Remove the Base P.C.B. by removing the screws (" □ " mark).

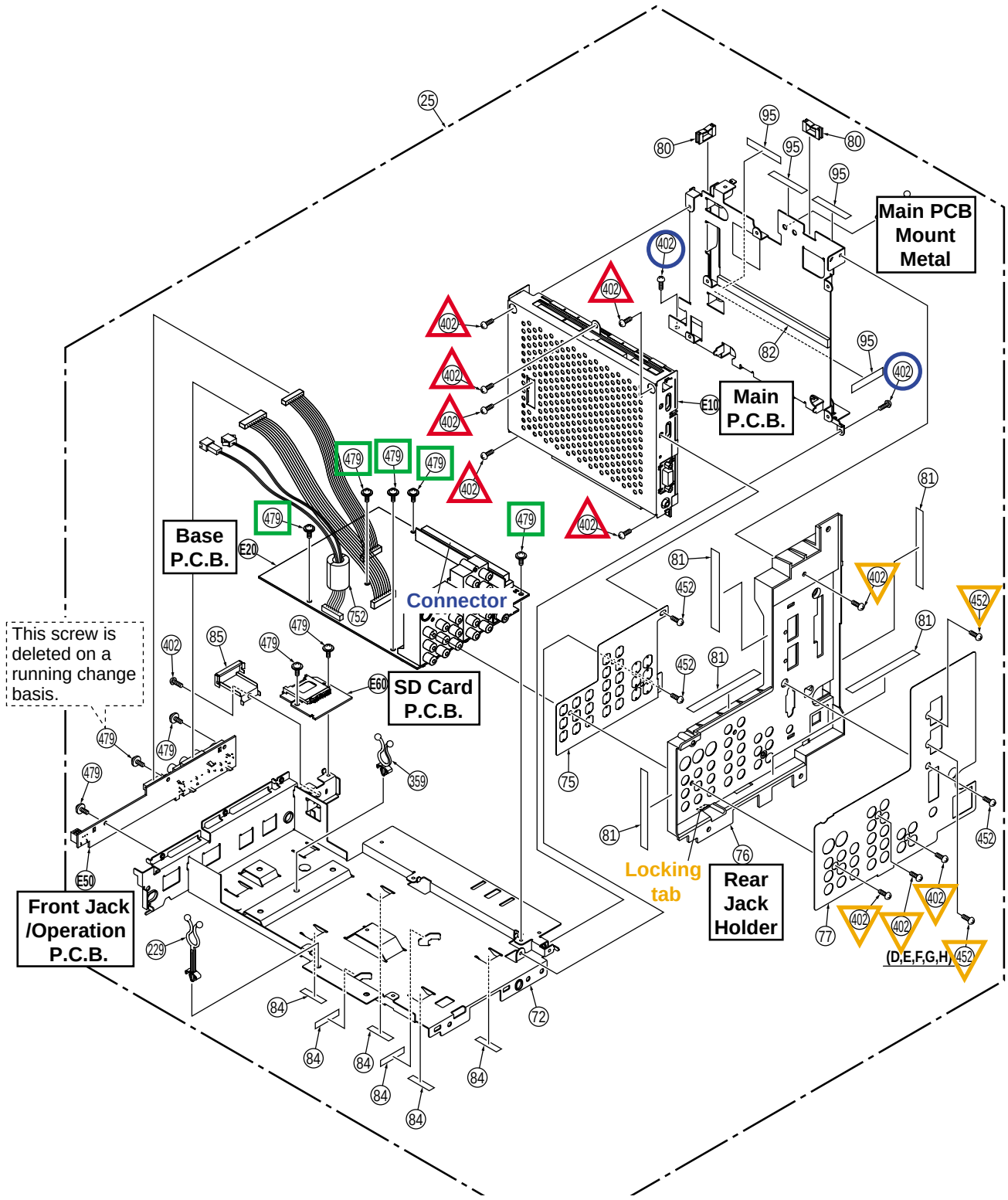

This manual downloaded from http://www.manualowl.com

REMOVAL OF THE SCREEN UNIT FROM THE DISPLAY

1. Remove the Display. Refer to Steps 1 ~ 2 in "REMOVAL OF THE BASE BODY UNIT."
2. Remove the Screen Unit by removing the 16 Screws (401).

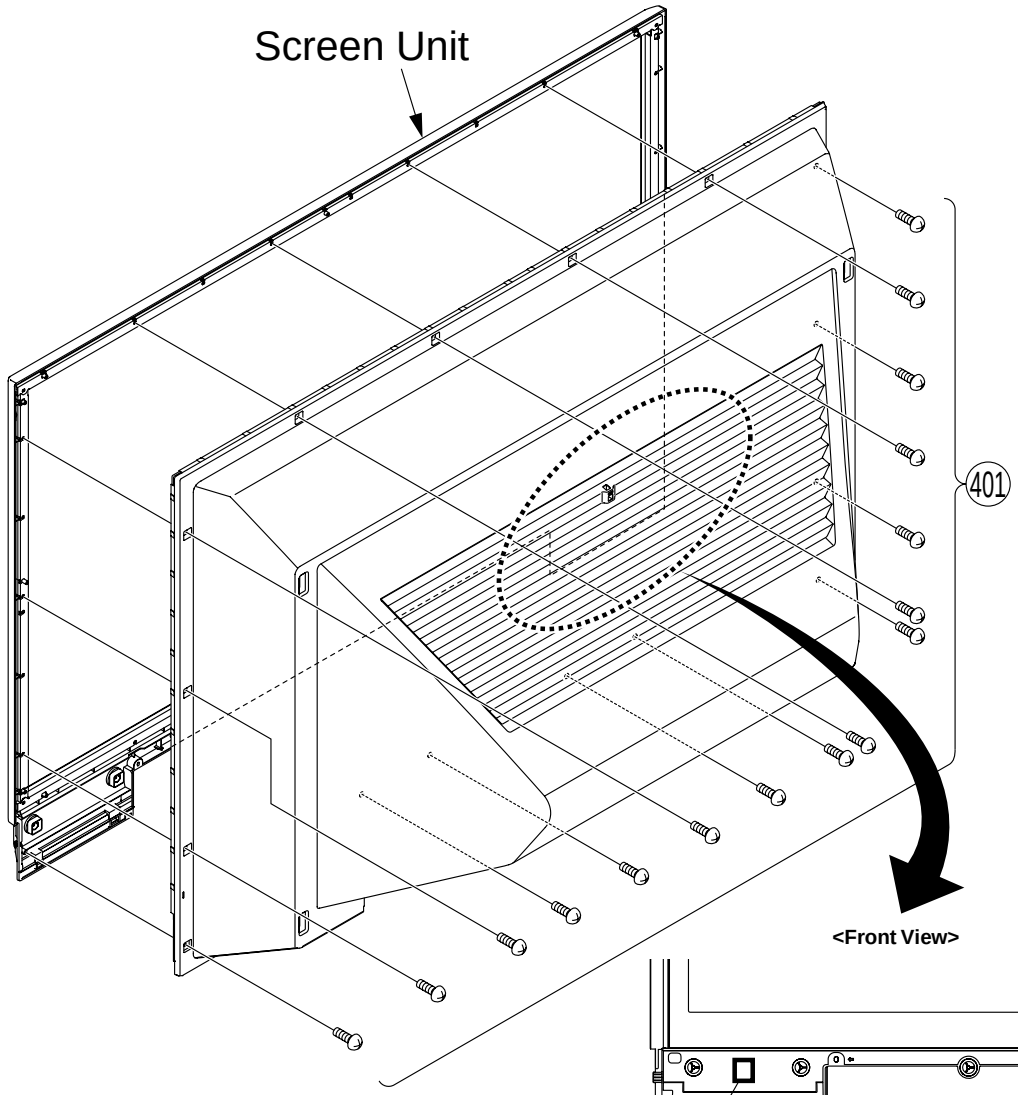

See label on the 56 inch Screen Unit.

label / Screen Unit	T by TOPPAN	K by KURARAY
PT-56LCX66	LSYK1871	LSYK1888
PT-56LCX16/-K	LSYK1872	LSYK1889

Fig. D5-1

Replacement Note for 56 inch Screen Unit:
Because there are two types of 56 inch Screen Unit, a label (T or K) is indicated on the Screen Unit.
When servicing a 56 inch Screen Unit, remove the Front Cover Unit and confirm the label on the unit. Then, order the correct parts according to the above chart.
(PT-56LCX66)
Screen Unit (LSYK1871) is compatible with the Screen Unit (LSYK1888) as a unit.
(PT-56LCX16/PT-56LCX16-K)
Screen Unit (LSYK1872) is compatible with the Screen Unit (LSYK1889) as a unit.

This manual downloaded from http://www.manualowl.com

3. Remove the 2 Screen Angle H Units and the 2 Screen Angle V Units by removing the 14 Screws (465), and remove the Fresnel Lens and the Lenticular Screen.

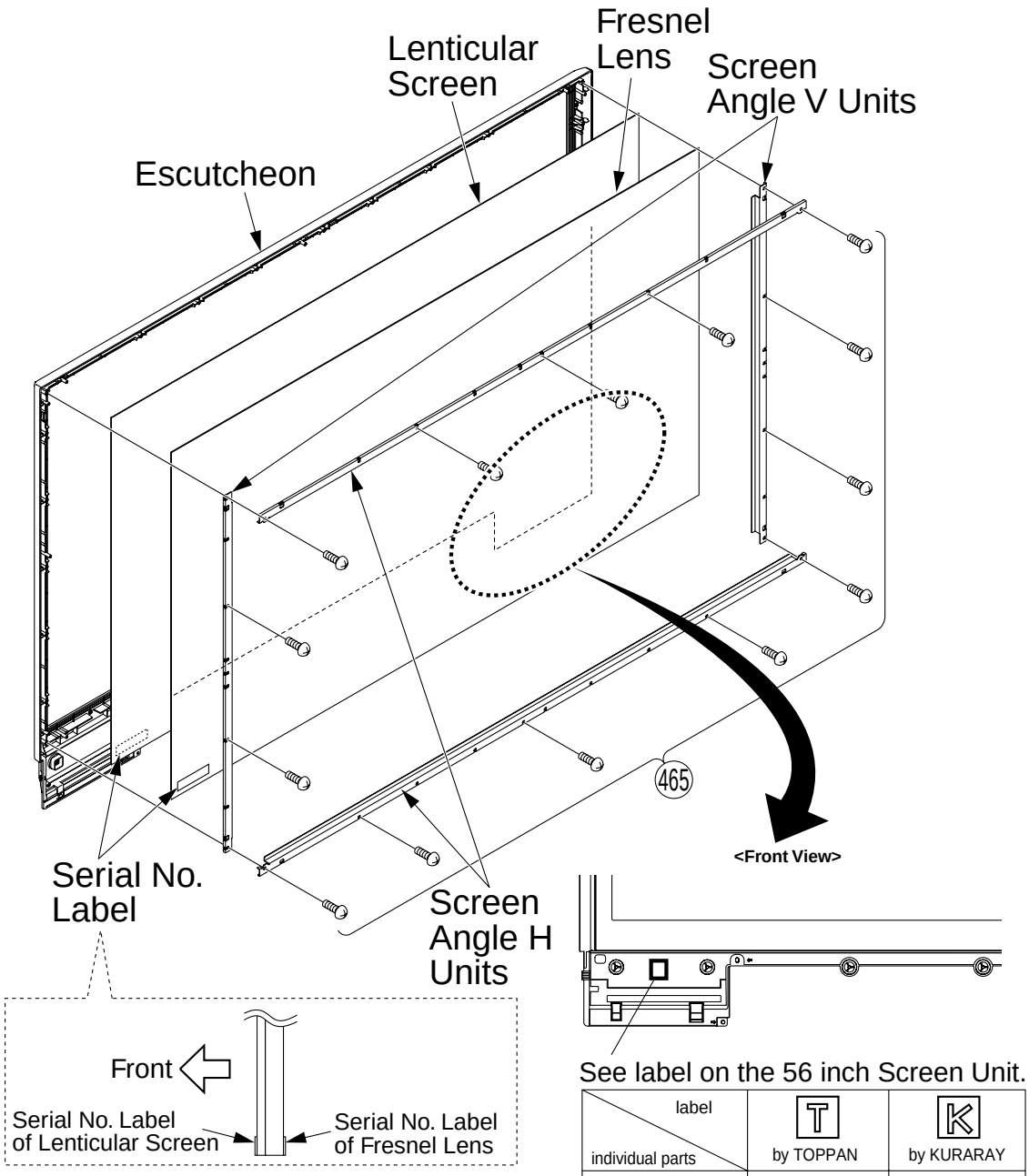

label / individual parts	T by TOPPAN	K by KURARAY
Fresnel Lens	LSGP0501	LSGP0547
Lenticular Screen	LSGP0502	LSGP0548
Screen Angle H Unit	LSXA0825	LSXA0830
Screen Angle V Unit	LSXA0826	LSXA0831

Fig. D5-2

Replacement Note for all Screen Units:
When replacing the Fresnel Lens and the Lenticular Screen, it is imperative that dust, etc., does not adhere between the Fresnel Lens and the Lenticular Screen. Due to this risk, it is strongly recommended to replace the Screen Unit as a unit.

Replacement Note for 56 inch Screen Unit:
Because there are two types of 56 inch Screen Units and individual parts contained in the Screen Unit are not compatible, a label (T or K) is indicated on the Screen Unit.
When servicing individual parts of a 56 inch Screen Unit, remove the Front Cover Unit and confirm the label on the Screen Unit. Then, order the correct parts according to the above chart.

This manual downloaded from http://www.manualowl.com

REMOVAL OF THE MIRROR FROM THE BACK COVER

1. Remove the Screen Unit. Refer to Steps 1 ~ 2 in "REMOVAL OF THE SCREEN UNIT FROM THE DISPLAY."
2. **(For 52 inch models)**
   1) Remove the 2 Mirror Holder H Units and the 2 Mirror Holder V Units by removing the 8 Screws (401).
   2) Remove the Mirror from the top by releasing the Back Cover slots.

   Note: The Mirror is fragile. Handle with extreme care.

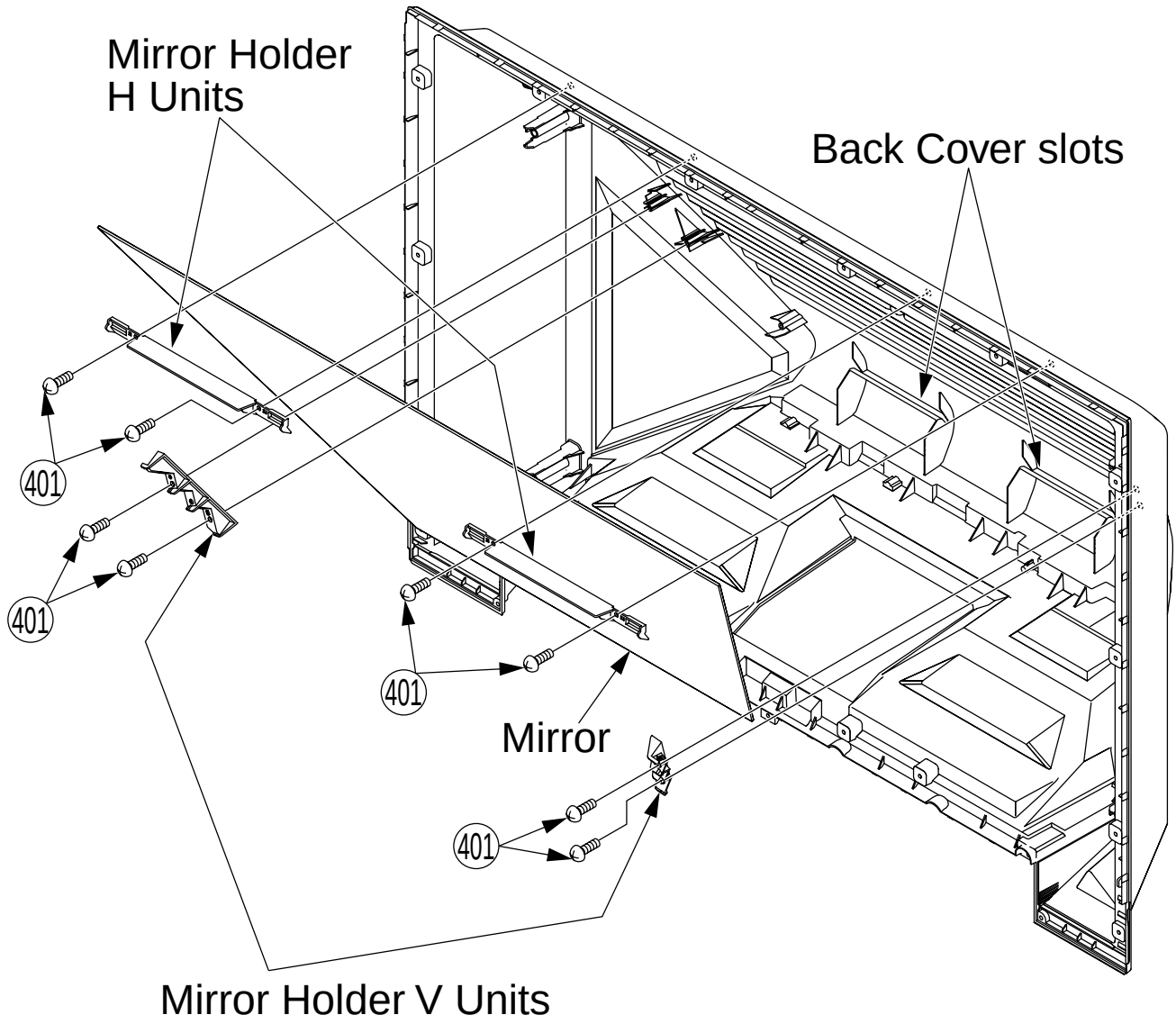

Fig. D6-1

Reassembly Notes for Mirror:
Install the Mirror using the following procedures:

1) Hold the edge of the Mirror, and insert the Mirror from the top into the Back Cover slots carefully. When handling the Mirror, do not touch the Mirror surface.
2) Install the 2 Mirror Holder H Units and the 2 Mirror Holder V Units on the Mirror and tighten the 8 Screws (401).

This manual downloaded from http://www.manualowl.com

(For 56/61 inch models)
1) Remove the 3 Mirror Holder H Units and the 2 Mirror Holder V Units by removing the 10 Screws (401).
2) Remove the Mirror from the top by releasing the Back Cover slots.

Note: The Mirror is fragile. Handle with extreme care.

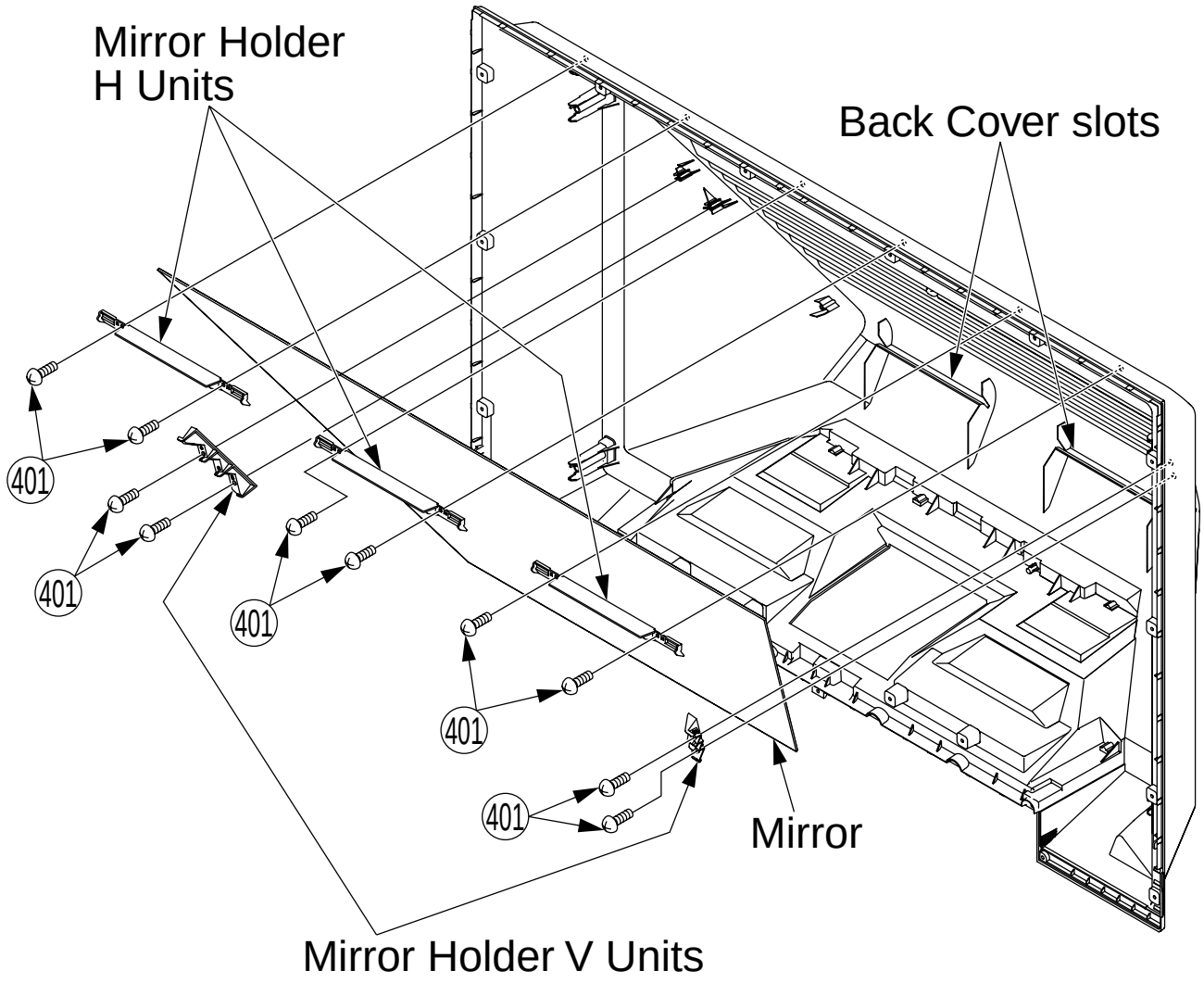

Fig. D6-2

Reassembly Notes for Mirror:
Install the Mirror using the following procedures:
1) Hold the edge of the Mirror, and insert the Mirror from the top into the Back Cover slots carefully.
   When handling the Mirror, do not touch the Mirror surface.
2) Install the 3 Mirror Holder H Units and the 2 Mirror Holder V Units on the Mirror and tighten the 10 Screws (401).

This manual downloaded from http://www.manualowl.com

REMOVAL OF THE POWER SWITCH P.C.B. FROM THE CABINET

1. Remove the Rear Cover Unit. Refer to Step 1 in "REMOVAL OF THE TV UNIT AND THE DIGITAL TUNER P.C.B. FROM THE CABINET."
2. 1) Remove the 2 Screws (465) and disconnect Connector CN6801.
   2) Remove the Power Switch P.C.B. from the rear.

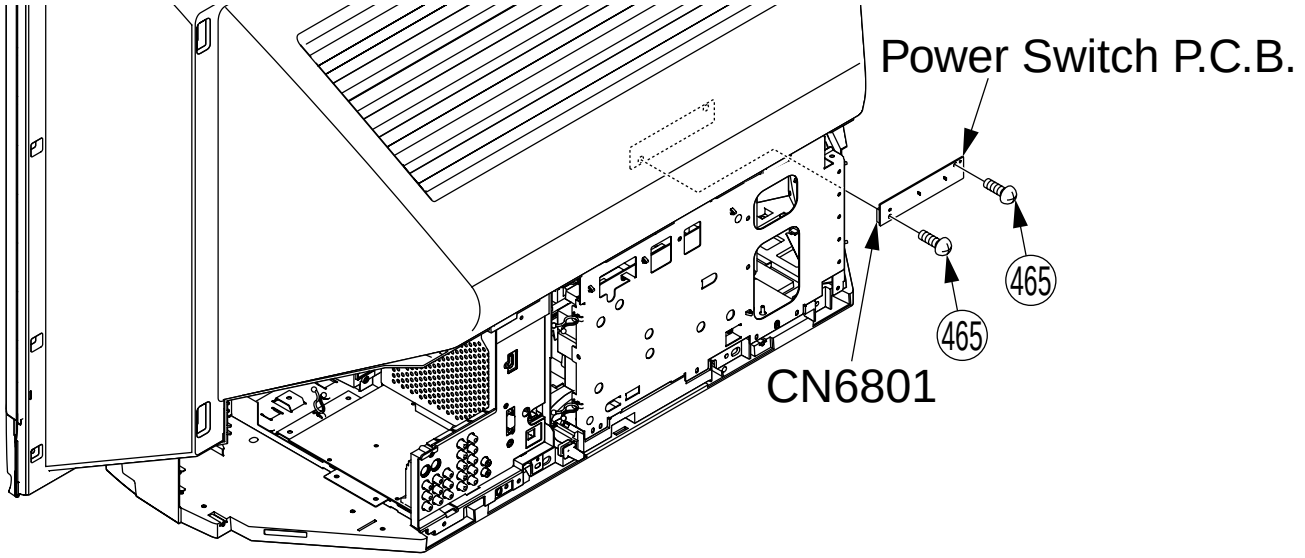

Fig. D7

This manual downloaded from http://www.manualowl.com

9 Measurements and Adjustments

9.1. Adjustment Procedures 1

WHEN INSTALLING THE PROJECTION UNIT OR THE BASE BODY UNIT INTO THE UNIT AT THE USER'S LOCATION:

The following ADJUSTMENT of the Projection Unit must be performed.

a. Focus Adjustment
   Note:
   The Focus Adjustment is not normally necessary when reinstalling.
   However, the Focus Adjustment should be performed when replacing the new Projection Unit or new Base Body Unit.
b. Mechanical Picture Position Adjustment
c. Electrical Picture Position Adjustment

Adjustment Preparation:

1. Install all parts except the Front Cover Unit
   Then, remove the Optical Cover by removing the Screw and 2 latch tabs.

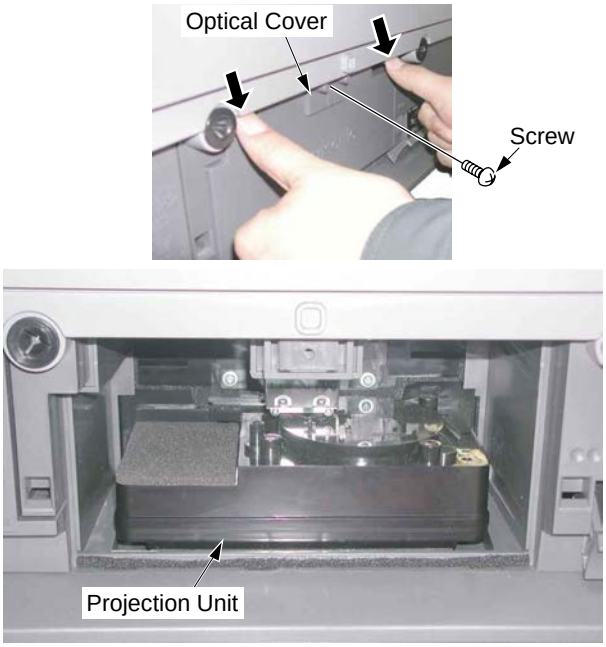

(With Front Cover Unit and Optical Cover removed)
<Front View>
Fig. M1-1

Note:
When the rear cover is disassembled, the screen can be moved back and forth, which could affect the video display vertical position. This could also cause the vertical adjust to be at or near its limit.
Only try the picture position adjustment with the rear cover assembled!

2. Turn the power on.
3. Press and hold the VOLUME DOWN button on the unit and the RECALL key on the remote for more than 5 seconds in power on condition. "WORK MODE" will appear on the screen.

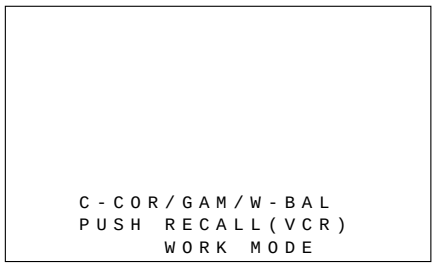

<Work Mode>
Fig. M1-2

4. Press the VCR key to go to VCR mode, then the RECALL key on the remote for more than 1 second. "FACTORY ADJUST" will appear on the screen.

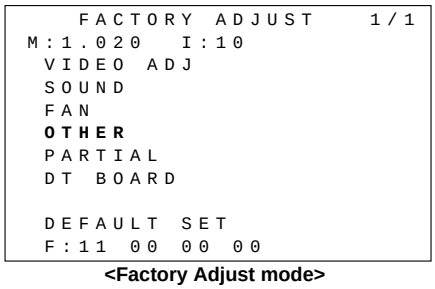

<Factory Adjust mode>
Fig. M1-3

5. Press the TV key to return to TV mode, then press the CH UP/DOWN key on the remote to select "OTHER" on menu and press the OK key. "OTHER" menu will appear.

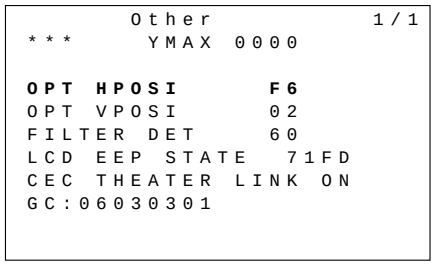

<Factory Adjust Mode>
(OTHER menu 1/1)
Fig. M1-4

6. Press the VOLUME UP/DOWN key on the remote. (Focus screen will appear.)

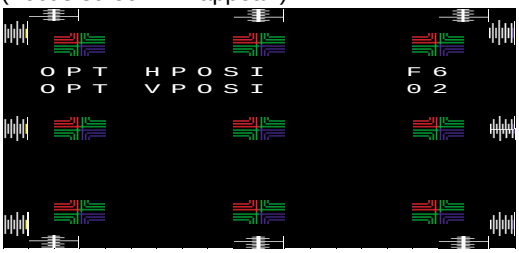

<Focus Screen>

To release this mode:

1. After completing the ADJUSTMENT, press the CH UP/DOWN key on the remote to return to the OTHER menu.
2. Press RECALL key twice to return to Work Mode, and press and hold the VOLUME DOWN button on the unit and the RECALL key on the remote for more than 5 seconds.
   Or, turn off the power.
3. Install the Optical Cover with the Screw and the Front Cover Unit.

This manual downloaded from http://www.manualowl.com

a. Focus Adjustment

1) Confirm that each of the pixels in the nine portions are clearly visible.

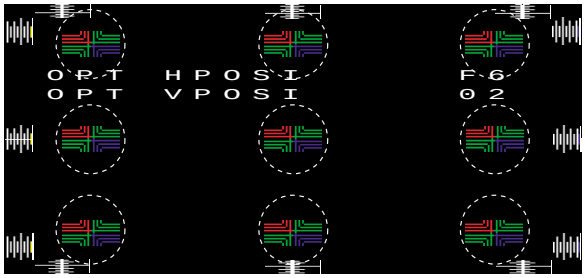

<Focus Screen>

2) If not, loosen the Knob on the Projection Lens until the Knob can be moved.

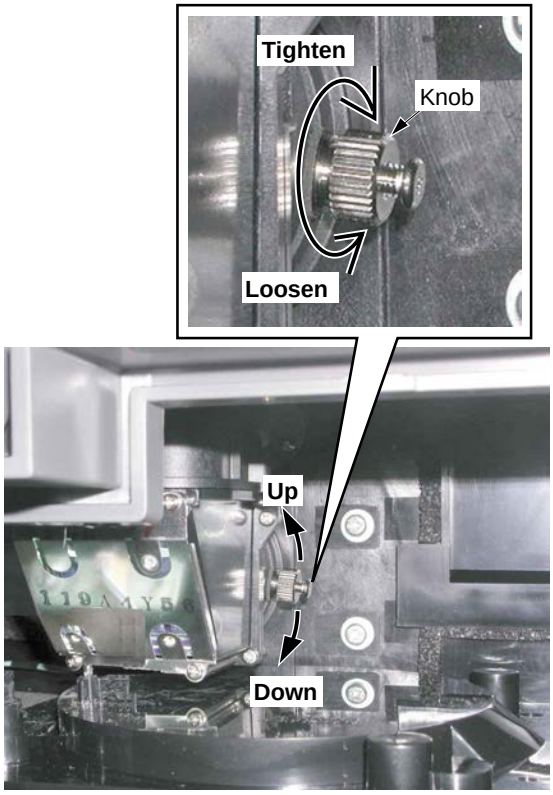

<Front View>

Fig. M1-6

3) Adjust the Knob by moving up or down so that each of the pixels in the nine portions is clearly visible to obtain the best focus.
4) Tighten the Knob.

b. Mechanical Picture Position Adjustment (Tilt)

1) Loosen the 4 Screws on the Projection Unit.

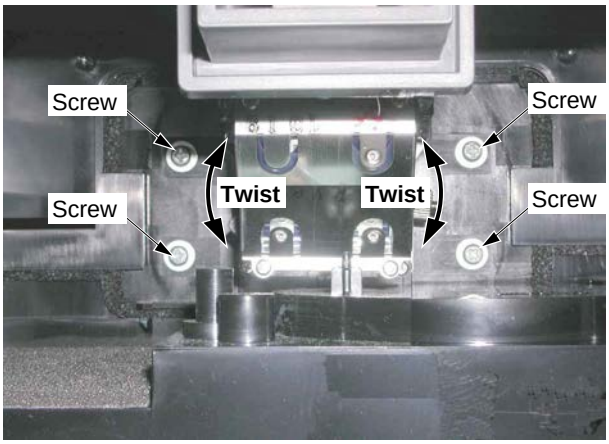

<Front View>

Fig. M1-5

2) Adjust the Projection Lens by twisting so that the long line "g" and the long line "h" are within 4 dots. (The long line "g" and the long line "h" will be almost aligned horizontally.)

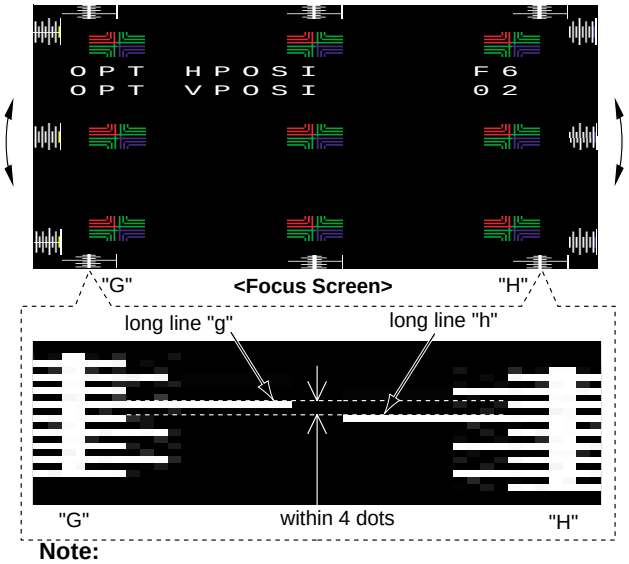

Note:
If the Projection Lens is twisted left, the Focus Screen twists left.
If the Projection Lens is twisted right, the Focus Screen twists right.

3) Tighten the 4 Screws while fixing the Projection Lens.

This manual downloaded from http://www.manualowl.com

c. Electrical Picture Position Adjustment

1) Adjust OPT HPOSI so that "C" is symmetrical to "D." by pressing the VOLUME UP/DOWN key on the remote to change the value.
2) Press the CH UP/DOWN key on the remote to return to the OTHER menu.
3) Select OPT VPOSI by pressing CH UP/DOWN key on the remote.
4) Adjust OPT VPOSI so that "A" is symmetrical to "B" by pressing the VOLUME UP/DOWN key on the remote to change the value.

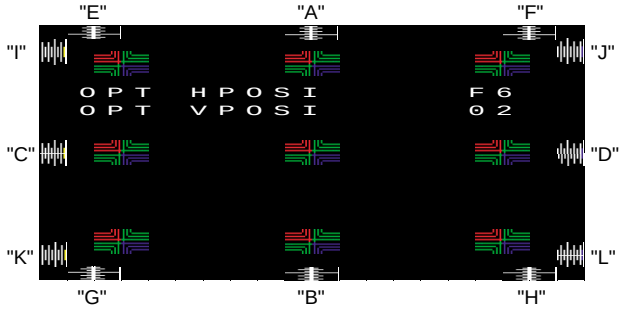

<Focus Screen>

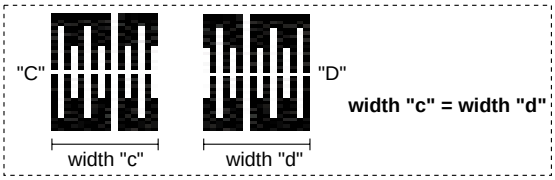

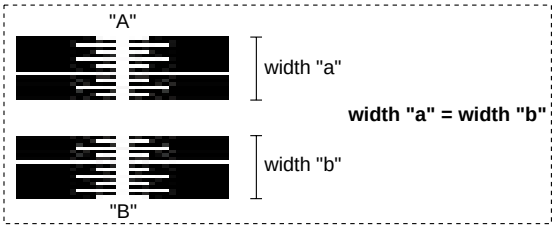

5) Confirm that all "A", "B", "C", "D", "E", "F", "G", "H", "I", "J", "K", "L" are each almost symmetrical.
6) If not, adjust the "OPT HPOSI" and "OPT VPOSI" (repeat steps 1-6) until the picture is in the correct position.
7) Press the CH UP/DOWN key on the remote to return to the OTHER menu.

This manual downloaded from http://www.manualowl.com

10 Maintenance

10.1. Cleaning Methods

THE SCREEN UNIT AND THE MIRROR

- THE SCREEN UNIT (Lenticular Screen, Fresnel Lens)

It is strongly recommended that the Lenticular Screen surface (outside) and the Fresnel Lens surface (inside) should be wiped gently with a clean, soft, dry cloth to remove the dirt.

Note:

1. If the dirt cannot be removed by wiping with a clean, soft, dry cloth, use a clean, soft, dry cloth moistened with diluted neutral pH liquid cleanser or a lens cleaner (usually containing a small amount of ethyl alcohol) and wipe lightly. Take care not to leave any streaks.
   Do not use cleaning materials containing methyl alcohol, acetone, or dichloromethane.
2. Use an air blower to clean the inner surface of the Lenticular Screen and the outer surface of the Fresnel Lens (the surfaces that one another). These surfaces must not be wiped with a cloth.

- THE MIRROR

Remove any dirt with an air blower or wipe with a clean, soft, dry cloth. If wiped too forcefully, the surface of the Mirror can be damaged. If wiping with a clean, dry cloth does not remove the dirt, the Mirror must be replaced.

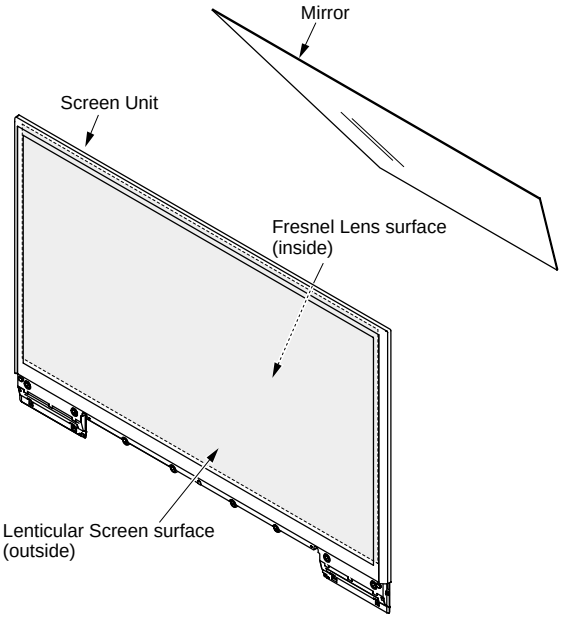

Fig. 6-1

THE LAMP

Gently wipe the surface of the glass of the Lamp with cleaning paper or soft cloth.

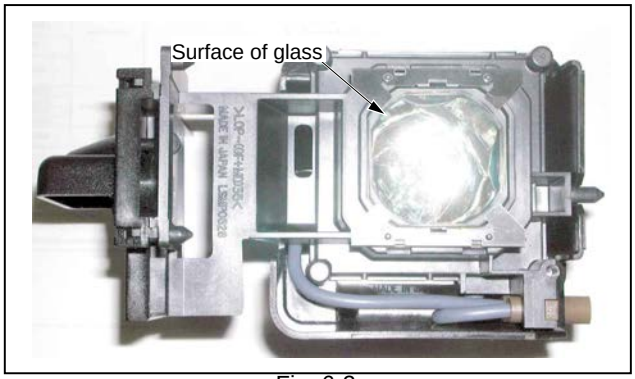

Fig. 6-2

THE FILTER ON THE PROJECTION UNIT

CAUTION:

Operating with torn or damaged Air Filter may cause damage to the Projection unit.

Remove the Projection Unit from rear. Then, clean the filters on the Projection Unit. Gently remove any accumulated dust from filter with a vacuum cleaner; use extreme care so as not to damage or tear the filters.

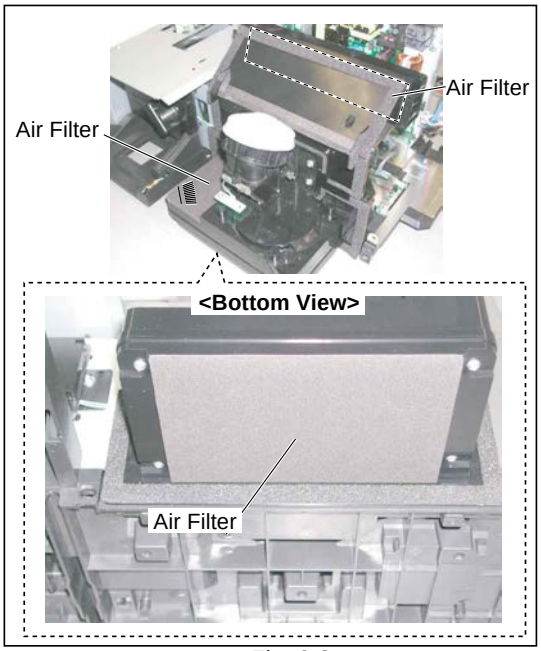

Fig. 6-3

THE PROJECTION LENS

Use lens cleaning paper and cleaner available at your local camera shop, etc. Dampen the cleaning paper with cleaner and gently wipe the surface of the lens from the center outward to remove dust.

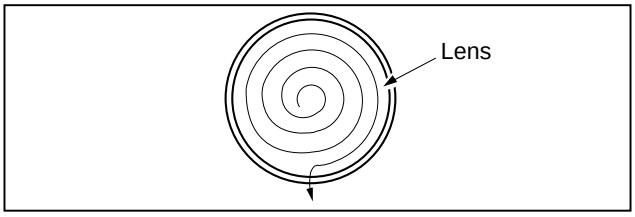

Fig. 6-4

This manual downloaded from http://www.manualowl.com

11 Block Diagrams

OVERALL BLOCK DIAGRAM

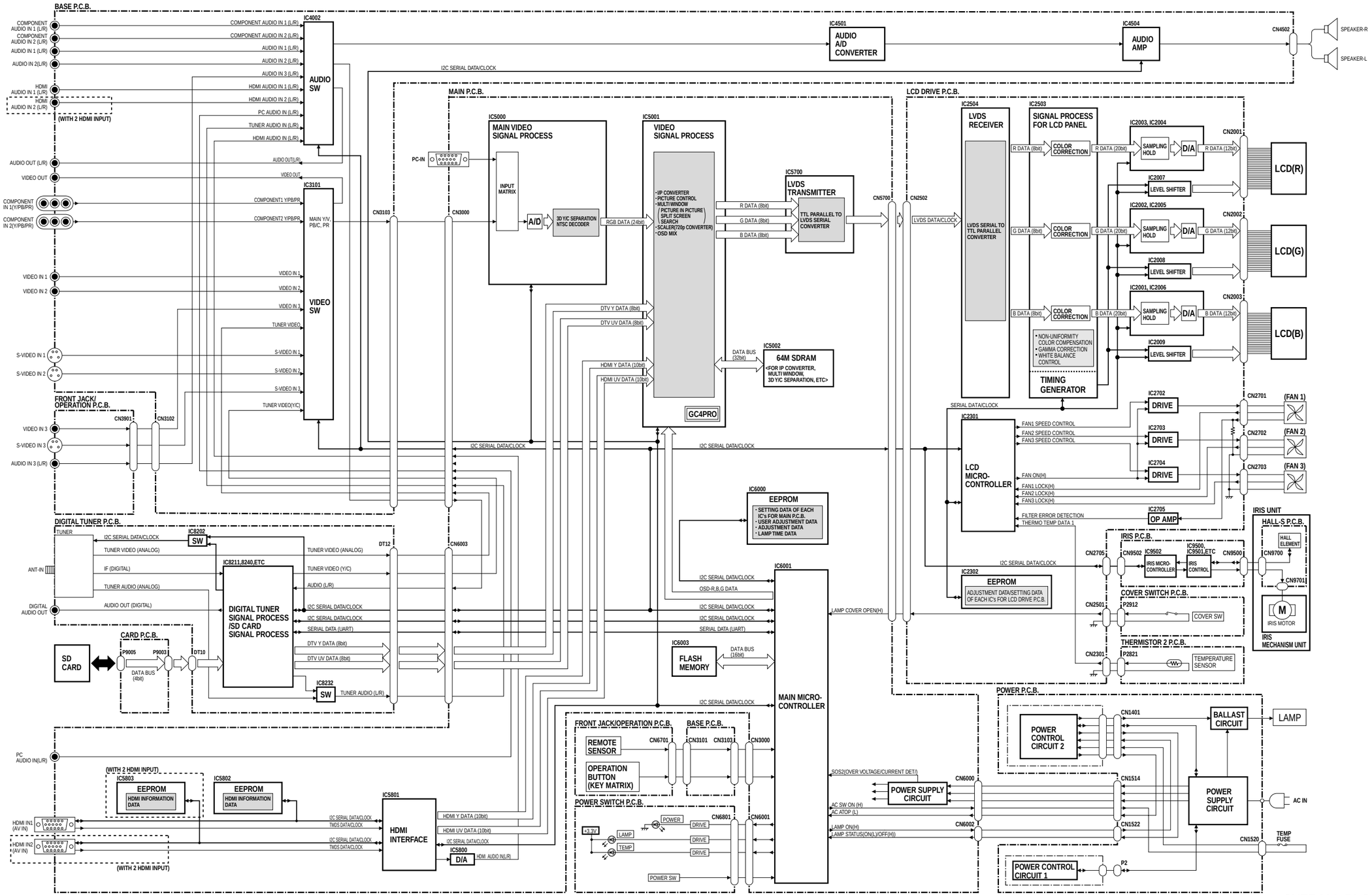

OVERALL BLOCK DIAGRAM
PT-52LCX66/PT-56LCX66/PT-61LCX66/PT-52LCX16/PT-56LCX16

This manual downloaded from http://www.manualowl.com

POWER SUPPLY BLOCK DIAGRAM (1/2)

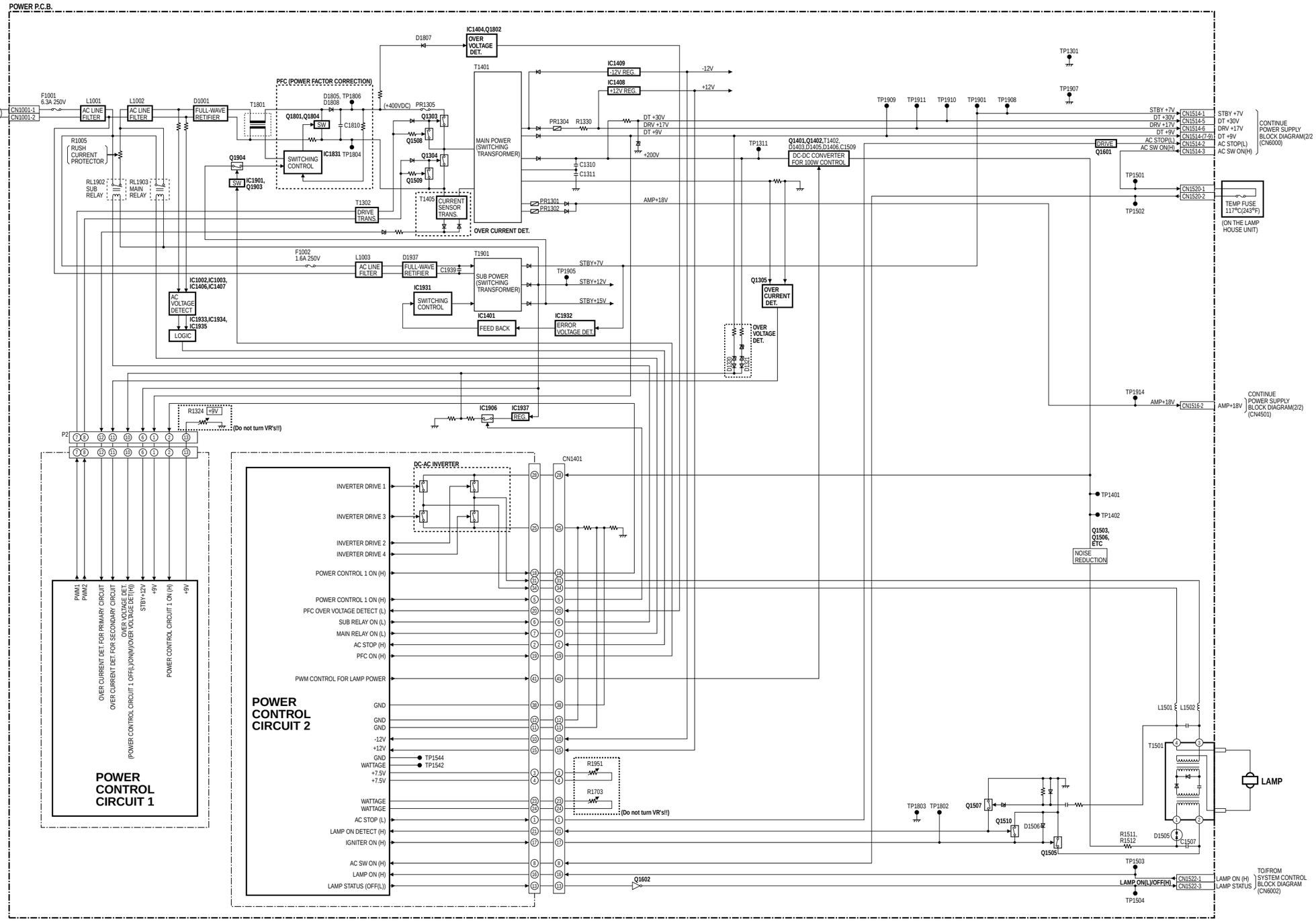

POWER SUPPLY BLOCK DIAGRAM (1/2)

PT-52LCX66/PT-56LCX66/PT-61LCX66/PT-52LCX16/PT-56LCX16

This manual downloaded from http://www.manualowl.com

POWER SUPPLY BLOCK DIAGRAM (2/2)

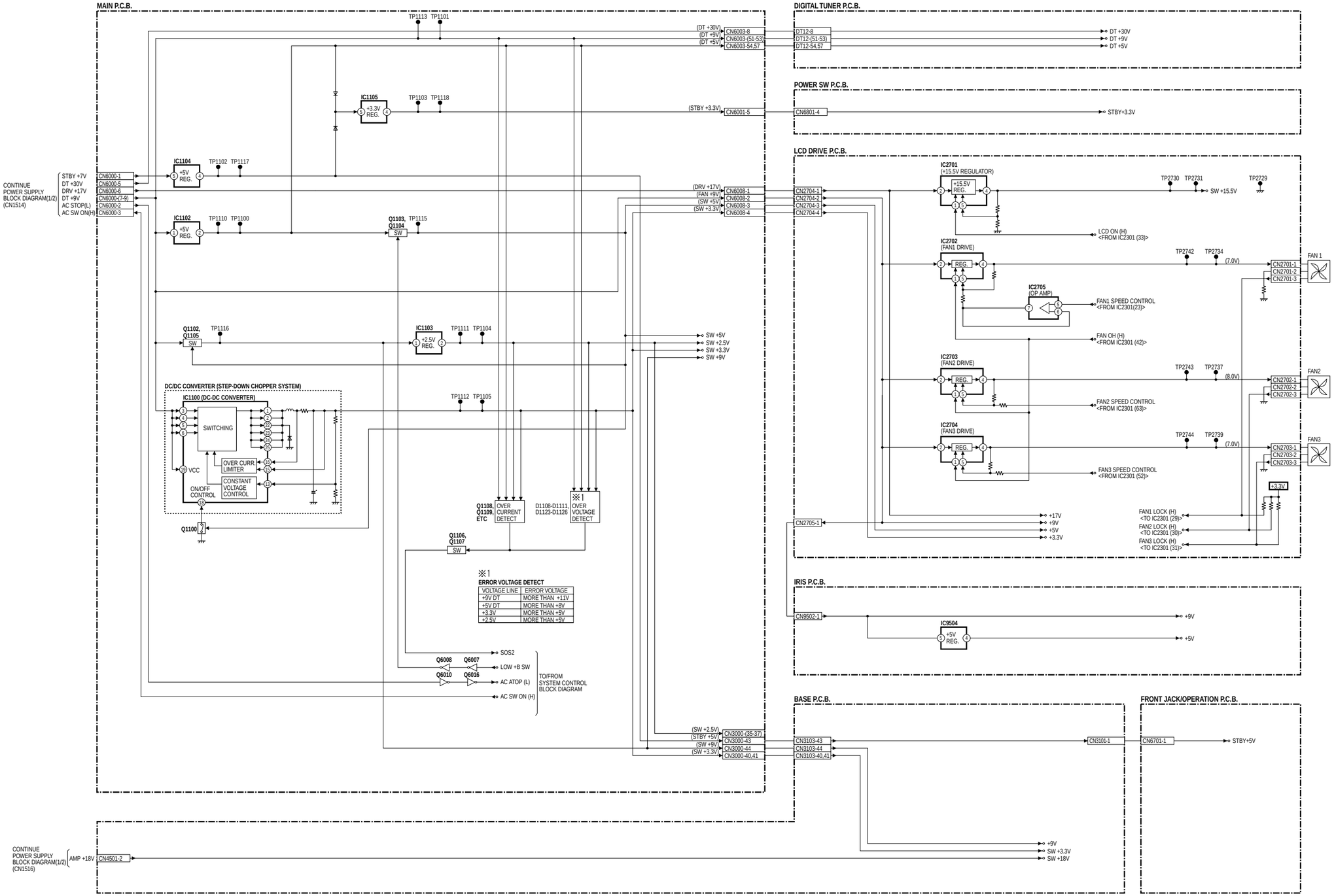

POWER SUPPLY BLOCK DIAGRAM (2/2)

PT-52LCX66/PT-56LCX66/PT-61LCX66/PT-52LCX16/PT-56LCX16

This manual downloaded from http://www.manualowl.com

VIDEO SIGNAL PATH I BLOCK DIAGRAM (1/2)

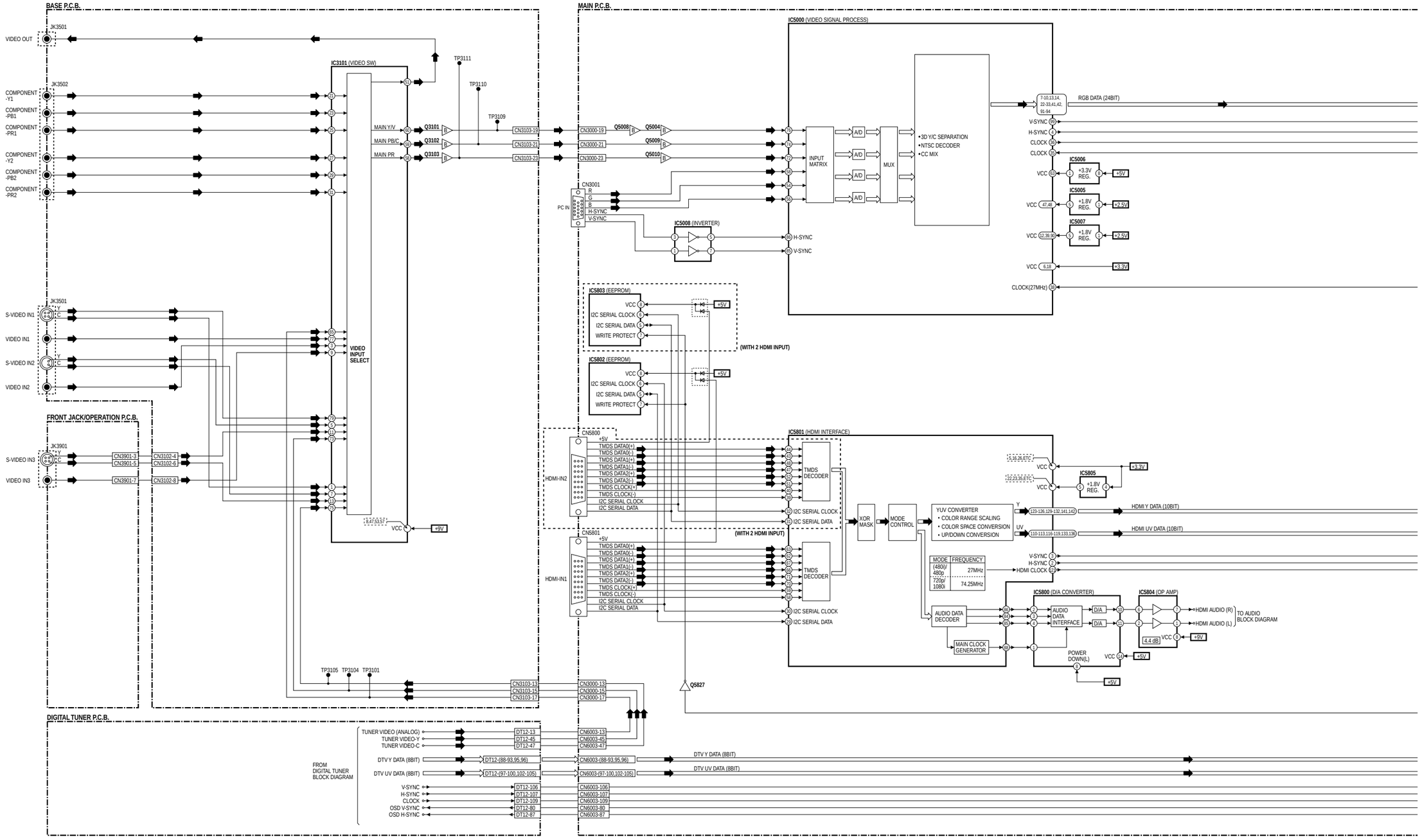

VIDEO SIGNAL PATH I BLOCK DIAGRAM (1/2)
PT-52LCX66/PT-56LCX66/PT-61LCX66/PT-52LCX16/PT-56LCX16

This manual downloaded from http://www.manualowl.com

VIDEO SIGNAL PATH I BLOCK DIAGRAM (2/2)

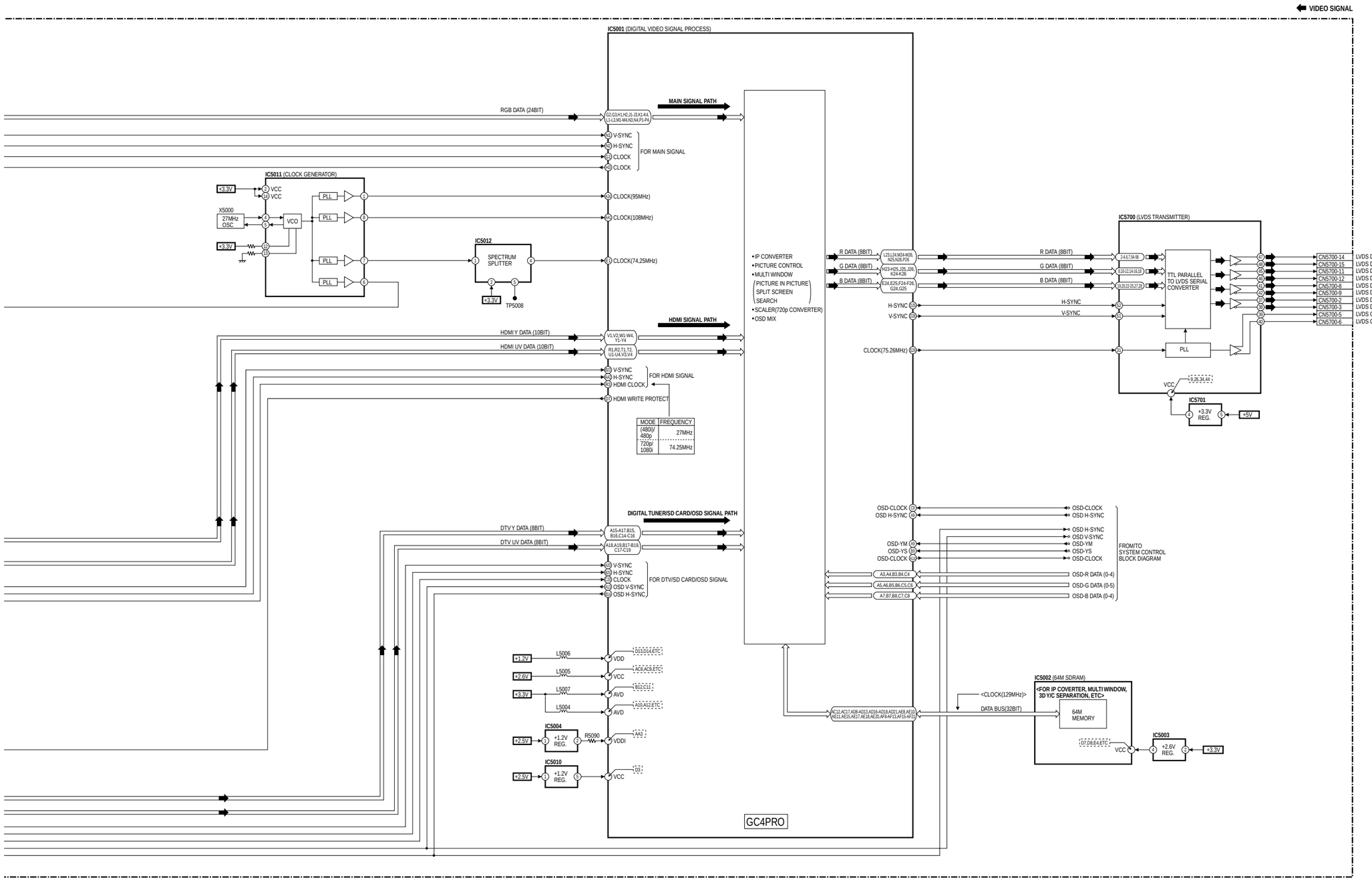

This manual downloaded from http://www.manualowl.com

VIDEO SIGNAL PATH II BLOCK DIAGRAM

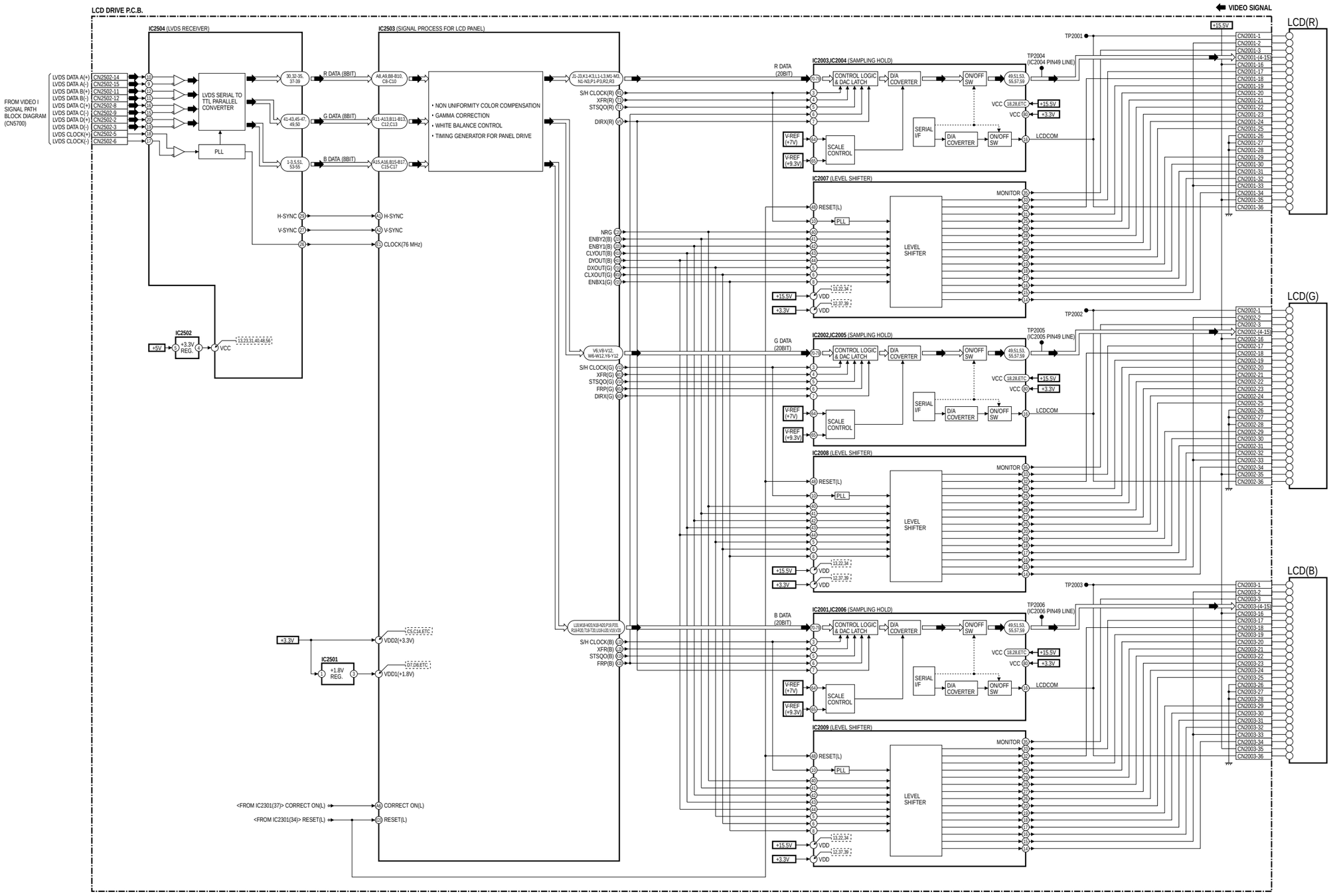

VIDEO SIGNAL PATH II BLOCK DIAGRAM

PT-52LCX66/PT-56LCX66/PT-61LCX66/PT-52LCX16/PT-56LCX16

This manual downloaded from http://www.manualowl.com

AUDIO SIGNAL PATH BLOCK DIAGRAM

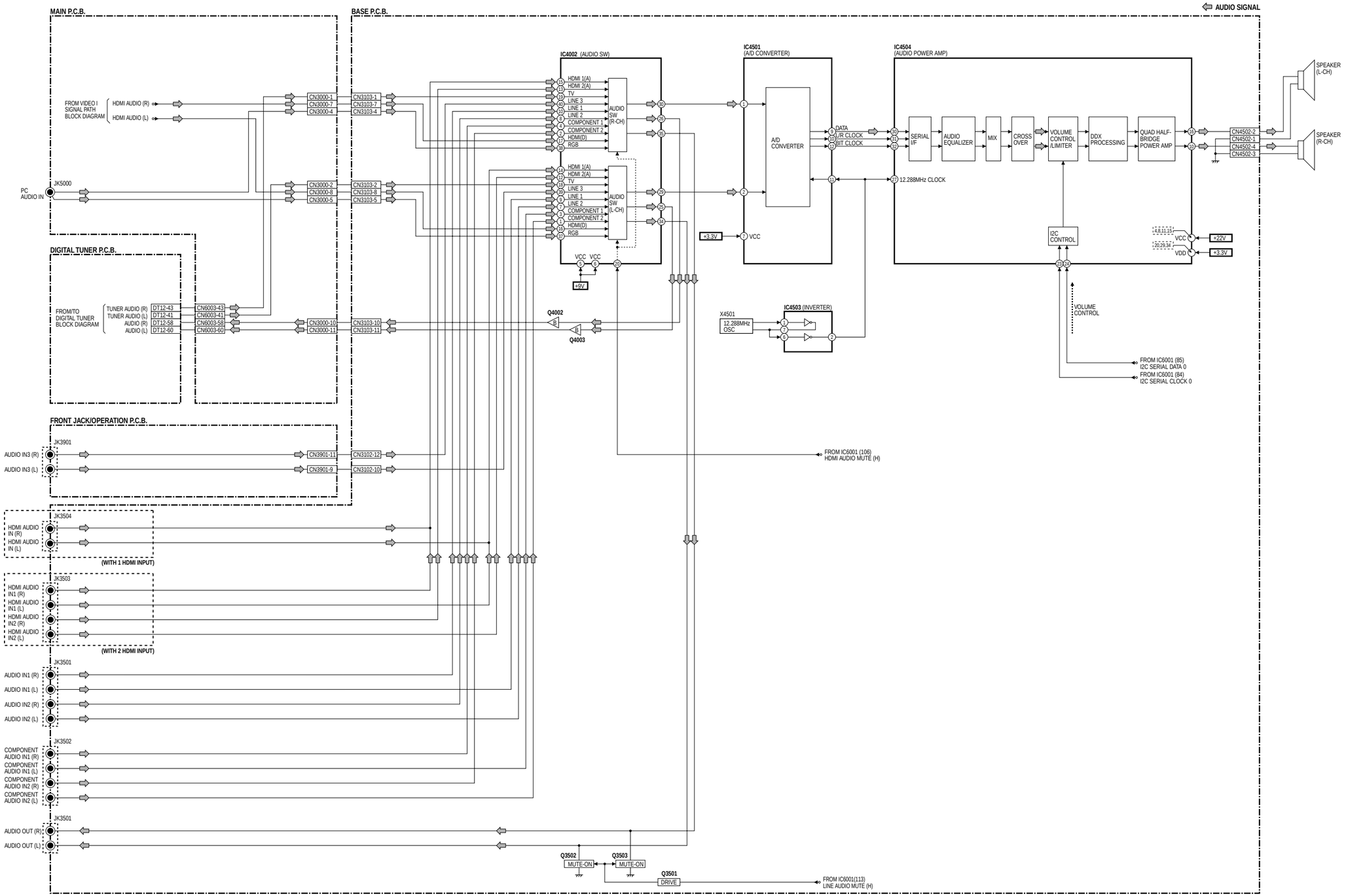

AUDIO SIGNAL PATH BLOCK DIAGRAM
PT-52LCX66/PT-56LCX66/PT-61LCX66/PT-52LCX16/PT-56LCX16

This manual downloaded from http://www.manualowl.com

SYSTEM CONTROL BLOCK DIAGRAM

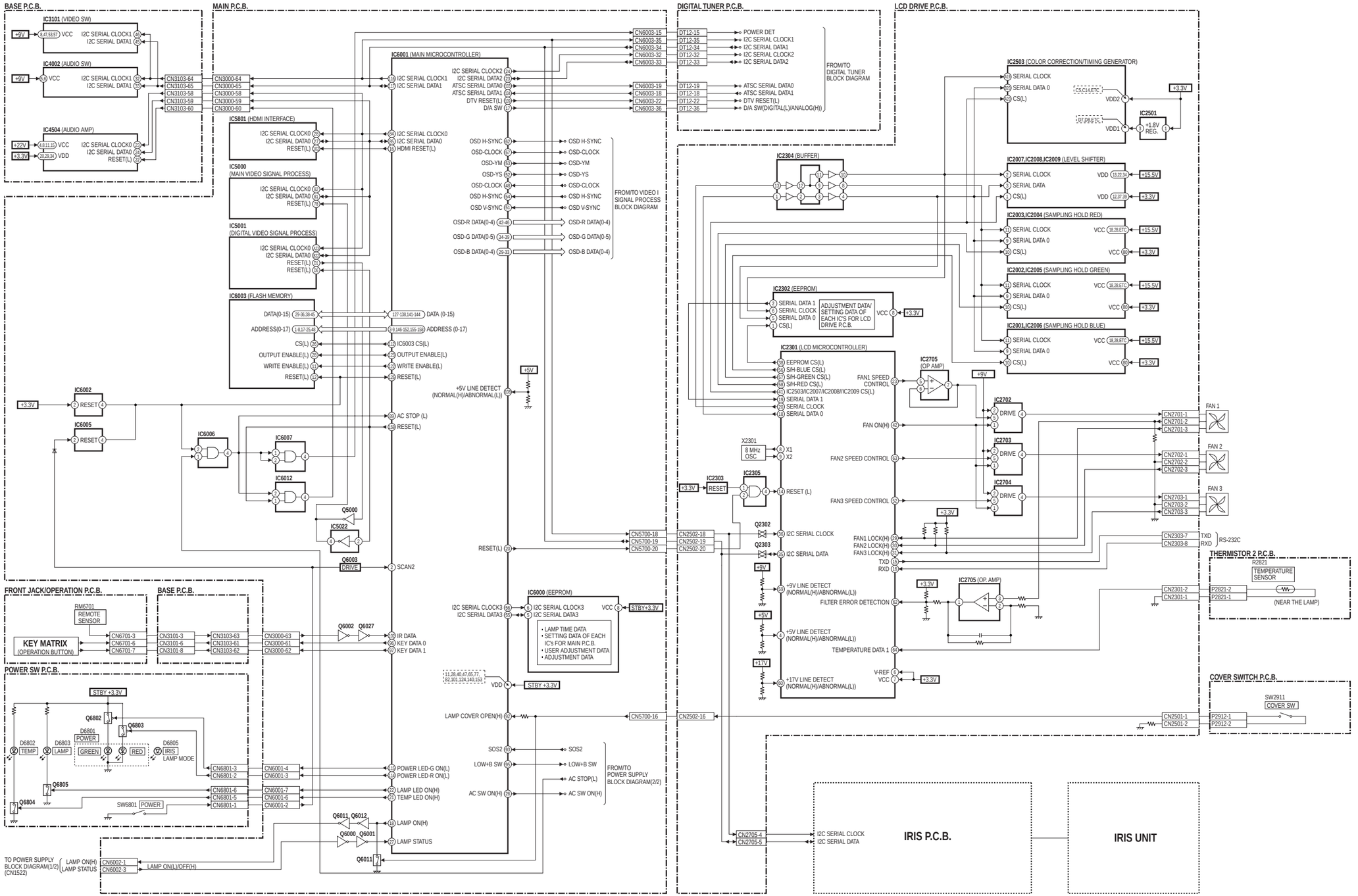

SYSTEM CONTROL BLOCK DIAGRAM

PT-52LCX66/PT-56LCX66/PT-61LCX66/PT-52LCX16/PT-56LCX16

This manual downloaded from http://www.manualowl.com

OPTICAL BLOCK DIAGRAM

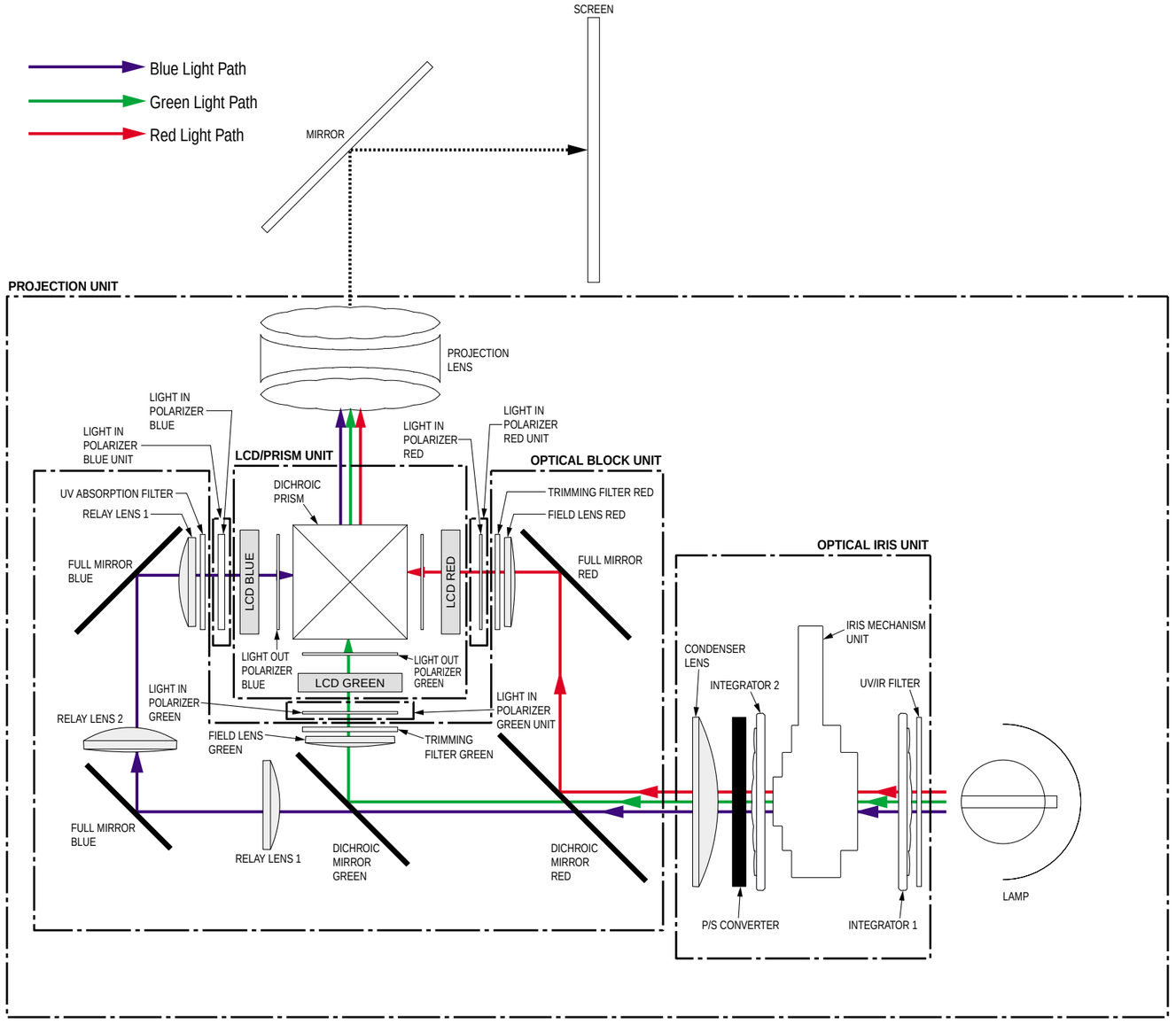

This manual downloaded from http://www.manualowl.com

This manual downloaded from http://www.manualowl.com

12 Schematic Diagrams

12.1. SCHEMATIC DIAGRAM AND CIRCUIT BOARD LAYOUT NOTES

1. **Important safety notice**
   Components identified by the sign ⚠ have special characteristics important for safety. When replacing any of these components. Use only the specified parts.

2. Do not use the part number shown on this drawing for ordering.
   The correct part number and part value is shown in the parts list, and may be slightly different or amended since this drawing was prepared.

3. Use only original replacement parts:
   To maintain original function and reliability of repaired units, use only original replacement parts which are listed with their part numbers in the parts list section of the service manual.

4. Parts different in shape or size may be used.
   However, only interchangeable parts will be supplied as service replacement parts.

5. Test point information
   ● : Test point with a jumper wire across a hole in P.C.B.
   ○ : Test point with no test pin.

Schematic Diagram Notes

1. Indication for Zener Voltage of Zener Diodes
   The Zener Voltage of Zener Diodes are indicated as such on Schematic Diagrams.

   Example:
   (6.2V).....Zener Voltage

2. How to identify Connectors
   Each connector is labeled with a Connector No. and Pin No. Indicating what it is connected to,
   in other words, its counter part.
   Use the interconnection schematic diagram to find the connection between associated connectors.

   Example:
   The connections between P.C.B.s are shown below.

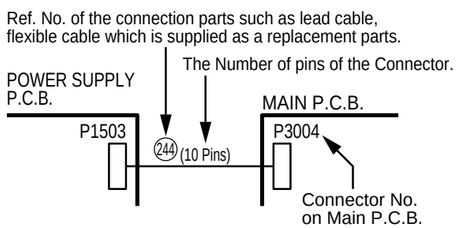

3. Parts marked "PT" are not used in any models included in this service model.

Example: 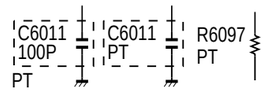

4. Jumper wires are used for WA10, WA5 etc and these are not supplied as replacement parts.

Circuit Board Layout Note

Circuit Board Layout shows components installed for various models.
For proper parts content for the model you are servicing, please refer to the schematic diagram and parts list.

NOTE:
Circuit Board Layout includes components which are not used.

Model No. Identification Mark

COMPARISON CHART OF MODELS & MARKS

MODEL	MARK
PT-52LCX66	A
PT-56LCX66	B
PT-61LCX66	C
PT-52LCX16	D
PT-56LCX16	E
Not Used	PT

Note : Refer to item 3 of Schematic Diagram Notes for mark "PT".

This manual downloaded from http://www.manualowl.com

12.2. INTERCONNECTION SCHEMATIC DIAGRAM

INTERCONNECTION SCHEMATIC DIAGRAM

IMPORTANT SAFETY NOTICE:
COMPONENTS IDENTIFIED BY THE SIGN ⚠ HAVE SPECIAL CHARACTERISTICS IMPORTANT FOR SAFETY. WHEN REPLACING ANY OF THESE COMPONENTS, USE ONLY THE SPECIFIED PARTS.

NOTE:
FOR SCHEMATIC DIAGRAM AND CIRCUIT BOARD LAYOUT NOTES, REFER TO BEGINNING OF SCHEMATIC SECTION.

NOTE:
THE LAMP UNIT IS NOT SUPPLIED AS A REPLACEMENT PART. WHEN REPLACING, REPLACE THE LAMP UNIT WHICH IS SUPPLIED AS A OPTIONAL ACCESSORY.

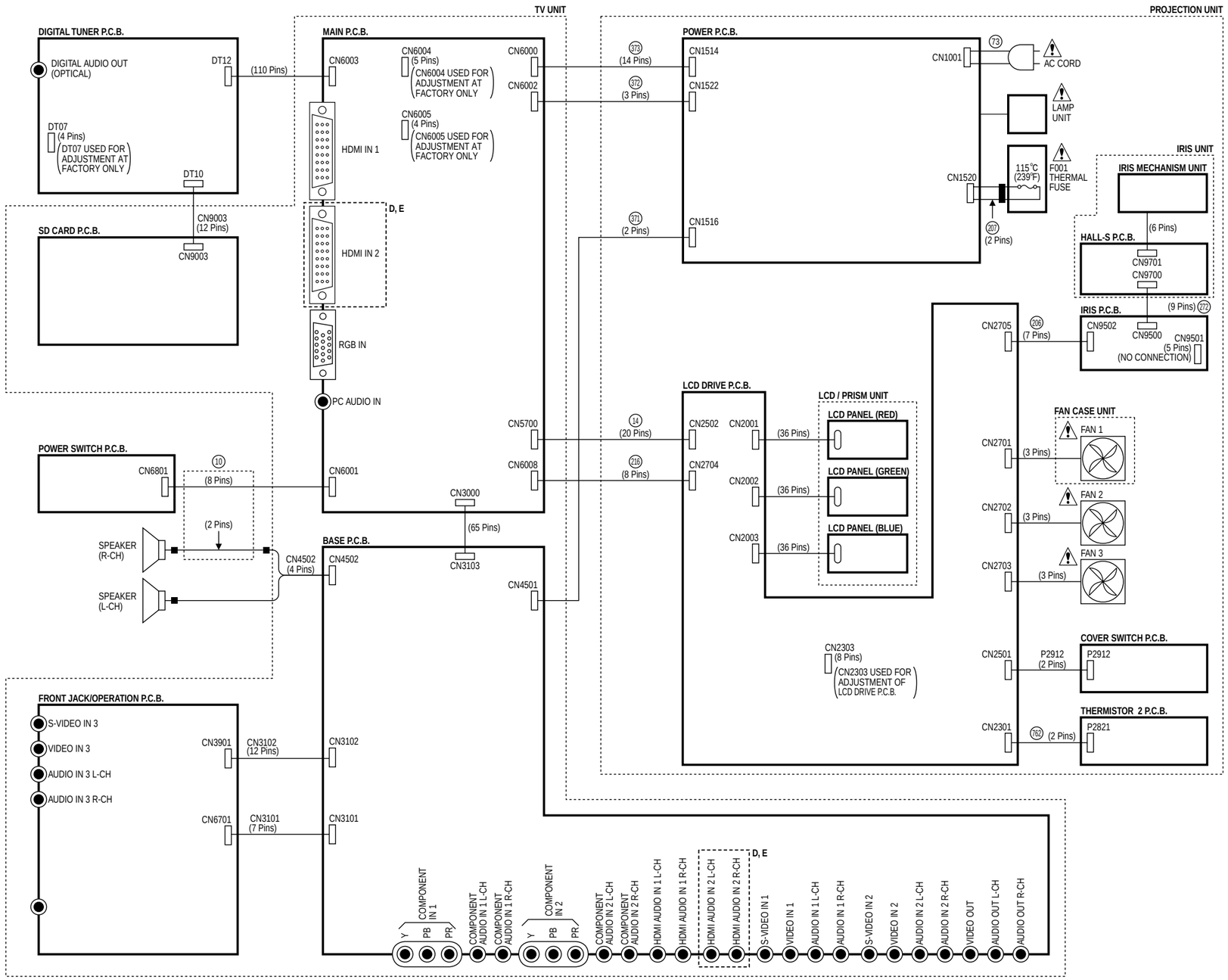

COMPARISON CHART OF MODELS & MARKS

MODEL	MARK
PT-52LCX66	A
PT-56LCX66	B
PT-61LCX66	C
PT-52LCX16	D
PT-56LCX16	E

INTERCONNECTION SCHEMATIC DIAGRAM
PT-52LCX66/PT-56LCX66/PT-61LCX66/PT-52LCX16/PT-56LCX16

This manual downloaded from http://www.manualowl.com

12.3. FRONT JACK / OPERATION SCHEMATIC DIAGRAM

FRONT JACK / OPERATION SCHEMATIC DIAGRAM

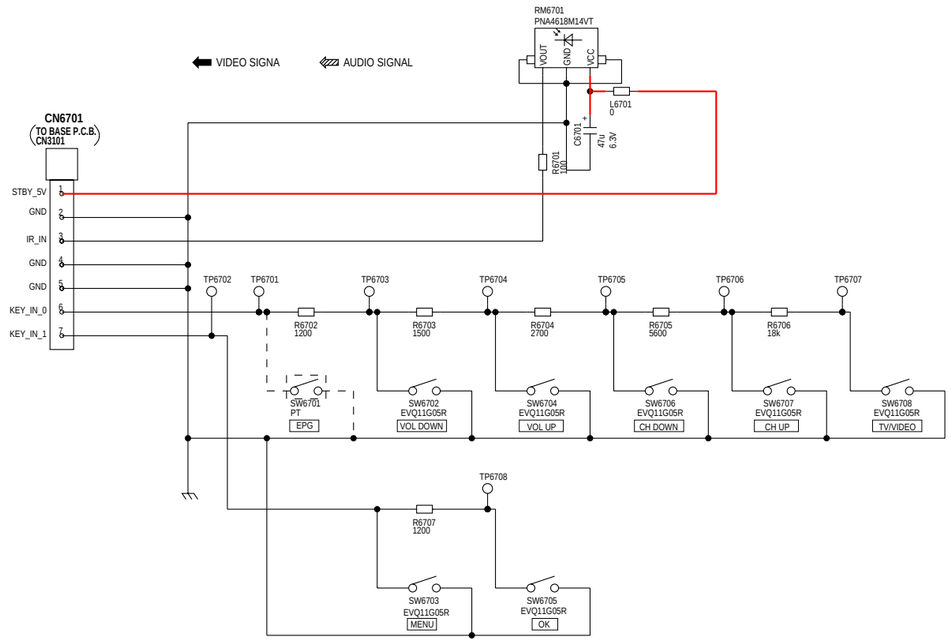

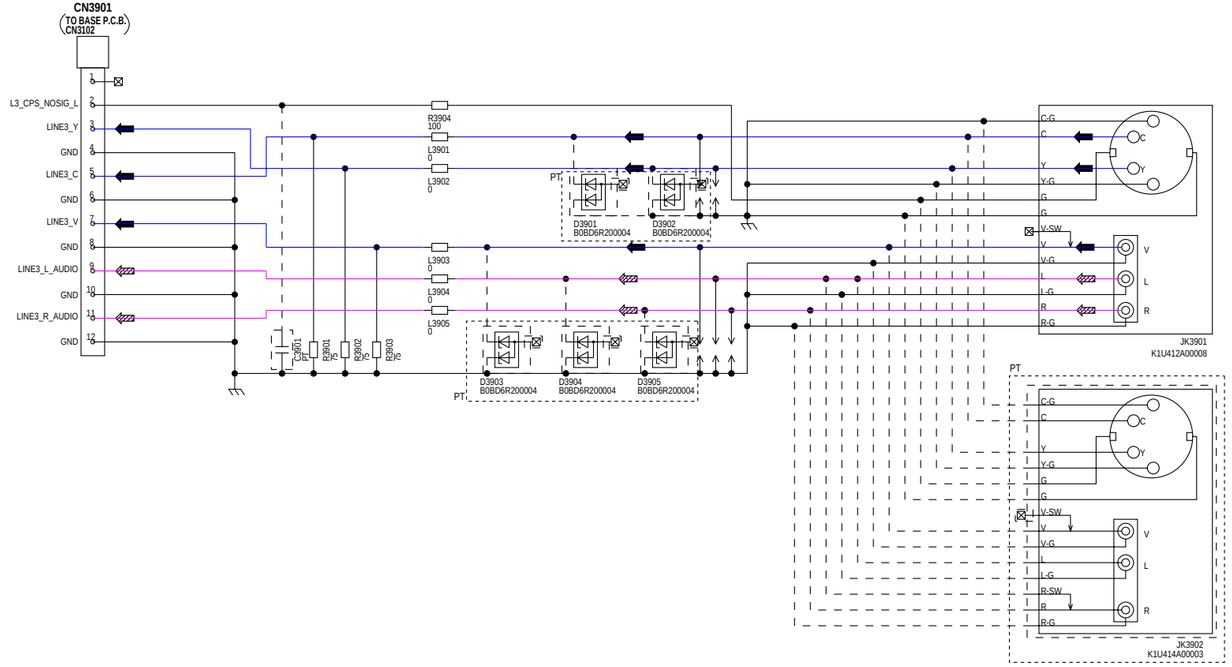

NOTE: For placing a purchase order of the parts, be sure to use the part number listed in the parts list. Do not use the part number on this diagram.

NOTE:
FOR SCHEMATIC DIAGRAM AND CIRCUIT BOARD LAYOUT NOTES, REFER TO BEGINNING OF SCHEMATIC SECTION.

NOTE:
PARTS MARKED "PT" ARE NOT USED.

LSJB3200
FRONT JACK / OPERATION SCHEMATIC DIAGRAM
PT-52LCX66/PT-56LCX66/PT-61LCX66/PT-52LCX16/PT-56LCX16

This manual downloaded from http://www.manualowl.com

12.4. POWER SWITCH / THERMISTOR 2 / COVER SWITCH SCHEMATIC DIAGRAMS

NOTE: For placing a purchase order of the parts,
be sure to use the part number listed in the parts list.
Do not use the part number on this diagram.

NOTE:
FOR SCHEMATIC DIAGRAM AND CIRCUIT BOARD LAYOUT NOTES,
REFER TO BEGINNING OF SCHEMATIC SECTION.

NOTE:
PARTS MARKED "PT" ARE NOT USED.

IMPORTANT SAFETY NOTICE:
COMPONENTS IDENTIFIED BY THE SIGN ⚠ HAVE
SPECIAL CHARACTERISTICS IMPORTANT FOR SAFETY.
WHEN REPLACING ANY OF THESE COMPONENTS,
USE ONLY THE SPECIFIED PARTS.

COVER SWITCH SCHEMATIC DIAGRAM

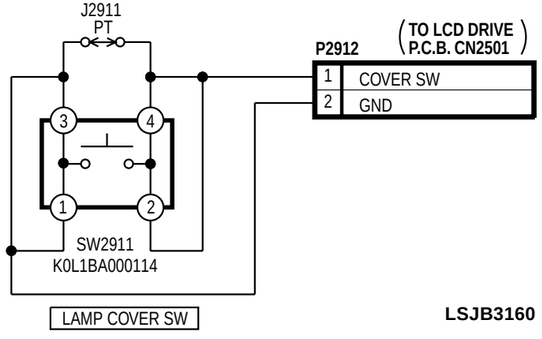

LSJB3160

THERMISTOR 2 SCHEMATIC DIAGRAM

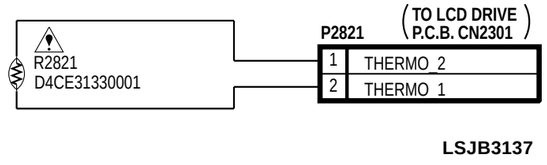

LSJB3137

POWER SWITCH SCHEMATIC DIAGRAM

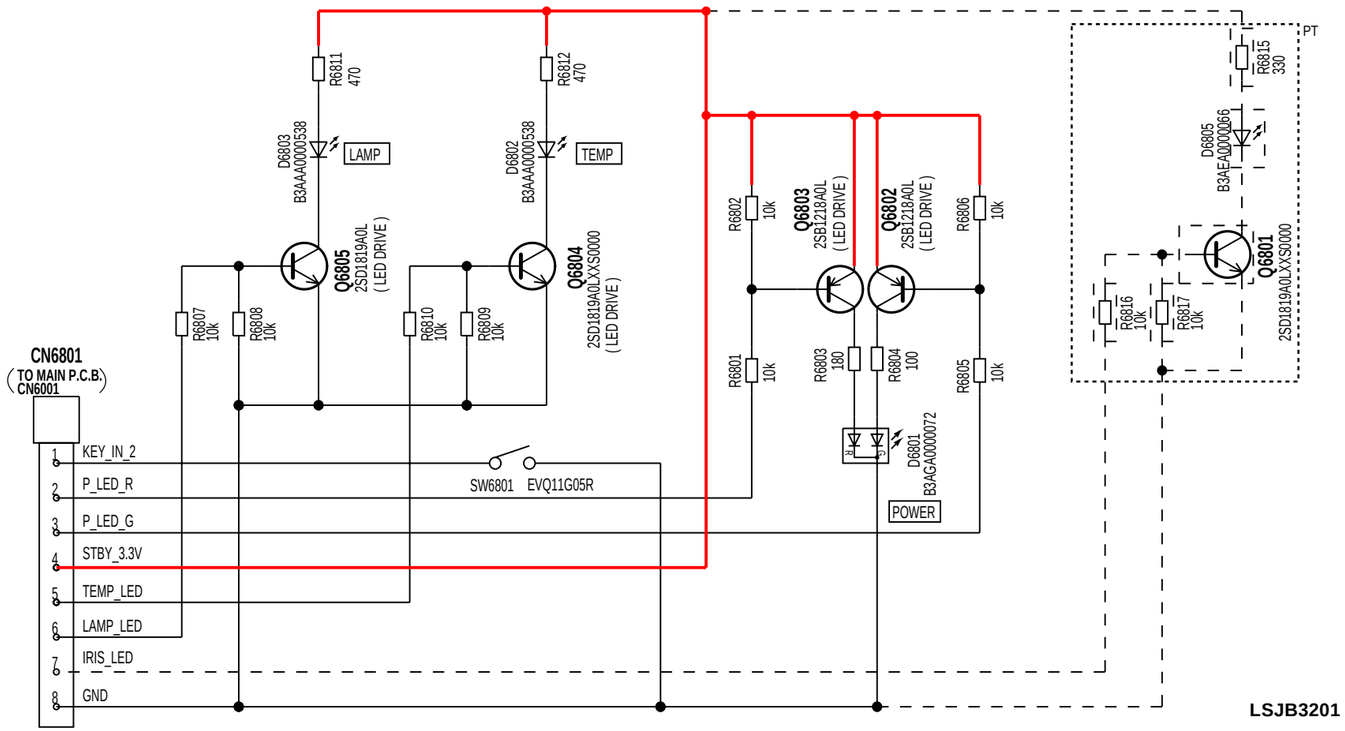

LSJB3201

LINK TO VOLTAGE CHART
COVER SWITCH SCHEMATIC DIAGRAM
POVER SWITCH SCHEMATIC DIAGRAM
THERMISTOR 2 SCHEMATIC DIAGRAM
PT-52LCX66/PT-56LCX66/PT-61LCX66/PT-52LCX16/PT-56LCX16

This manual downloaded from http://www.manualowl.com

12.5. VOLTAGE CHART

NOTE:
FOR SCHEMATIC DIAGRAM AND CIRCUIT BOARD LAYOUT NOTES,
REFER TO BEGINNING OF SCHEMATIC SECTION.

POWER SWITCH P.C.B.

PIN NO.	VOLTAGE
Q6802	
E	3.4
C	3.2
B	2.6
Q6803	
E	3.4
C	-1.5
B	3.4
Q6804	
E	0
C	3.3
B	0
Q6805	
E	0
C	3.3
B	0
CN6801	
1	---
2	3.3
3	0.3
4	3.4
5	0
6	0
7	0.1
8	0

This manual downloaded from http://www.manualowl.com

This manual downloaded from http://www.manualowl.com

13 Printed Circuit Board

13.1. FRONT JACK / OPERATION P.C.B. / POWER SWITCH P.C.B. / THERMISTOR 2 P.C.B. / COVER SWITCH P.C.B.

NOTE:
FOR SCHEMATIC DIAGRAM AND CIRCUIT BOARD LAYOUT NOTES, REFER TO BEGINNING OF SCHEMATIC SECTION.

NOTE:
CIRCUIT BOARD LAYOUT INCLUDES COMPONENTS WHICH ARE NOT USED.
PLEASE REFER TO THE SCHEMATIC DIAGRAM AND PARTS LIST FOR PROPER PARTS CONTENT.

FRONT JACK / OPERATION P.C.B. LSEP3200A

(COMPONENT SIDE)

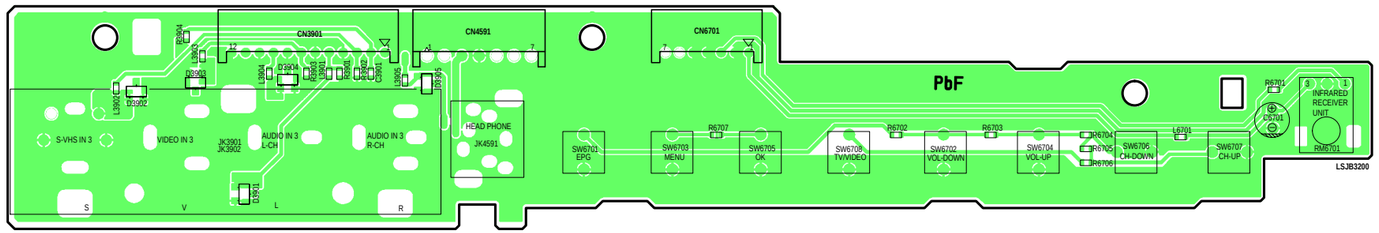

(DUAL PATTERNS)

(FOIL SIDE)

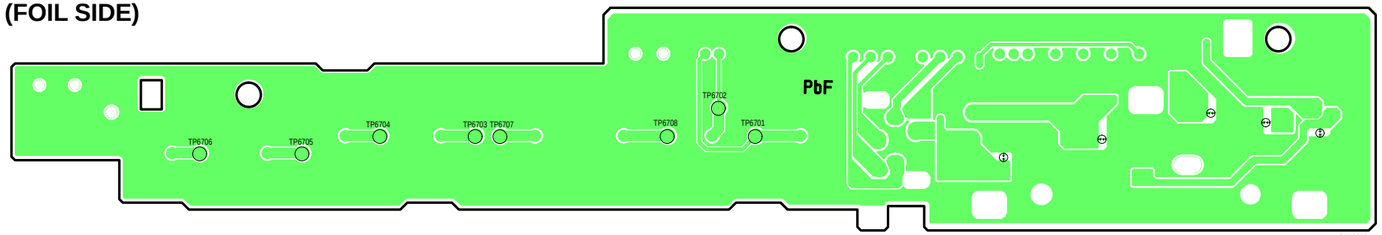

(DUAL PATTERNS)

POWER SWITCH P.C.B. LSEP3201A

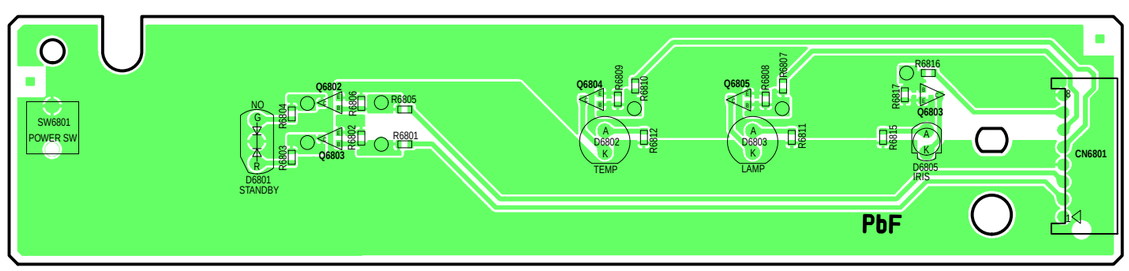

COVER SWITCH P.C.B. LSEP3160A

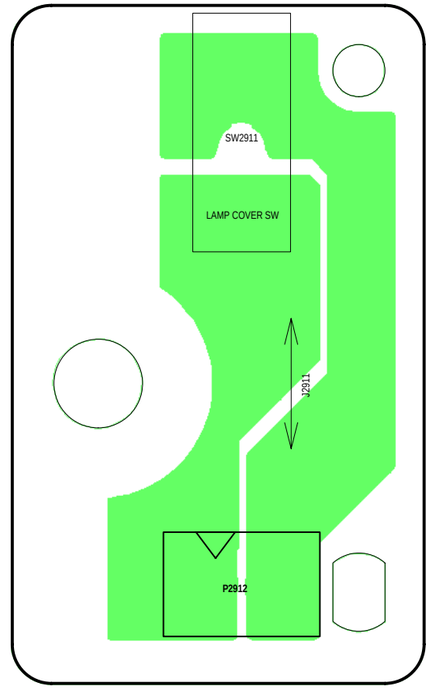

THERMISTOR 2 P.C.B. LSEP3137B

IMPORTANT SAFETY NOTICE:
COMPONENTS IDENTIFIED BY THE SIGN ⚠ HAVE SPECIAL CHARACTERISTICS IMPORTANT FOR SAFETY. WHEN REPLACING ANY OF THESE COMPONENTS, USE ONLY THE SPECIFIED PARTS.

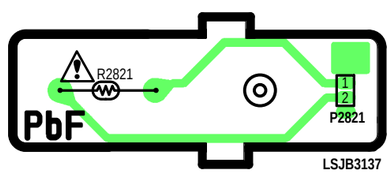

FRONT JACK / OPERATION P.C.B. LSEP3200A
POWER SWITCH P.C.B. LSEP3201A
THERMISTOR 2 P.C.B. LSEP3137B
COVER SWITCH P.C.B. LSEP3160A
PT-52LCX66/PT-56LCX66/PT-61LCX66/PT-52LCX16/PT-56LCX16

This manual downloaded from http://www.manualowl.com

This manual downloaded from http://www.manualowl.com

14 Exploded Views

14.1. MAIN PARTS SECTION

❶ 52 INCH MAIN PARTS SECTION (Models: A, D)

Note: Parts with no Ref. No. in "EXPLODED VIEW" are not supplied. And some Ref. No. will be skipped. Be sure to make your orders of replacement parts according to the parts list.

COMPARISON CHART OF MODELS & MARKS

MODEL	MARK
PT-52LCX66	A
PT-56LCX66	B
PT-61LCX66	C
PT-52LCX16	D
PT-56LCX16	E

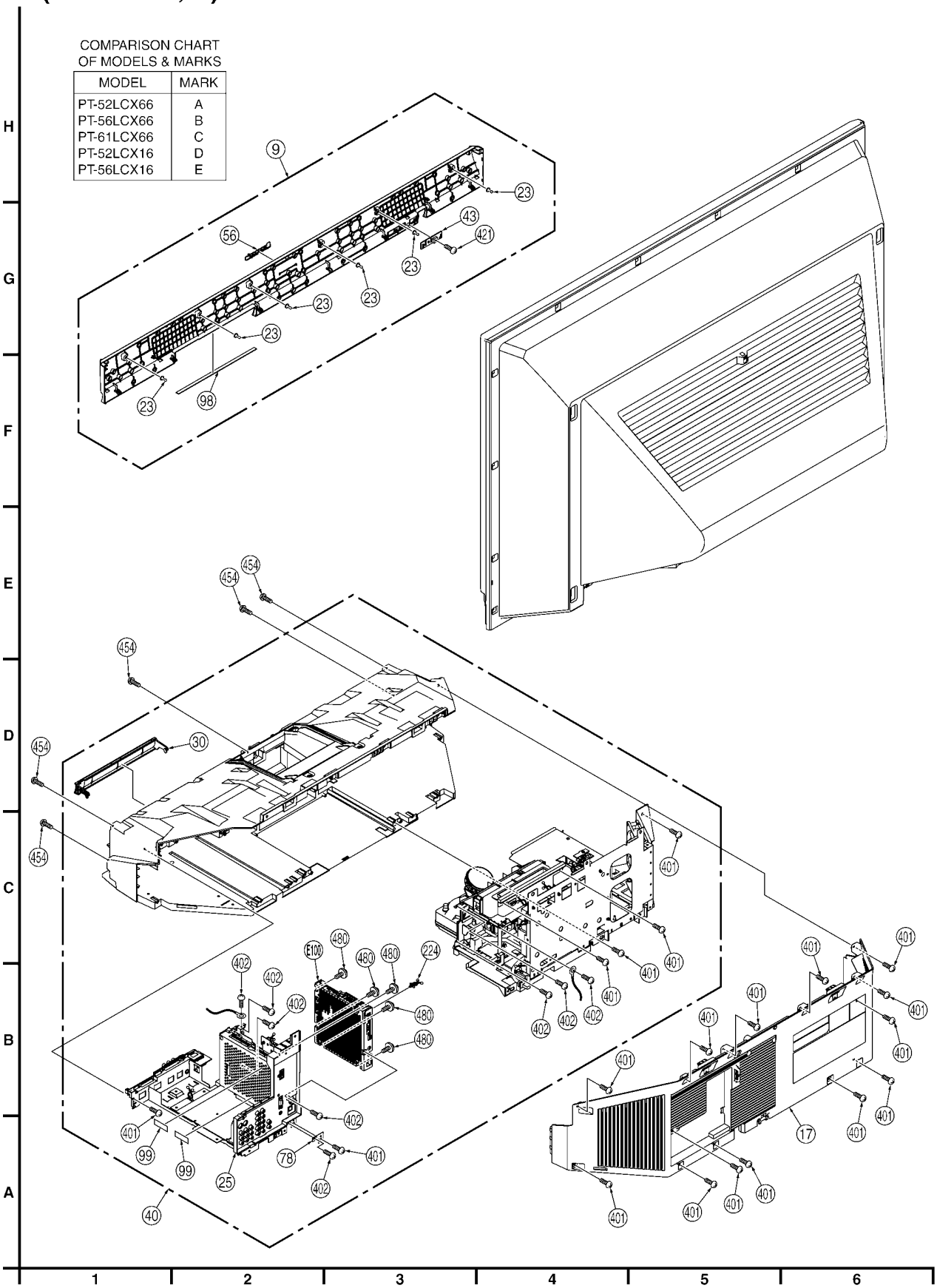

This manual downloaded from http://www.manualowl.com

❶ 56/61 INCH MAIN PARTS SECTION (Models: B, C, E)

COMPARISON CHART OF MODELS & MARKS

MODEL	MARK
PT-52LCX66	A
PT-56LCX66	B
PT-61LCX66	C
PT-52LCX16	D
PT-56LCX16	E

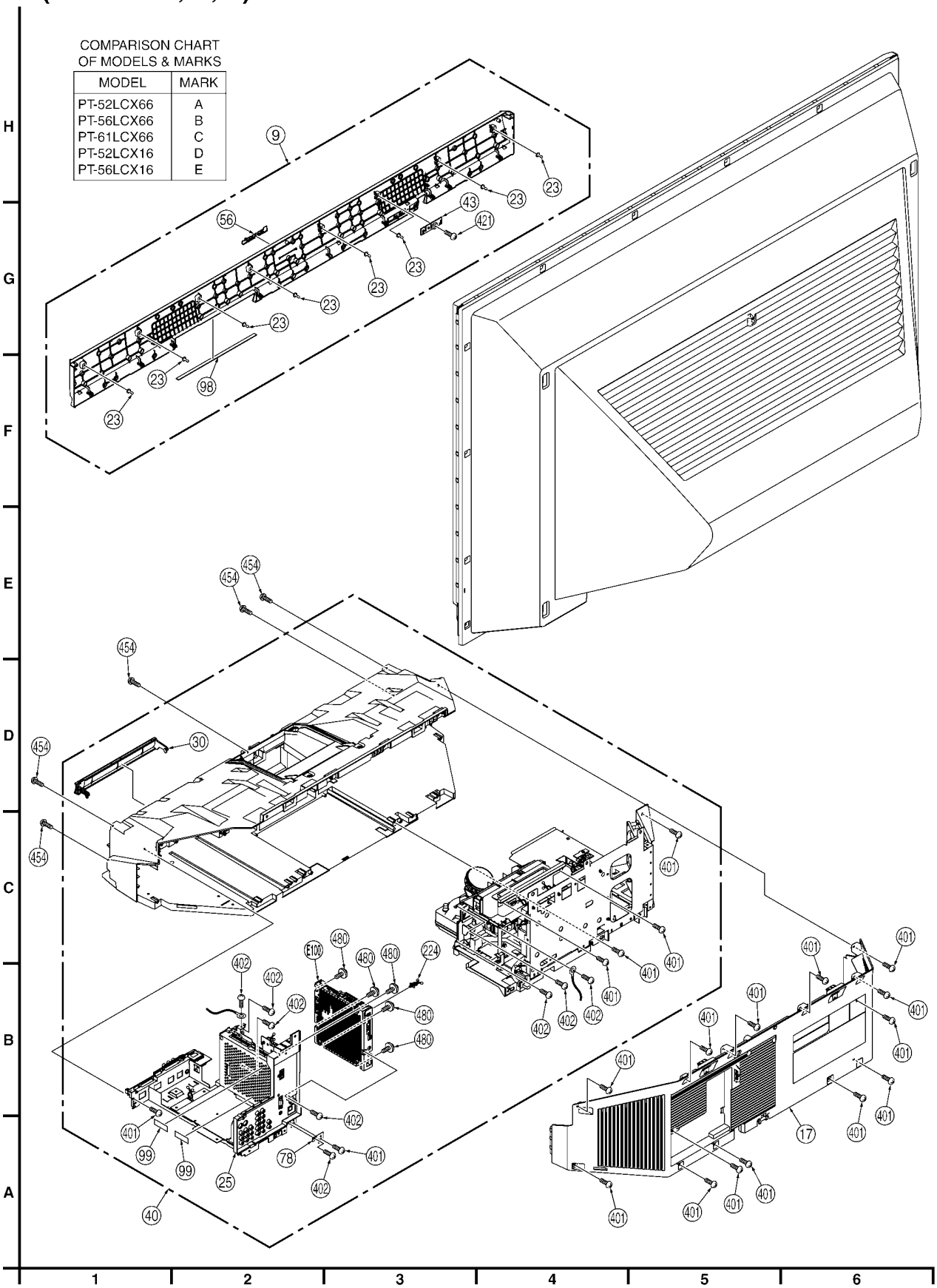

This manual downloaded from http://www.manualowl.com

14.2. BASE BODY SECTION

❷ BASE BODY SECTION

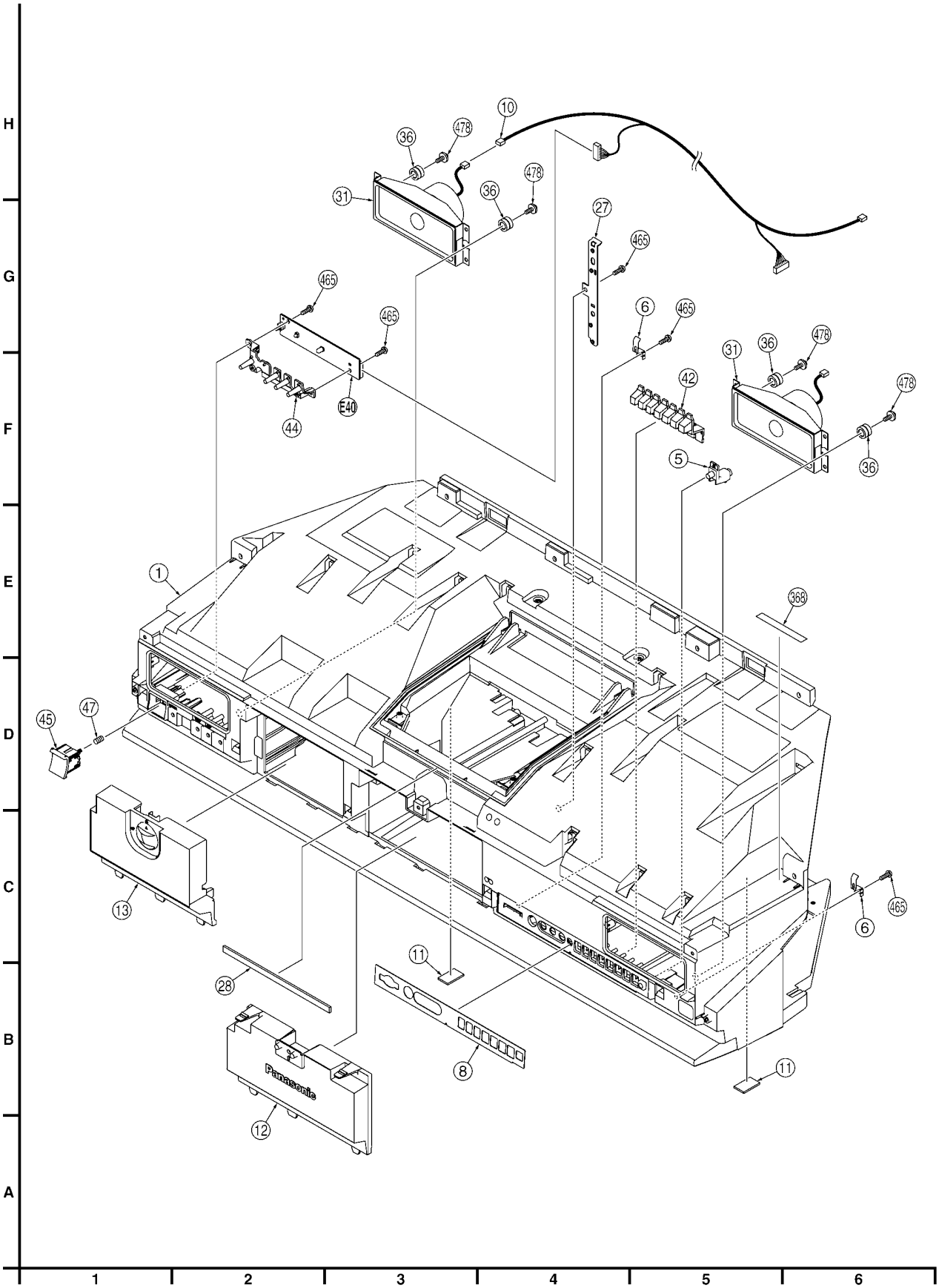

This manual downloaded from http://www.manualowl.com

14.3. DISPLAY SECTION

❸ 52 INCH DISPLAY SECTION (Models: A, D)

COMPARISON CHART OF MODELS & MARKS

MODEL	MARK
PT-52LCX66	A
PT-56LCX66	B
PT-61LCX66	C
PT-52LCX16	D
PT-56LCX16	E

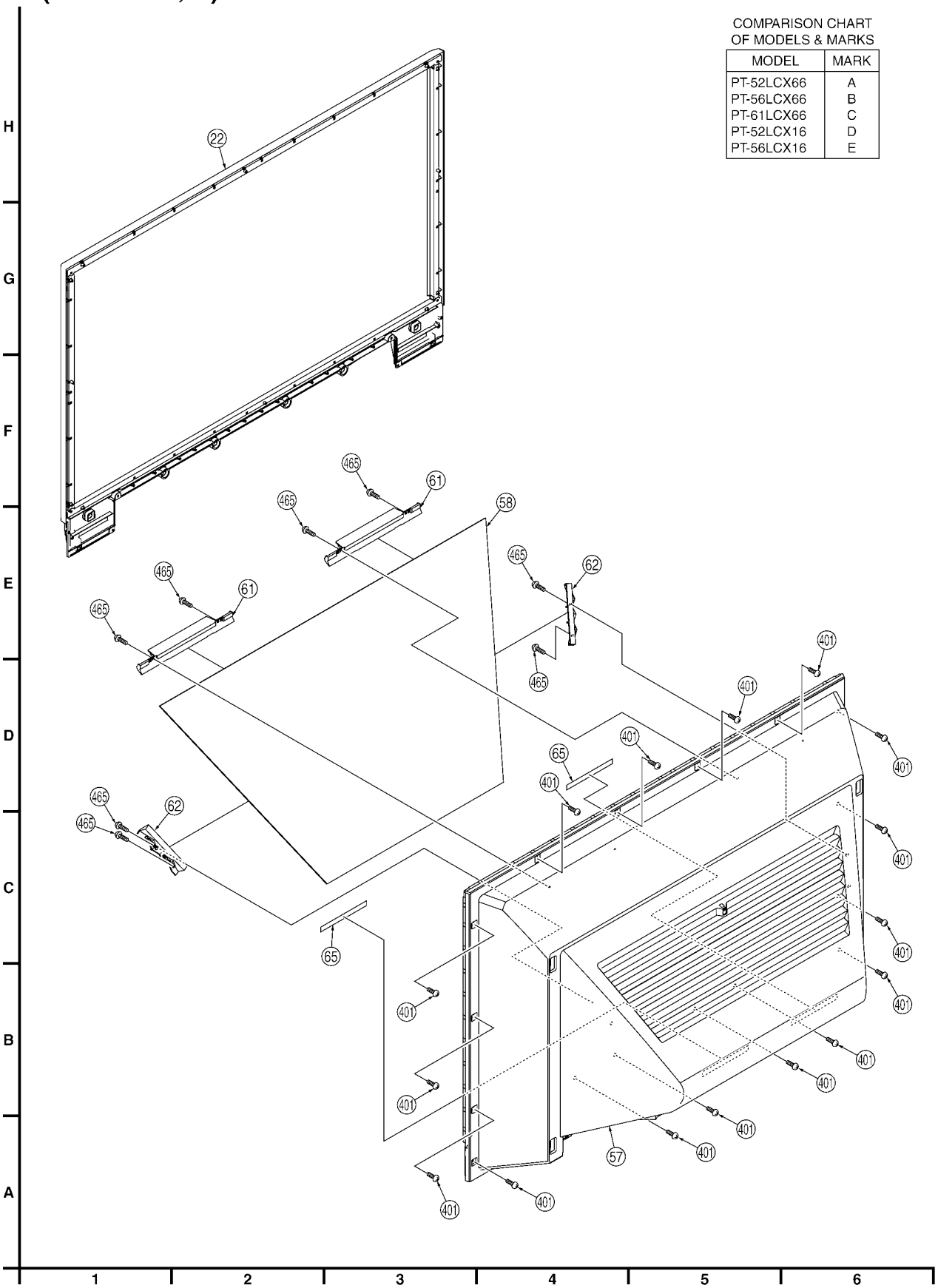

This manual downloaded from http://www.manualowl.com

❸ 56/61 INCH DISPLAY SECTION (Models: B, C, E)

COMPARISON CHART OF MODELS & MARKS

MODEL	MARK
PT-52LCX66	A
PT-56LCX66	B
PT-61LCX66	C
PT-52LCX16	D
PT-56LCX16	E

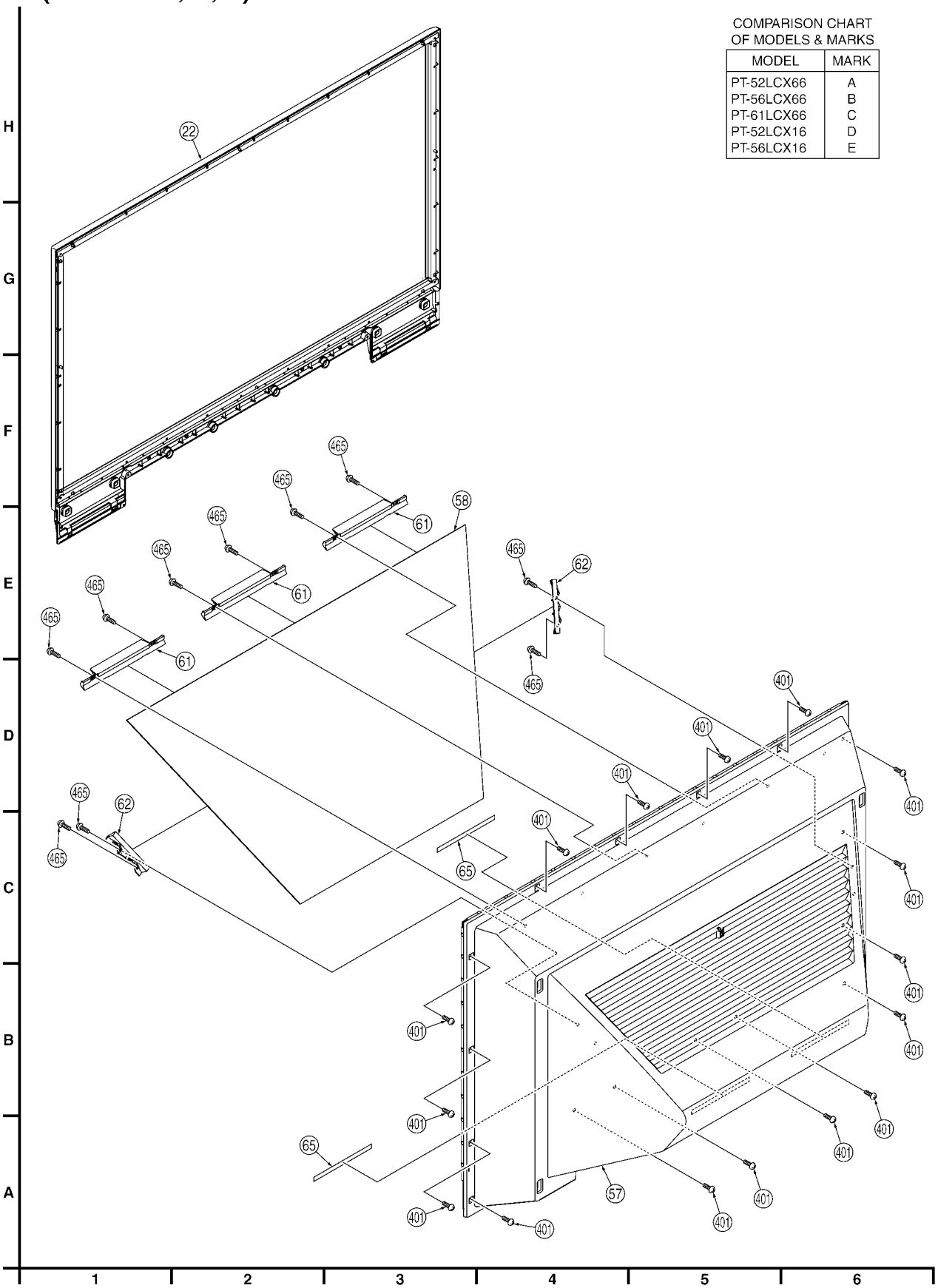

This manual downloaded from http://www.manualowl.com

14.4. SCREEN SECTION

❹ 52 INCH SCREEN SECTION (Models: A, D)

COMPARISON CHART OF MODELS & MARKS

MODEL	MARK
PT-52LCX66	A
PT-56LCX66	B
PT-61LCX66	C
PT-52LCX16	D
PT-56LCX16	E

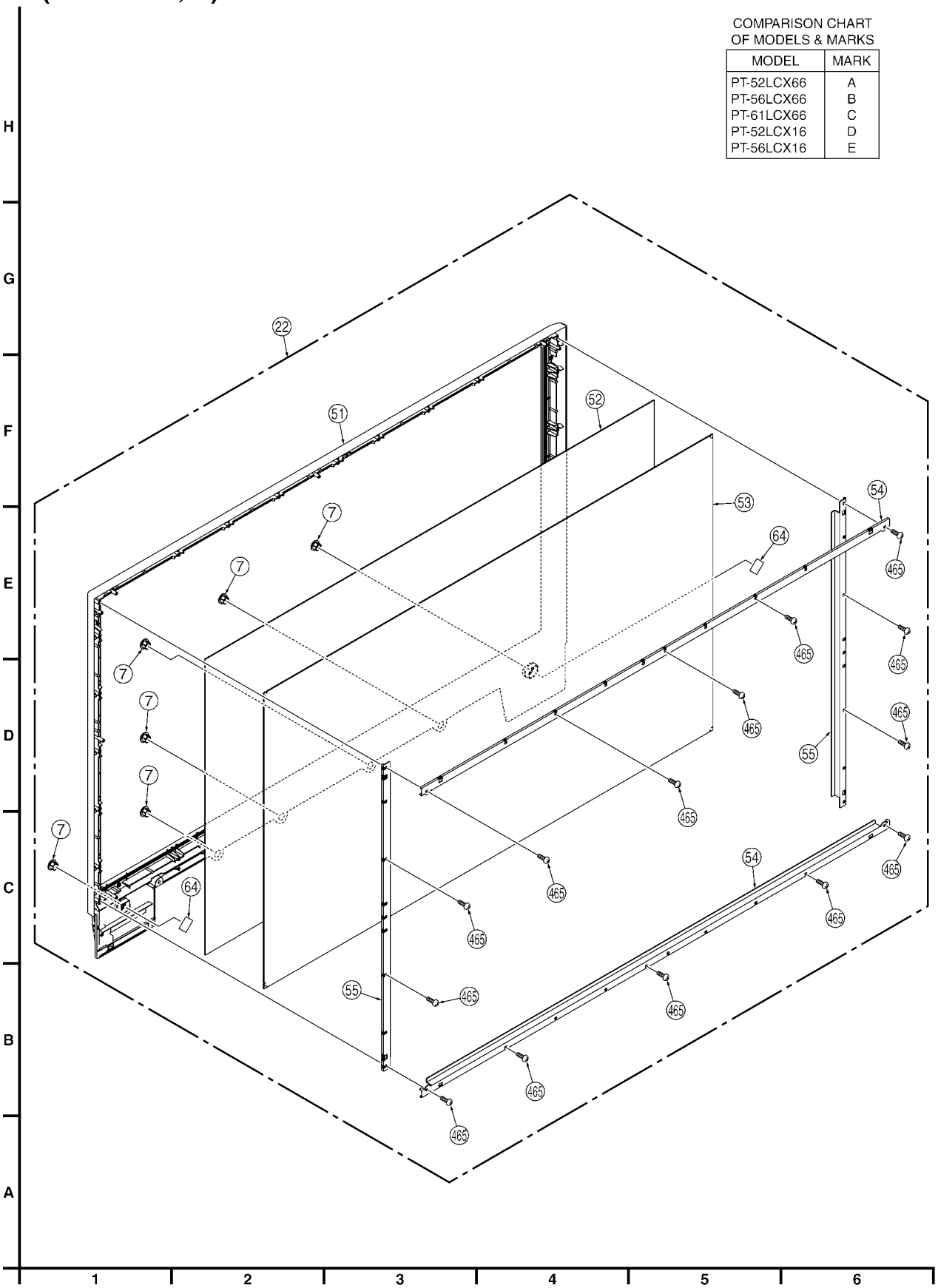

This manual downloaded from http://www.manualowl.com

❹ 56/61 INCH SCREEN SECTION (Models: B, C, E)

COMPARISON CHART OF MODELS & MARKS

MODEL	MARK
PT-52LCX66	A
PT-56LCX66	B
PT-61LCX66	C
PT-52LCX16	D
PT-56LCX16	E

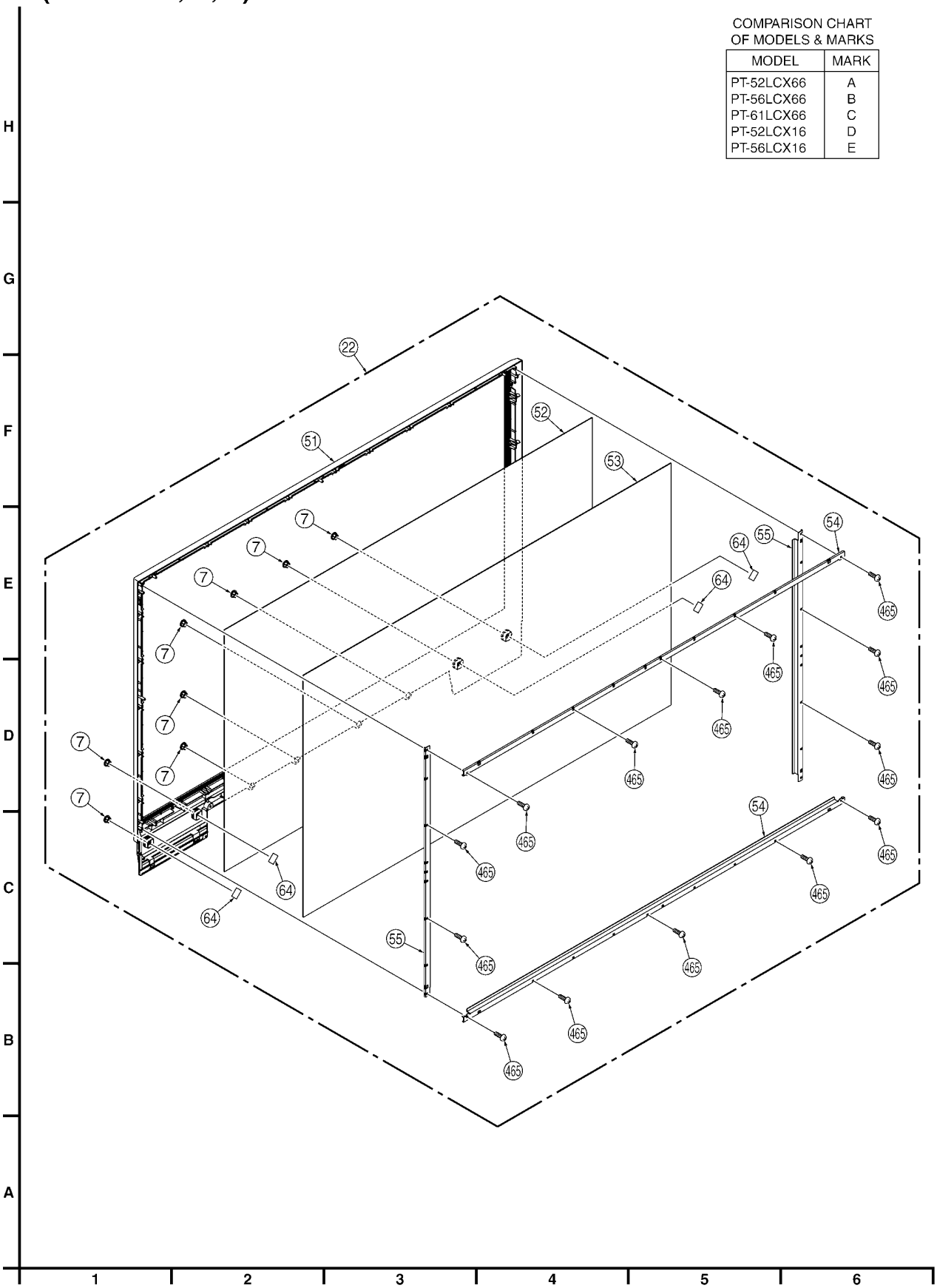

This manual downloaded from http://www.manualowl.com

14.5. PROJECTION SECTION

❺ PROJECTION SECTION

IMPORTANT SAFETY NOTICE
COMPONENTS IDENTIFIED BY THE SIGN ⚠ HAVE SPECIAL CHARACTERISTICS IMPORTANT FOR SAFETY. WHEN REPLACING ANY OF THESE COMPONENTS, USE ONLY THE SPECIFIED PARTS.

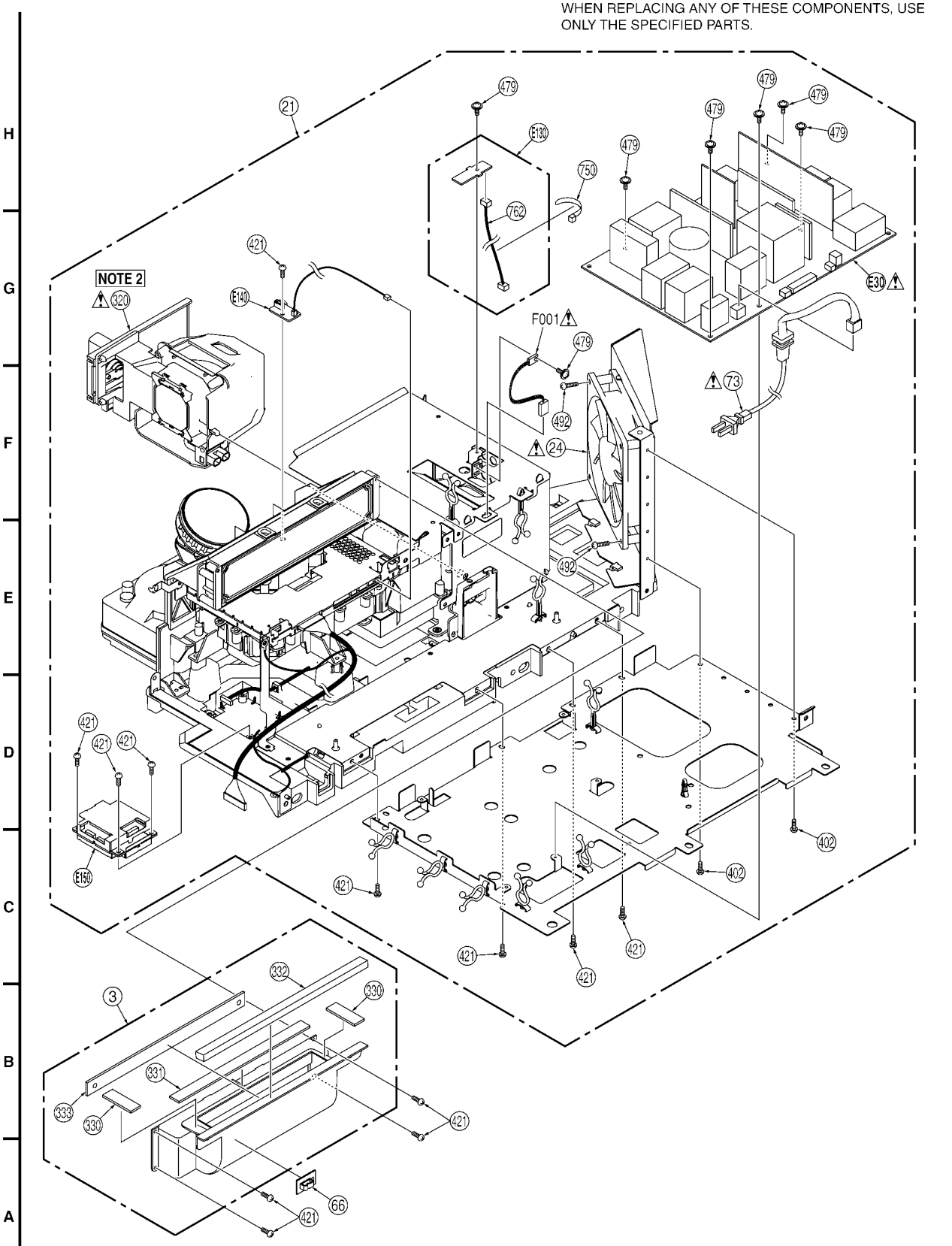

NOTE 2 The Lamp Unit (TY-LA1001) is not supplied as a replacement part. It is sold separately. To purchase a replacement, call the Panasonic accessory department.

This manual downloaded from http://www.manualowl.com

14.6. TV UNIT SECTION

❻ TV UNIT SECTION

COMPARISON CHART
OF MODELS & MARKS

MODEL	MARK
PT-52LCX66	A
PT-56LCX66	B
PT-61LCX66	C
PT-52LCX16	D
PT-56LCX16	E

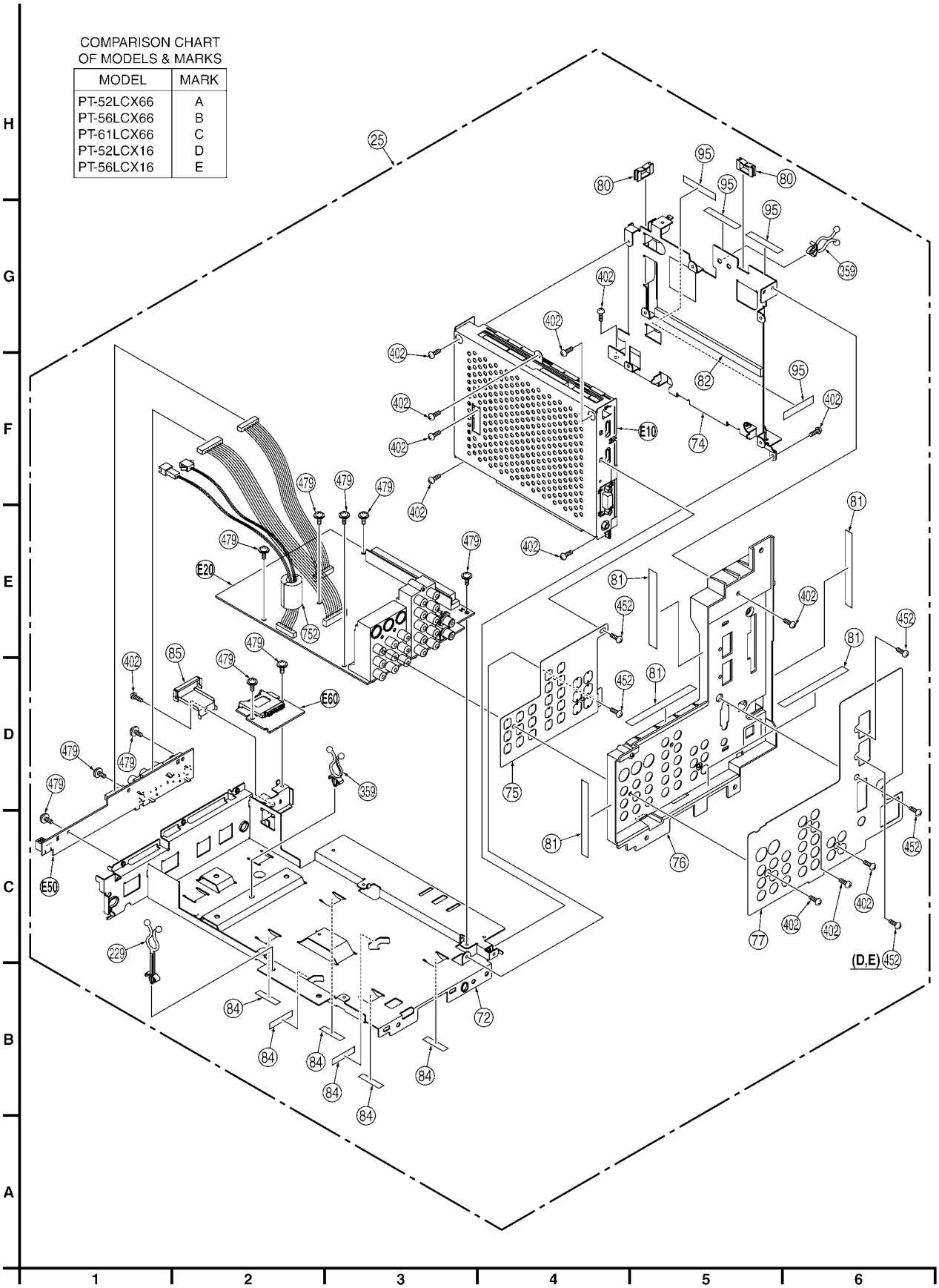

This manual downloaded from http://www.manualowl.com

14.7. PACKING PARTS AND ACCESSORIES SECTION

❼ PACKING PARTS AND ACCESSORIES SECTION

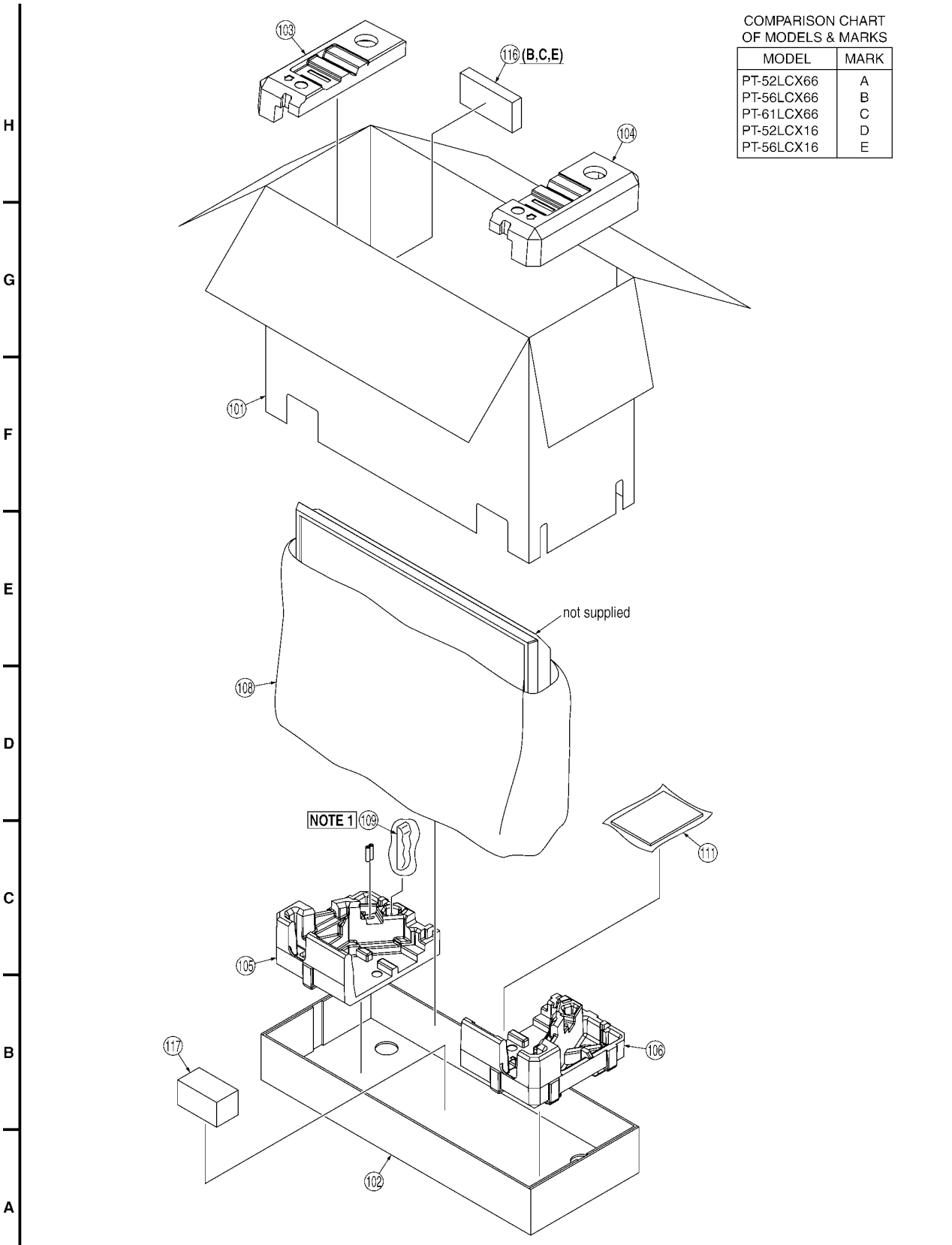

COMPARISON CHART OF MODELS & MARKS

MODEL	MARK
PT-52LCX66	A
PT-56LCX66	B
PT-61LCX66	C
PT-52LCX16	D
PT-56LCX16	E

NOTE 1 The Infrared Remote Control Unit (Ref. No. 109) replacement part is available as a complete assembly unit only. Do not try to disassemble the Infrared Remote Control Unit.

This manual downloaded from http://www.manualowl.com

15 Replacement Parts List

BEFORE REPLACING PARTS, READ THE FOLLOWING:

15.1. REPLACEMENT NOTES

15.1.1. General Notes

1. Use only original replacement parts:

   To maintain original function and reliability of repaired units, use only original replacement parts which are listed with their part numbers in the parts list.

2. **IMPORTANT SAFETY NOTICE**

   Components identified by the sign ⚠ have special characteristics important for safety. When replacing any of these components, use only the specified parts.

3. SPECIAL NOTE

   All integrated circuits and many other semiconductor devices are electrostatically sensitive and therefore require the special handling techniques described under the "ELECTROSTATICALLY SENSITIVE (ES) DEVICES" section of this service manual.

4. Parts with no Ref. No. in "EXPLODED VIEWS" are not supplied. And some Ref. No. will be skipped. Be sure to make your orders of replacement parts according to the parts list.

5. Parts different in shape or size may be used. However, only interchangeable parts will be supplied as service replacement parts.

6. Definition of Parts supplier:

   a. Parts with mark "PSEC" in the Remarks column are supplied from PSEC.

   b. Parts without mark in the Remarks column are supplied from PASC-NPC.

7. Item numbers with capital letter E (Example: E10, E20,...) in the Ref. No. column are shown in the exploded views.

8. Parts whose Ref. Nos. are the same are interchangeable as replacement parts. Any of these parts may be ordered and used as a replacement part.

15.1.2. Main Parts Replacement Notes

1. Section No. of parts shown in Exploded Views are indicated in the Remarks column.

2. Abbreviation

   RTL: Retention Time Limited

   This indicates that the retention time is limited for this item. After the discontinuation of this item in production, it will no longer be available.

3. After replacing the Projection Unit (Ref. No. 21) or the Base Body Unit (Ref. No. 40), be sure to perform "ADJUSTMENT of the Projection Unit." Refer to "WHEN REINSTALLING THE PROJECTION UNIT OR BASE BODY UNIT INTO THE UNIT AT THE USER´S LOCATION"; in Adjustment Procedures 1.

4. The Infrared Remote Control Unit (Ref. No. 109) replacement part is available as a complete assembly unit only. Do not try to disassemble the Infrared Remote Control Unit.

15.1.3. Electrical Replacement Notes

1. Unless otherwise specified;

   All resistors are in Ω, K = 1,000 Ω, M = 1,000 kΩ.

2. Abbreviation

RTL:	Retention Time Limited This indicates that the retention time is limited for this item. After the discontinuation of this item in production, it will no longer be available.
NR:	Non Repairable Board Ass´y
MGF CHIP:	Metal Glaze Film Chip
C CHIP:	Ceramic Chip
COMPLX CMP:	Complex Component
W FLMPRF:	Wirewound Flameproof
C.B.A.:	Circuit Board Assembly
P.C.B.:	Printed Circuit Board
E.S.D.:	Electrostatically Sensitive Devices

3. When replacing 0 Ω resistor, a wire can be substituted for it.

COMPARISON CHART OF MODELS & MARKS

MODEL	MARK
PT-52LCX66	A
PT-56LCX66	B
PT-61LCX66	C
PT-52LCX16	D
PT-56LCX16	E

This manual downloaded from http://www.manualowl.com

15.2. MECHANICAL REPLACEMENT PARTS LIST

COMPARISON CHART OF MODELS & MARKS

MODEL	MARK
PT-52LCX66	A
PT-56LCX66	B
PT-61LCX66	C
PT-52LCX16	D
PT-56LCX16	E

Definition of Parts supplier:

1. **Parts with mark "PSEC" in the Remarks column are supplied from PSEC.**
2. **Parts without mark in the Remarks column are supplied from PASC-NPC.**

MECHANICAL REPLACEMENT PARTS

Ref. No.	Part No.	Part Name & Description	Remarks
1	LSKU0041	BASE BODY	2
3	LSXA0683	TOP DUCT 3 UNIT	5
5	LSGL0499	IRFRARED PIECE	2
6	LSMC0151	PANEL SPRING	2
7	LSKC0008	LATCH	4
8	LSGH0069	FRONT JACK SHEET	2
9	LSYF0593	FRONT COVER UNIT (A,D)	1
9	LSYF0594	FRONT COVER UNIT (B,E)	1
9	LSYF0595	FRONT COVER UNIT (C)	1
10	LSJA0605	CONNECTOR CABLE W/PLUG	2
11	LSKA0031	RUBBER FOOT	2
12	LSYF0605	OPTICAL COVER UNIT	2
13	LSYK1831	LAMP COVER UNIT	2
17	LSYF0606	REAR COVER UNIT	1
21	LSXA0771-HB	PROJECTION UNIT (A,B,D,E)	5 RTL PSEC
21	LSXA0827-HB	PROJECTION UNIT (C)	5 RTL PSEC
22	LSYK1823	SCREEN UNIT (A)	3,4
22	LSYK1888	SCREEN UNIT (B) *Refer to “Replacement Note for 56 inch Screen Unit” in Disassembly and Assembly Instructions.	3,4
or 22	LSYK1871	SCREEN UNIT (B) *Refer to “Replacement Note for 56 inch Screen Unit” in Disassembly and Assembly Instructions.	3,4
22	LSYK1825	SCREEN UNIT (C)	3,4
22	LSYK1874	SCREEN UNIT (D)	3,4
22	LSYK1889	SCREEN UNIT (E) *Refer to “Replacement Note for 56 inch Screen Unit” in Disassembly and Assembly Instructions.	3,4
or 22	LSYK1872	SCREEN UNIT (E) *Refer to “Replacement Note for 56 inch Screen Unit” in Disassembly and Assembly Instructions.	3,4
23	TMM14414	STRIKE	1
25	LSXY0994	TV UNIT (A,B,C)	1,6 RTL
25	LSXY1035	TV UNIT (D,E)	1,6 RTL
27	LSSC0867	CONNECTING PLATE F,STEEL	2
28	LSMG0171	SPACER	2
30	LSYF0599	FRONT DOOR UNIT	1
31	EAS15S19A	LOUDSPEAKER	2
36	LSMG0169	RUBBER WASHER	2
40	LSVE0017	BASE BODY UNIT (A,B)	1 RTL
40	LSVE0020	BASE BODY UNIT (C)	1 RTL
40	LSVE0018	BASE BODY UNIT (D,E)	1 RTL
42	LSGU0724	OPERATION BUTTON	2
43	LSGL0447	FRONT LED PIECE	1
44	LSGL0500	POWER LED PIECE	2
45	LSGU0725	POWER BUTTON	2
47	LSMB0321	POWER BUTTON SPRING	2
51	LSGY0313	ESCUTCHEON (A)	4
51	LSYK1880	ESCUTCHEON UNIT (B)	4
51	LSYK1875	ESCUTCHEON UNIT (C)	4
51	LSGY0326	ESCUTCHEON (D)	4
51	LSYK1881	ESCUTCHEON UNIT (E)	4
52	LSGP0528	LENTICULAR SCREEN (A,D)	4
52	LSGP0548	LENTICULAR SCREEN (B,E) *Refer to “Replacement Note for 56 inch Screen Unit” in Disassembly and Assembly Instructions.	4
or 52	LSGP0502	LENTICULAR SCREEN (B,E) *Refer to “Replacement Note for 56 inch Screen Unit” in Disassembly and Assembly Instructions.	4
52	LSGP0532	LENTICULAR SCREEN (C)	4
53	LSGP0527	FRESNEL LENS (A,D)	4
53	LSGP0547	FRESNEL LENS (B,E) *Refer to “Replacement Note for 56 inch Screen Unit” in Disassembly and Assembly Instructions.	4
or 53	LSGP0501	FRESNEL LENS (B,E) *Refer to “Replacement Note for 56 inch Screen Unit” in Disassembly and Assembly Instructions.	4
53	LSGP0531	FRESNEL LENS (C)	4
54	LSXA0733	SCREEN ANGLE H UNIT (A,D)	4
54	LSXA0830	SCREEN ANGLE H UNIT (B,E) *Refer to “Replacement Note for 56 inch Screen Unit” in Disassembly and Assembly Instructions.	4
or 54	LSXA0825	SCREEN ANGLE H UNIT (B,E) *Refer to “Replacement Note for 56 inch Screen Unit” in Disassembly and Assembly Instructions.	4
54	LSXA0736	SCREEN ANGLE H UNIT (C)	4
55	LSXA0734	SCREEN ANGLE V UNIT (A,D)	4
55	LSXA0831	SCREEN ANGLE V UNIT (B,E) *Refer to “Replacement Note for 56 inch Screen Unit” in Disassembly and Assembly Instructions.	4
or 55	LSXA0826	SCREEN ANGLE V UNIT (B,E) *Refer to “Replacement Note for 56 inch Screen Unit” in Disassembly and Assembly Instructions.	4
55	LSXA0738	SCREEN ANGLE V UNIT (C)	4
56	LSGB0056	PANASONIC BADGE	1
57	LSGV0129	BACK COVER (A,D)	3
57	LSGV0130	BACK COVER (B,E)	3
57	LSGV0131	BACK COVER (C)	3
58	LSDL0310	MIRROR (A,D)	3
58	LSDL0311	MIRROR (B,E)	3
58	LSDL0312	MIRROR (C)	3
61	LSYF0602	MIRROR HOLDER H UNIT	3
62	LSYF0603	MIRROR HOLDER V UNIT	3
64	LSMF0505	SPACER	4
65	LSMF0499	SPACER (A,B,D,E)	3
65	LSMF0500	SPACER (C)	3
66	LSGP0372	CLAMPER	5
72	LSMA0923	BASE P.C.B. MOUNT METAL	6
73	LSJA0531	AC CORD W/PLUG	5 ⚠ PSEC
74	LSMA0924	MAIN P.C.B. MOUNT METAL	6
75	LSSC0877	REAR JACK GROUNDING PLATE,STEEL	6
76	LSJH0093	REAR JACK HOLDER	6
77	LSGH0070	REAR JACK SHEET (A,B,C)	6
77	LSGH0077	REAR JACK SHEET (D,E)	6

This manual downloaded from http://www.manualowl.com

Ref. No.	Part No.	Part Name & Description	Remarks
78	LSMC0150	CONNECTING PLATE R,STEEL	1
80	TMME075	EDGE SADDLE	6
81	LSGH0071	REAR JACK CUSHION	6
82	LSMF0524	CUSHION	6
84	LSGH0076	SHEET	6
85	LSSC0866	SD SHIELD CASE,STEEL	6
95	VMFS0116	SHEET	6
98	LSMF0509	DOOR SPACER	1
99	LSMF0469	SHEET	1
101	LSPG2209	CARTON BOX (A)	7
101	LSPG2210	CARTON BOX (B)	7
101	LSPG2211	CARTON BOX (C)	7
101	LSPG2290	CARTON BOX (D)	7
101	LSPG2291	CARTON BOX (E)	7
102	LSPG2212	CARTON BOX BOTTOM (A,D)	7
102	LSPG2213	CARTON BOX BOTTOM (B,E)	7
102	LSPG2214	CARTON BOX BOTTOM (C)	7
103	LSPN0703	CUSHION TOP-LEFT,STYROFORM (A,D)	7
103	LSPN0704	CUSHION TOP-LEFT,STYROFORM (B,E)	7
103	LSPN0705	CUSHION TOP-LEFT,STYROFORM (C)	7
104	LSPN0706	CUSHION TOP-RIGHT,STYROFORM (A,D)	7
104	LSPN0707	CUSHION TOP-RIGHT,STYROFORM (B,E)	7
104	LSPN0708	CUSHION TOP-RIGHT,STYROFORM (C)	7
105	LSPN0709	CUSHION BOTTOM-LEFT,STYROFORM (A,D)	7
105	LSPN0710	CUSHION BOTTOM-LEFT,STYROFORM (B,E)	7
105	LSPN0711	CUSHION BOTTOM-LEFT,STYROFORM (C)	7
106	LSPN0712	CUSHION BOTTOM-RIGHT,STYROFORM (A,D)	7
106	LSPN0713	CUSHION BOTTOM-RIGHT,STYROFORM (B,E)	7
106	LSPN0714	CUSHION BOTTOM-RIGHT,STYROFORM (C)	7
108	LSPF0111	BAG,POLYETHYLENE	7
109	EUR7613ZH0	INFRARED REMOTE CONTROL UNIT	7
111	LSQF1060	FAN BAG (A,B,C,E)	7
111	LSQF1060DE	FAN BAG (D)	7
116	LSPN0728	CUSHION CENTER,STYROFORM (B,C,E)	7
117	LSPN0729	CUSHION CENTER BOTTOM,STYROFORM	7
224	TMME047	CLAMPER	1
229	TMM16452	CLAMPER	6
330	LSMF0269	TOP DUCT 3 SPONGE 1	5
331	LSMF0270	TOP DUCT 3 SPONGE 2	5
332	LSMF0271	TOP DUCT 3 SPONGE 3	5
333	LSMF0272	TOP DUCT 3 SPONGE 4	5
359	LSGQ0176	CLAMPER	6
368	LSMF0435	SHEET	2
401	XTV4+16AFJ	TAPPING SCREW,STEEL	1,3
402	XTV3+8JFJ	TAPPING SCREW,STEEL	1,5,6
421	XTV3+8GFJ	TAPPING SCREW,STEEL	1,5
452	XTV3+8FFJ	TAPPING SCREW,STEEL	6
454	XTV4+16AFJK	TAPPING SCREW,STEEL	1
465	XTV4+12AFJ	TAPPING SCREW,STEEL	2,3,4
478	LSHD0099-FJ	SCREW W/WASHER,STEEL	2
479	XYE3+FJ8FJ	SCREW W/WASHER,STEEL	5,6
480	XTW3+8TFJ	TAPPING SCREW,STEEL	1
750	VZFS0006	CLAMPER	5 PSEC
752	LSLQ0307	FERRITE CORE	6
762	LSJA0533	CONNECTOR CABLE W/PLUG	5 PSEC
E10	LSXA0774	MAIN P.C.B. (A,B,C)	6 RTL
E10	LSXA0790	MAIN P.C.B. (D,E)	6 RTL
E20	LSEP3197A	BASE P.C.B. (A,B,C)	6 RTL
E20	LSEP3197C	BASE P.C.B. (D,E)	6 RTL
E30	LSEP1206A1	POWER P.C.B.	5 ⚠ RTL PSEC
E40	LSEP3201A	POWER SWITCH P.C.B.	2 RTL
E50	LSEP3200A	FRONT JACK/OPERATION P.C.B.	6 RTL
E60	LSEP3199A	SD CARD P.C.B.	6 RTL
E100	LSEP3207F	DIGITAL TUNER P.C.B.	1 RTL
E130	LSEP3137B	THERMISTOR 2 P.C.B.	5 RTL PSEC
E140	LSEP3160A	COVER SWITCH P.C.B.	5 RTL PSEC
E150	LSXA0773	IRIS P.C.B.	5 RTL PSEC
24	L6FAYYYH0015	FAN 3	5 ⚠
492	XTV3+30JFJ	TAPPING SCREW,STEEL	5

15.3. OPTIONAL ACCESSORY REPLACEMENT PARTS LIST

15.3.1. LAMP UNIT

Ref. No.2	Part No.	Part Name & Description	Remarks
320	TY-LA1001	LAMP UNIT	5 ⚠ NOTE

NOTE:

The Lamp Unit (TY-LA1001) is not supplied as a replacement part. It is sold separately. To purchase a replacement, call the Panasonic accessory department.

15.4. ELECTRICAL REPLACEMENT PARTS LIST

COMPARISON CHART OF MODELS & MARKS

MODEL	MARK
PT-52LCX66	A
PT-56LCX66	B
PT-61LCX66	C
PT-52LCX16	D
PT-56LCX16	E

Definition of Parts supplier:

1. **Parts with mark "PSEC" in the Remarks column are supplied from PSEC.**
2. **Parts without mark in the Remarks column are supplied from PASC-NPC.**

PRINTED CIRCUIT BOARD ASSEMBLY

Ref. No.	Part No.	Part Name & Description	Remarks
E10	LSXA0774	MAIN P.C.B. (A,B,C)	E.S.D. RTL
E10	LSXA0790	MAIN P.C.B. (D,E)	E.S.D. RTL
E20	LSEP3197A	BASE P.C.B. (A,B,C)	E.S.D. RTL
E20	LSEP3197C	BASE P.C.B. (D,E)	E.S.D. RTL
E30	LSEP1206A1	POWER P.C.B.	⚠ E.S.D. RTL PSEC
E40	LSEP3201A	POWER SWITCH P.C.B.	RTL
E50	LSEP3200A	FRONT JACK/OPERATION P.C.B.	RTL
E60	LSEP3199A	SD CARD P.C.B.	RTL
E100	LSEP3207F	DIGITAL TUNER P.C.B.	ES.D. RTL

This manual downloaded from http://www.manualowl.com

Ref. No.	Part No.	Part Name & Description	Remarks
E130	LSEP3137B	THERMISTOR 2 P.C.B.	RTL PSEC
E140	LSEP3160A	COVER SWITCH P.C.B.	RTL PSEC
E150	LSXA0773	IRIS P.C.B.	RTL PSEC

15.4.1. POWER SWITCH P.C.B.

TRANSISTORS

Ref. No.	Part No.	Part Name & Description	Remarks
Q6802	2SB1218A0L	TRANSISTOR SI PNP CHIP	
or Q6802	B1ADCF000063	TRANSISTOR SI PNP CHIP	
or Q6802	B1ADCF000075	TRANSISTOR SI PNP CHIP	
Q6803	2SB1218A0L	TRANSISTOR SI PNP CHIP	
or Q6803	B1ADCF000063	TRANSISTOR SI PNP CHIP	
or Q6803	B1ADCF000075	TRANSISTOR SI PNP CHIP	
Q6804	2SD1819A0L	TRANSISTOR SI NPN CHIP	
or Q6804	B1ABCF000020	TRANSISTOR SI NPN CHIP	
Q6805	2SD1819A0L	TRANSISTOR SI NPN CHIP	
or Q6805	B1ABCF000020	TRANSISTOR SI NPN CHIP	

DIODES

Ref. No.	Part No.	Part Name & Description	Remarks
D6801	B3AGA0000072	LIGHT EMITTING DIODE GREEN	
D6802	B3AAA0000538	LIGHT EMITTING DIODE RED	
D6803	B3AAA0000538	LIGHT EMITTING DIODE RED	

RESISTORS

Ref. No.	Part No.	Part Name & Description	Remarks
R6801	ERJ3GEYJ103V	MGF CHIP 1/16W 10K	
R6802	ERJ3GEYJ103V	MGF CHIP 1/16W 10K	
R6803	ERJ3GEYJ181V	MGF CHIP 1/16W 180	
R6804	ERJ3GEYJ101V	MGF CHIP 1/16W 100	
R6805	ERJ3GEYJ103V	MGF CHIP 1/16W 10K	
R6806	ERJ3GEYJ103V	MGF CHIP 1/16W 10K	
R6807	ERJ3GEYJ103V	MGF CHIP 1/16W 10K	
R6808	ERJ3GEYJ103V	MGF CHIP 1/16W 10K	
R6809	ERJ3GEYJ103V	MGF CHIP 1/16W 10K	
R6810	ERJ3GEYJ103V	MGF CHIP 1/16W 10K	
R6811	ERJ3GEYJ471V	MGF CHIP 1/16W 470	
R6812	ERJ3GEYJ471V	MGF CHIP 1/16W 470	

PIN HEADER

Ref. No.	Part No.	Part Name & Description	Remarks
CN6801	K1KA08BA0061	CONNECTOR 8P	

SWITCH

Ref. No.	Part No.	Part Name & Description	Remarks
SW6801	EVQ11G05R	SWITCH PUSH	

15.4.2. FRONT JACK/OPERATION P.C.B.

RESISTORS

Ref. No.	Part No.	Part Name & Description	Remarks
R3901	ERJ3GEYJ750V	MGF CHIP 1/16W 75	
R3902	ERJ3GEYJ750V	MGF CHIP 1/16W 75	
R3903	ERJ3GEYJ750V	MGF CHIP 1/16W 75	
R3904	ERJ3GEYJ101V	MGF CHIP 1/16W 100	
R6701	ERJ3GEYJ101V	MGF CHIP 1/16W 100	
R6702	ERJ3GEYJ122V	MGF CHIP 1/16W 1.2K	
R6703	ERJ3GEYJ152V	MGF CHIP 1/16W 1.5K	
R6704	ERJ3GEYJ272V	MGF CHIP 1/16W 2.7K	
R6705	ERJ3GEYJ562V	MGF CHIP 1/16W 5.6K	
R6706	ERJ3GEYJ183V	MGF CHIP 1/16W 18K	
R6707	ERJ3GEYJ122V	MGF CHIP 1/16W 1.2K	

CAPACITOR

Ref. No.	Part No.	Part Name & Description	Remarks
C6701	ECEA0JKS470I	ELECTROLYTIC 6.3V 47UF	

COILS

Ref. No.	Part No.	Part Name & Description	Remarks
L3901	ERJ3GEY0R00V	MGF CHIP 1/16W 0	
L3902	ERJ3GEY0R00V	MGF CHIP 1/16W 0	
L3903	ERJ3GEY0R00V	MGF CHIP 1/16W 0	
L3904	ERJ3GEY0R00V	MGF CHIP 1/16W 0	
L3905	ERJ3GEY0R00V	MGF CHIP 1/16W 0	
L6701	ERJ3GEY0R00V	MGF CHIP 1/16W 0	

PIN HEADERS

Ref. No.	Part No.	Part Name & Description	Remarks
CN3901	K1KA12BA0062	CONNECTOR 12P	
CN6701	K1KA07BA0061	CONNECTOR 7P	

SWITCHES

Ref. No.	Part No.	Part Name & Description	Remarks
SW6702	EVQ11G05R	SWITCH PUSH	
SW6703	EVQ11G05R	SWITCH PUSH	
SW6704	EVQ11G05R	SWITCH PUSH	
SW6705	EVQ11G05R	SWITCH PUSH	
SW6706	EVQ11G05R	SWITCH PUSH	
SW6707	EVQ11G05R	SWITCH PUSH	
SW6708	EVQ11G05R	SWITCH PUSH	

JACK

Ref. No.	Part No.	Part Name & Description	Remarks
JK3901	K1U412A00008	AUDIO/VIDEO/S-VIDEO JACK SOCKET	

MISCELLANEOUS

Ref. No.	Part No.	Part Name & Description	Remarks
RM6701	PNA4618M14VT	INFRARED RECEIVER UNIT	

15.4.3. THERMISTOR 2 P.C.B.

RESISTOR

Ref. No.	Part No.	Part Name & Description	Remarks
R2821	D4CE31330001	THERMISTOR	⚠ PSEC

PIN HEADER

Ref. No.	Part No.	Part Name & Description	Remarks
P2821	K1KA02AA0300	CONNECTOR 2P	PSEC

MISCELLANEOUS

Ref. No.	Part No.	Part Name & Description	Remarks
762	LSJA0533	CONNECTOR CABLE W/PLUG	PSEC

15.4.4. COVER SWITCH P.C.B.

PIN HEADER

Ref. No.	Part No.	Part Name & Description	Remarks
P2912	LSJA0551	CONNECTOR CABLE W/PLUG	PSEC

SWITCH

Ref. No.	Part No.	Part Name & Description	Remarks
SW2911	K0L1BA000114	SWITCH	PSEC

This manual downloaded from http://www.manualowl.com

15.4.5. ELECTRICAL PARTS LOCATED ON CHASSIS

FUSE & PROTECTOR

Ref. No.	Part No.	Part Name & Description	Remarks
F001	LSJA0583	THERMAL FUSE UNIT	⚠ PSEC

This manual downloaded from http://www.manualowl.com